THE TOPOLOGY OF REAL ALGEBRAIC SETS

L'Enseignement Mathématique, t. 29 (1983), p. 221-261

THE TOPOLOGY OF REAL ALGEBRAIC SETS [1])

by Selman AKBULUT and Henry KING [2])

Cat

Real algebraic sets have been long studied. However after the emergence of modern algebraic geometry they have been ignored; because some fundamental tools such as the Nullstellensatz don't apply to real algebraic sets. Fortunately in recent years this pessimism has been dispersed with the realization that real algebraic sets enjoy some topological advantages over complex algrebraic ones. The fundamental problem in real algebraic sets is the topological classification problem. The goal is to give a class of topologically defined spaces $\mathscr{R}$ such that the underlying topological space $|V|$ of any algebraic set V lies in $\mathscr{R}$ and the forgetful map τ is onto

$$\{\text{algebraic sets}\} \xrightarrow{\tau} \mathscr{R}$$

Namely, every element of $\mathscr{R}$ is realized by some algebraic set. Then the combinatorial characterization of real algebraic sets will reduce to the combinatorial characterization of $\mathscr{R}$. $\tau^{-1}(X)$ will be the moduli space of algebraic structures on X. We feel that the solution of this problem is now within reach. In section §6 we give a candidate for $\mathscr{R}$ (a class of topologically resolvable spaces) such that τ is defined, and τ is onto under certain restrictions. It is hoped that these restrictions do not exist. A nice aspect of this is that one can use [Su_2] to give cohomological obstructions for deciding whether a Thom stratified space lies in $\mathscr{R}$.

The algebraic structures on manifolds are better understood. In 1936 Seifert showed that any closed smooth stably parallelizable manifold is diffeomorphic to a component of a nonsingular real algebraic set [S]. Then in a beautiful paper in 1952 Nash extended this result to all closed smooth manifolds [N]. In 1973 Tognoli sharpened Nash's result by showing that all closed smooth manifolds are diffeomorphic to nonsingular real algebraic sets [To]. Later in [K_1] a projective version of this result was proven. Recently nonsingular algebraic sets were completely classified; it was shown in [AK_2] that up to diffeomorphism nonsingular algebraic sets are exactly the interiors of compact smooth manifolds

---

[1]) This article has already been published in *Nœuds, tresses et singularités*, Monographie de l'Enseignement Mathématique N° 31, Genève 1983, p. 7-47.

[2]) Both authors were supported in part by N.S.F. grants.

with boundary (possibly empty). Since all closed P.L. manifolds of dimension less than 8 have smooth structures they are homeomorphic to algebraic sets. In 1968 Kuiper [Ku] extended Nash's result to all 8 dimensional closed P.L. manifolds. Later in [A] it was shown that all 8-dimensional closed P.L. manifolds as well as a larger class of nonsmoothable polyhedra are homeomorphic to real algebraic sets. All these results use transversality and local piecing techniques which in general does not work when dealing with singular spaces. In [AK_1], [AK_2], [AK_5] a resolution technique was introduced. Namely, by constructing a "topological" resolution of a singular space one gets a smooth manifold, then by isotoping this to a nonsingular algebraic set and algebraically blowing it down, one puts an algebraic structure on the original singular space. Using this in [AK_2] a complete topological characterization for algebraic sets with isolated singularities was given. Later it was established that the interior of all compact P.L. manifolds are P.L. homeomorphic to real algebraic sets; in fact these algebraic structures are classified up to topological concordances [AK_6], [AT_2].

In this paper we give an overview of these results. For the sake of harmony we sketch proofs when possible. We have reproduced some of [AK_7] since it has not appeared in print. The last section (§6) is a summary of our ongoing work; so it is somewhat tentative. We hope to give a more complete and final account in [AK_9]. The first named author would like to thank C. Weber and M. Kervaire for their hospitality during this conference in Switzerland.

§0. Introduction

A *real algebraic set* V is a set of the form

$$V(I) = \quad x \in R^n \mid p(x) = 0, p \in I\}$$

where I is a set of polynomial functions from $\mathbf{R}^n$ to $\mathbf{R}$. We can write any algebraic set $V = p^{-1}(0)$ where $p(x)$ is a single polynomial (p is the sum of the square of the generators of I). $V(J)$ is called an *algebraic subset* of $V(I)$ if $I \subset J$. An algebraic set V is called *irreducible* if it can not be written as a union of two algebraic sets $V_1 \cup V_2$ with each $V_i \neq V$. If V is an algebraic set then $I(V)$ denotes the ideal of polynomials vanishing on V. A point $x \in V$ is called *nonsingular of dimension* d if there is a polynomial function $p: \mathbf{R}^n \to \mathbf{R}^{n-d}$ vanishing on V and an open neighborhood U of x with the property that $\operatorname{rank}(dp) = n - d$ on U and $p^{-1}(0) \cap U = V \cap U$. $\dim(V)$ is defined to be the largest d such that there is a $x \in V$ of nonsingular of dimension d. Nonsing(V) is the set of all $x \in V$ which are

nonsingular of dimension $\dim(V)$. Then we define $\mathrm{Sing}(V) = V - \mathrm{Nonsing}(V)$. An interesting fact is that if W and V are nonsingular algebraic sets of the same dimensions with $W \subset V$ then $V - W$ is a nonsingular algebraic set (Lemma 1.6 of [AK$_2$]).

For any set $A \subset \mathbf{R}^n$ the Zariski closure $\bar{A}$ of A is defined to be the smallest algebraic set containing A. Given algebraic sets $V \subset \mathbf{R}^n$ and $W \subset \mathbf{R}^m$ a function $f: V \to W$ is called an *entire rational function* if $f(x) = p(x)/q(x)$ where $p: \mathbf{R}^n \to \mathbf{R}^m$, $q: \mathbf{R}^n \to \mathbf{R}$ are polynomials such that q does not vanish on V. A diffeomorphism $f: V \to W$ is called a *birational diffeomorphism* if f and f^{-1} are entire rational functions.

Consider $E(n, k) \xrightarrow{p} G(n, k)$ where $G(n, k)$ is the Grassmann manifold of k-planes in $\mathbf{R}^n$ $E(n, k)$ is the universal bundle over $G(n, k)$. These universal manifolds are nonsingular algebraic sets in a natural way

$$G(n, k) = \{A \in \mathscr{M}_n \mid A = A^t, A^2 = A, \mathrm{trace}(A) = k\}$$
$$E(n, k) = \{(A, x) \in G(n, k) \times \mathbf{R}^n \mid Ax = x\}$$

where $\mathscr{M}_n$ is the space of $(n \times n)$ matrices $(= \mathbf{R}^{n^2})$ and $p(A, x) = A$. For a given pair of nonsingular algebraic sets $M \subset V \subset \mathbf{R}^n$ of dimensions m and v, the usual functions

$$f: M \to G(n, v-m), \qquad g: M \to G(n, m),$$

$f(x) =$ the $(v-m)$-plane tangent to V and normal to M at x, $g(x) =$ the m-plane tangent to M at x are entire rational functions (see [AK$_2$], [AK$_3$]). There is a birational diffeomorphism $\theta: \mathbf{RP}^{n-1} \to G(n, 1)$ given by $\theta[x_1; \ldots; x_n] = (a_{ij})$ where $a_{ij} = \dfrac{x_i x_j}{\Sigma x_i^2}$. Then $V \subset \mathbf{RP}^{n-1}$ is a projective algebraic set if and only if $\theta(V)$ is an algebraic subset of $G(n, 1) \subset \mathbf{R}^{n^2}$. Hence every projective algebraic set is an afine algebraic set and vice versa.

In real algebraic geometry locally defined entire rational functions are globally defined. This property does not hold in the complex case.

LEMMA 0.1. *Let $\{V_i\}_{i=1}^k$ be disjoint algebraic subsets of an algebraic set V, and $f_i: V_i \to \mathbf{R}^n$ be entire rational functions. Then there exists an entire rational function $f: V \to \mathbf{R}^n$ with $f|_{V_i} = f_i$.*

Proof: It suffices to prove this for $k = 2$. Write $f_i = p_i/q_i$ where p_i, q_i are polynomials with $q_i \neq 0$ on V_i, let $V_i = h_i^{-1}(0)$ for some polynomials h_i. Then

$$f = \frac{1}{h_1^2 + h_2^2}\left(\frac{p_2 q_2 h_1^2}{q_2^2 + h_2^2} + \frac{p_1 q_1 h_2^2}{q_1^2 + h_1^2}\right). \qquad \square$$

An important property of real algebraic sets is the complexification. For any real algebraic set $V \subset \mathbf{R}^n$ one can associate a complex algebraic set $V_{\mathbf{C}} \subset \mathbf{C}^n$ by taking the smallest complex algebraic set containing V (recall $\mathbf{R}^n \subset \mathbf{C}^n$). $\dim(V_{\mathbf{C}}) = 2\dim(V)$ as real algebraic sets. The complex conjugation on $V_{\mathbf{C}}$ induced from $\mathbf{C}^n$ defines an involution $j: V_{\mathbf{C}} \to V_{\mathbf{C}}$ with fixed point set V. This property imposes some topological restrictions on V. Any $x \in V$ has a well defined link $L(x) = S_\varepsilon \cap V$, where S_ε is a sphere of radius ε centered at x for a sufficiently small ε (recall algebraic sets are locally cone-like [M]). In [Su_1] Sullivan observed that for any $x \in V$ the Euler characteristic $\chi(L(x))$ of $L(x)$ is even. This follows from $\chi(L(x)) = \chi(L_{\mathbf{C}}(x)) = 0 \pmod 2$, where $L_{\mathbf{C}}(x)$ is the link of x in $V_{\mathbf{C}}$. The first equality holds since $L(x)$ is the fixed point set of the involution j on $L_{\mathbf{C}}(x)$, the second equality holds since $L_{\mathbf{C}}(x)$ is a stratified space with only odd dimensional strata. Algebraic sets are triangulated [Lo] and the local even Euler characteristic condition implies that the sum of k-simplexes of a compact k-dimensional algebraic set V^k is a cycle $[V] \in H_k(V; \mathbf{Z}/2\mathbf{Z})$ which we call the fundamental cycle. If V is connected then $H_k(V; \mathbf{Z}/2\mathbf{Z}) \cong \mathbf{Z}/2\mathbf{Z}$ and $[V]$ is the generator. This enables us to construct various polyhedra which can not be algebraic sets. For example let $X = S^1 \underset{f}{\cup} D^2$ where f is the degree 3 map $f: \partial D^2 \to S^1$. Then X can not even be homology equivalent to a 2-dimensional algebraic set since $H_2(X; \mathbf{Z}/2\mathbf{Z}) = 0$. The unreduced suspension Y of $\mathbf{RP}^2$ can not be homeomorphic to an algebraic set since it violates Sullivan's condition. However the reduced suspension $\bar{Y}$ of $\mathbf{RP}^2$, obtained from Y by collapsing an arc running from the north pole to the south pole, is homeomorphic to an algebraic set (since $\bar{Y}$ is an A_1-space, see §5). Hence unlike the first example Y is homotopy equivalent to an algebraic set.

Another useful property of real algebraic sets coming from complexification was observed by Benedetti and Tognoli [BT_1]. They noticed that if a closed smooth manifold M is a diffeomorphic image of a nonsingular algebraic set under an algebraic map, then $\bar{M} - M$ has dimension less than $\dim(M)$ where $\bar{M}$ denotes the Zariski closure of M. This can be easily generalized to:

LEMMA 0.2. *If $f: X \to \mathbf{R}^m$ is an entire rational function from an irreducible algebraic set such that $\chi(f^{-1}(x))$ is odd for a dense set of points $x \in f(X)$, then*

$$\dim(\overline{f(X)} - f(X)) < \dim f(X).$$

Proof: First replace X by the graph of f, then we can assume that $X \subset \mathbf{R}^n \times \mathbf{R}^m$ for some n and f is induced by the projection π to $\mathbf{R}^m$. By projectivizing we can replace $\mathbf{R}^n$ and $\mathbf{R}^m$ by $\mathbf{RP}^n$ and $\mathbf{RP}^m$ above (i.e. imbed them as charts).

Consider $X_{\mathbf{C}} \subset \mathbf{CP}^n \times \mathbf{CP}^m$ and let $\pi_{\mathbf{C}} : X_{\mathbf{C}} \to V$ be the map induced by the projection to $\mathbf{CP}^m$ and $V = \pi_{\mathbf{C}}(X_{\mathbf{C}})$. By algebraic Sard's theorem (3.7 of [Mu]) $\pi_{\mathbf{C}}$ is a fibre bundle map over the complement of a complex algebraic subset W of V. The real part of W has real codimension $\geqq 1$ in $\overline{\pi(X)}$. Therefore if $\dim(\overline{\pi(X)} - \pi(X)) \geqq \dim \pi(X)$ then we can find a point $x_0 \in (\overline{\pi(X)} - \pi(X)) \cap (V - W)$. Also by hypothesis we can find a point $x_1 \in \pi(X) \cap (V - W)$ with $\chi(\pi^{-1}(x_1))$ odd. The sets $\pi_{\mathbf{C}}^{-1}(x_0)$ and $\pi_{\mathbf{C}}^{-1}(x_1)$ are invariant by complex conjugation, and the fixed point sets of the involutions induced by the complex conjugation are the empty set and $\pi^{-1}(x_1)$, respectively. Hence $\chi(\pi_{\mathbf{C}}^{-1}(x_0)) = 0 \pmod 2$ and

$$\chi(\pi_{\mathbf{C}}^{-1}(x_1)) = \chi(\pi^{-1}(x_1)) = 1 \pmod 2\,;$$

this is a contradiction since $\pi_{\mathbf{C}}^{-1}(x_0) \approx \pi_{\mathbf{C}}^{-1}(x_1)$ (because π is a fibre bundle map over $V - W$). □

§1. Resolution of Algebraic Sets

Another important property of algebraic sets is the resolution property. This property forces algebraic sets to satisfy many topological conditions (see §5). Given an algebraic set V and an algebraic subset L; the *algebraic blowup of* V *along* L $B(V, L)$ defined to be the Zariski closure of

$$\{(x, \theta\, f(x)) \in V \times \mathbf{RP}^{n-1} \mid x \in V - L\}\,,$$

where $f : (V, L) \to (\mathbf{R}^n, 0)$ is a polynomial whose coordinates generate $I(L)/I(V)$ and $\theta : \mathbf{R}^n - \{0\} \to \mathbf{RP}^{n-1}$ is the quotient map $\theta(x_1, \ldots, x_n) = [x_1 : \ldots : x_n]$. The amusing fact is that $B(V, L)$ is well defined algebraic subset of $V \times \mathbf{RP}^{n-1}$. Furthermore if V and L are nonsingular then $B(V, L)$ is diffeomorphic to the topological blowup of V along L $B_t(V, L) = (V - \text{interior } N) \cup E(N)$ where N is the normal disc bundle of L in V and $E(N)$ is the I-bundle over the projectivized normal bundle of L in V, i.e. $E(N)$ is obtained by replacing each fiber D^k of N by $\mathbf{RP}^k - \operatorname{int}(D^k)$. There are natural projections π, π_t making the following commute

$$\begin{tikzcd} B(V, L) \arrow[dr, "\pi"] & \\ \wr\wr & V \\ B_t(V, L) \arrow[ur, "\pi_t"'] & \end{tikzcd}$$

Given any polyhedron M with $L \subset M \subset V$ where L, V smooth manifolds then we define $B_t(M, L)$ to be the closure of $\pi_t^{-1}(M) - \pi_t^{-1}(L)$ in $B_t(V, L)$.

If M is a smooth manifold this definition coincides with the usual $B_t(M, L)$. From now on we drop the subscript and let $B(M, L) \xrightarrow{\pi} M$ to denote the topological (algebraic) blowup if $L \subset M$ are manifolds (algebraic sets). Any inclusions $L \subset M \subset V$ give rise to inclusions $B(M, L) \subset B(V, L)$. Given smooth manifolds $L \subset M \subset V$ and $B(V, L) \xrightarrow{\pi} V$ then $\pi^{-1}(L)$ is the projectivized normal bundle $P(L, V)$ of L in V and $\pi^{-1}(L) \cap B(M, L) = P(L, M)$.

Let V be a nonsingular algebraic set (a smooth manifold) and M be an algebraic subset (a smooth stratified subset). Then $\tilde{V} \xrightarrow{\pi} V$ is called an *algebraic (topological) multiblowup* of V along M if: $\pi = \pi_1 \circ \pi_2 \circ \ldots \circ \pi_k$ for some k, where $\tilde{V} = V_k \xrightarrow{\pi_k} V_{k-1} \xrightarrow{\pi_{k-1}} \ldots \xrightarrow{\pi_1} V_0 = V$ such that $V_{i+1} = B(V_i, L_i) \xrightarrow{\pi_i} V_i$ are blowups along nonsingular algebraic subsets (closed smooth submanifolds) L_i of V_i. Furthermore $L_i \subset M_i$ with $\dim(L_i) < \dim(M_i)$ where $M_{i+i} = B(M_i, L_i)$, $M_0 = M$, and M_k is a nonsingular algebraic subset (a smooth submanifold) of V_k. We will denote M_k by $\tilde{M}$. $\tilde{M}$ is usually called the *strict preimage* of M and L_i's are called the *centers* of the multiblowup. If furthermore the imbeddings $L_i \subset V_i$ and $\tilde{M} \subset \tilde{V}$ satisfy some particular property $\mathscr{P}$ we call $\tilde{V} \xrightarrow{\pi} V$ a *$\mathscr{P}$ algebraic (topological) multiblowup.*

Notice that if $V \subset \mathbf{R}^n$ is an algebraic set then we can assume that

$$\tilde{V} \subset \mathbf{R}^n \times \prod_{i=1}^{k} \mathbf{RP}^{a_i} \subset \mathbf{R}^n \times \mathbf{R}^m$$

for some m and $\pi: \tilde{V} \to V$ is induced by the projection $\mathbf{R}^n \times \mathbf{R}^m \to \mathbf{R}^m$.

THEOREM 1.1 (Hironaka [H]). *Let V be a nonsingular algebraic set and M be an algebraic subset. Then there exists an algebraic multiblowup $\tilde{V} \xrightarrow{\pi} V$ along M. Furthermore $\pi|_{\pi^{-1}(\text{Non sing } M)}$ is a birational diffeomorphism.*

This theorem says that a singular algebraic set can be made nice (nonsingular) by blowing up along nice (nonsingular) algebraic subsets. We can go one step further, namely starting with a nonsingular algebraic set we can make it nicer (fine) by blowing up along nicer (fine) algebraic subsets. First we need some definitions: Let $M \subset V$ be nonsingular algebraic sets, then M is called a *fine algebraic subset* if it is a component of a transversally intersecting codimension one compact nonsingular algebraic subset of V. M is called a *stable algebraic subset* if $M = Z_0 \subset Z_1 \subset \ldots \subset Z_{r+1} = V$ where $\{Z_i\}_{i=0}^{r}$ are compact nonsingular algebraic subsets with $\dim(Z_{i+1}) = \dim(Z_i) + 1$. Similarly in these definitions by changing nonsingular algebraic sets with smooth manifolds we define *fine submanifolds* and *stable submanifolds.*

Clearly fine algebraic subsets (submanifolds) are stable algebraic subsets (submanifolds). Stable algebraic subsets are useful because they obey transversality (Theorem 2.7). In algebraic geometry sometimes fine algebraic subsets are called complete intersections. If M is compact and has a trivial normal bundle in V then M is a fine submanifold of V.

THEOREM 1.2 ([AK$_8$]). *Let V be a nonsingular algebraic set and M be a compact nonsingular algebraic subset. Then there exists a fine algebraic multiblowup $\tilde{V} \xrightarrow{\pi} V$ along M.*

Since any pair of closed smooth manifolds $M \subset V$ are pairwise diffeomorphic to nonsingular algebraic sets (Theorem 2.12), Theorem 1.2 has the obvious topological version. An application of this theorem is Proposition 2.11 (the definition of $\sigma(\theta)$).

There is a homology version of the resolution theorem, which says that $\mathbf{Z}/2Z$-cocycles (or cycles) can be desingularized by blowing up. For a given compact nonsingular algebraic set V let $H_*^A(V; \mathbf{Z}/2\mathbf{Z})$, $AH_*(V; \mathbf{Z}/2\mathbf{Z})$, $H_*^{imb}(V; \mathbf{Z}/2\mathbf{Z})$ denote the subgroups of $H_*(V; \mathbf{Z}/2\mathbf{Z})$ generated by algebraic subsets, stable algebraic subsets, imbedded closed smooth submanifolds respectively. Let $H_A^*(V; \mathbf{Z}/2\mathbf{Z})$, $AH^*(V; \mathbf{Z})$, $H_{imb}^*(V; \mathbf{Z}/2\mathbf{Z})$ denote the Poincaré duals of these subgroups.

THEOREM 1.3 ([AK$_8$]). *Let V be a compact nonsingular algebraic set, then there exists an algebraic multiblowup $\tilde{V} \xrightarrow{\pi} V$ such that, for all i*

(a) $\pi^* H^i(V; \mathbf{Z}/2\mathbf{Z}) \subset H_{imb}^i(\tilde{V}; \mathbf{Z}/2\mathbf{Z})$

(b) $\pi^* H_A^i(V; \mathbf{Z}/2\mathbf{Z}) \subset AH^i(\tilde{V}; \mathbf{Z}/2\mathbf{Z})$

Furthermore if we fix i we can assume that the centers of the multiblowup has dimension $< \dim(V) - i$.

As a corollary to the proof of Theorem 1.3 one gets an algebraic version of Steenrod representability theorem:

COROLLARY 1.4. *If V is a nonsingular algebraic set and*

$$\theta \in H_k(V; \mathbf{Z}/2\mathbf{Z}),$$

then there exists an algebraic multiblowup $\tilde{V} \xrightarrow{\pi} V$ along the centers of dimension less than k and a k-dimensional nonsingular algebraic subset Z of $\tilde{V}$ and a component Z_0 of Z, such that $\pi|_{Z_0}: Z_0 \to V$ represents θ.

(b) Implies that the algebraic cohomology $H^*_A(V; \mathbf{Z}/2\mathbf{Z})$ is closed under cohomology operations [AK_8]. For example to show that the intersection of two algebraic homology classes is an algebraic homology class we take a resolution $\tilde{V} \xrightarrow{\pi} V$ which makes these algebraic subsets stable algebraic subsets, then by Theorem 2.7 we can make them transversal and project the intersection back into V, then the Zariski closure of this set corresponds to the homology intersection of the original homology classes.

Since any closed smooth manifold is diffeomorphic to a nonsingular algebraic set (a) applies to smooth manifolds. It gives some interesting topological corollaries. Here is an example: Let $MO(r)$ be the Thom space [T] of the universal $\mathbf{R}^r$-bundle. The Thom class generates

$$H^r(MO(r) : \mathbf{Z}/2\mathbf{Z}) \cong H^{r+n}(\Sigma^n MO(r) ; \mathbf{Z}/2\mathbf{Z})$$

hence it defines a map $\Sigma^n MO(r) \to K(\mathbf{Z}/2\mathbf{Z}, r+n)$. By taking n-fold loops on both sides we get a natural map

$$p : \Omega^n \Sigma^n MO(r) \to K(\mathbf{Z}/2\mathbf{Z}, r) .$$

It is well known that any r-dimensional cohomology class of a closed smooth manifold M is classified by a map $f : M \to K(\mathbf{Z}/2\mathbf{Z}, r)$ and the dual of this cohomology class can be represented by an immersed submanifold if and only if f lifts to $\Omega^n \Sigma^n MO(r)$ for some large n. So it is useful to understand the map p. Interestingly, Theorem 1.3 implies that p is an injection in $\mathbf{Z}/2\mathbf{Z}$ cohomology as follows: By taking the boundary of a tubular neighborhood V of some big skeleton of $K(\mathbf{Z}/2\mathbf{Z}, r)$ in $\mathbf{R}^n$ we get an inclusion $f : V \to K(\mathbf{Z}/2\mathbf{Z}, r)$ with f^* isomorphism for large $*$. By Theorem 1.3 we can take a multiblowup $\tilde{V} \xrightarrow{\pi} V$ with $\pi^* f^*(\iota) \in H^*_{imb}(\tilde{V} : \mathbf{Z}/2\mathbf{Z})$, where ι is the fundamental class. Hence the dual of $\pi^* f^*(\iota)$ is represented by an immersed submanifold, therefore there is a map g making the following commute

$$\begin{array}{ccc} \tilde{V} & \xrightarrow{g} & \Omega^n \Sigma^n MO(r) \\ {\scriptstyle \pi}\downarrow & & \downarrow{\scriptstyle p} \\ V & \xrightarrow{f} & K(\mathbf{Z}/2\mathbf{Z}, r) \end{array}$$

Since π is a degree 1 map it is an injection in cohomology, hence p^* must be an injection.

§2. Nonsingular Algebraic Sets

The fact that closed smooth manifolds are diffeomorphic to nonsingular algebraic sets can be traced back to the following simple fact.

Proposition 2.1. *Let L be a nonsingular algebraic set and K be a compact set with $L \subset K \subset \mathbf{R}^n$, let $f : \mathbf{R}^n \to \mathbf{R}$ be a smooth function with $f|_L = u$ for some entire rational function u. Then there is an entire rational function $p: \mathbf{R}^n \to \mathbf{R}$ which approximates f arbitrarily closely near K with $p|_L = u$ (if u is a polynomial then p can be taken to be a polynomial). Furthermore if $f - u$ has compact support then p can approximate f on all of $\mathbf{R}^n$.*

Proof: First write $f - u = \sum_i a_i \cdot \beta_i$ where a_i are smooth functions and $\beta_i \in I(L)$. Clearly we can do this locally, and then by putting these local expressions together by partitions of unity we get the global expression. We approximate $a_i(x)$ by polynomials $\alpha_i(x)$ near K and let $p = u + \sum_i \alpha_i \cdot \beta_i$. $p(x)$ has the required properties. If $p - u$ has compact support we can define a smooth function $g: S^n \to \mathbf{R}$ by $g = (f - u) \circ \theta$ on $S^n - (0, 1)$ and $g(0, 1) = 0$, where $S^n \subset \mathbf{R}^n \times \mathbf{R}$ is the unit sphere and $\theta: S^n - (0, 1) \to \mathbf{R}^n$ is the stereographic projection, $\theta(x, t) = \dfrac{x}{1 - t}$. Then

$$g : (S^n, \theta^{-1}(L) \cup (0, 1)) \to (\mathbf{R}, 0)$$

hence by the first part of the theorem g can be approximated by an entire rational function

$$\hat{p}: (S^n, \theta^{-1}(L) \cup (0, 1)) \to (\mathbf{R}, 0) .$$

Let $p = \hat{p} \circ \theta^{-1} + u$. □

The following was introduced in [AK_2] to simplify Nash's and Tognoli's theorems.

Proposition 2.2 (Normalization). *Given $L \subset K \subset \mathbf{R}^n$, $W \subset \mathbf{R}^m$ where L, W are nonsingular algebraic sets and K is a compact set, and $f : K \to W$ a smooth function with $f|_L = u$ for some entire rational function $u : L \to W$. Then there is an algebraic set $Z \subset \mathbf{R}^n \times \mathbf{R}^m$ and an entire rational function*

$p : Z \to W$ and an open neighborhood U of K in $\mathbf{R}^n$ and a smooth function $\varphi : (U, L) \to (\mathbf{R}^m, 0)$ such that

(i) *The set $\tilde{U} = \{(x, \varphi(x)) \mid x \in U\} \subset \mathbf{R}^n \times \mathbf{R}^m$ is an open nonsingular subset of Z.*

(ii) *p is arbitrarily close to $f \circ \pi$ on $\tilde{U}$ where π is the projection to the first factor.*

(iii) *$L \times 0 \subset \tilde{U}$ and $p|_{L \times 0} = u$.*

Proof: Let $\delta : \mathbf{R}^m \to \mathbf{R}^{m^2}$ be an entire rational function with

$$\delta(x) \in G(m, m - \dim W)$$

is the normal plane to W at $x \in W$ (from §0). By Proposition 2.1 there is an entire rational function $g : \mathbf{R}^n \to \mathbf{R}^m$ which approximates f on K with $g|_L = u$. Define:

$$Z = \{(x, y) \in \mathbf{R}^n \times \mathbf{R}^m \mid g(x) + y \in W, \delta(g(x) + y)y = y\}$$
$$p : Z \to \mathbf{R}^m, p(x, y) = g(x) + y$$

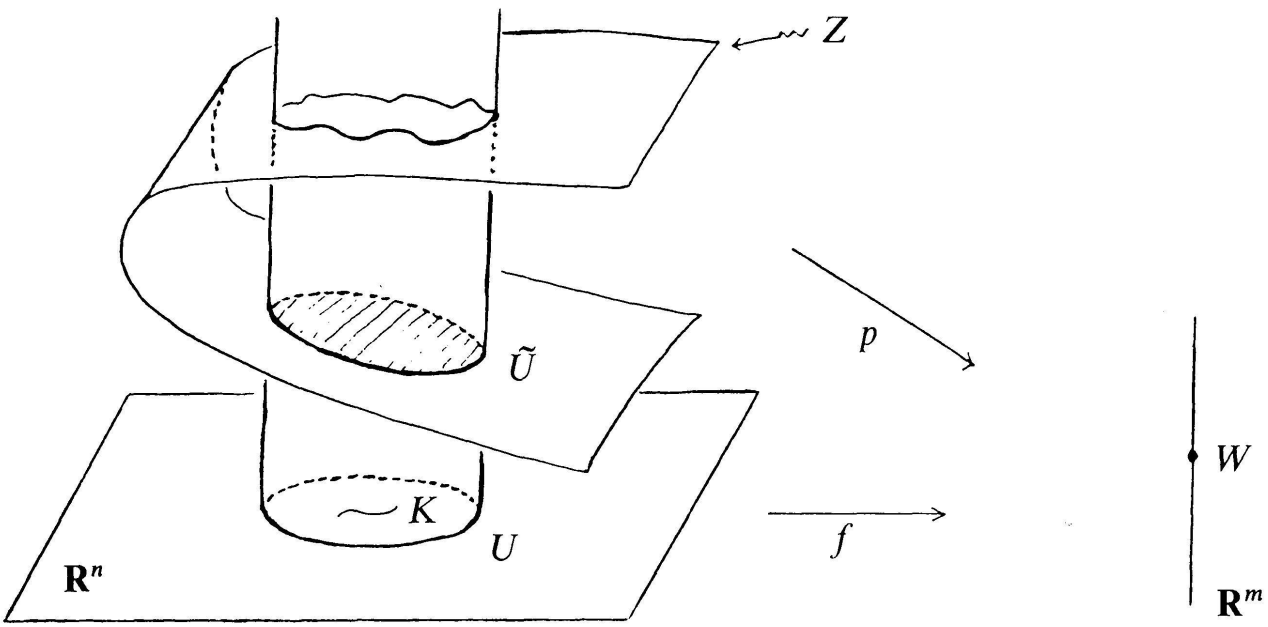

Clearly Z is an algebraic set. Let U be a small open tubular neighborhood of K such that g is arbitrarily close to f on U. Therefore when $x \in U$ there is a unique closest point $v(x)$ on W to $g(x)$. Define $\varphi(x) = v(x) - g(x)$ to be the vector from $g(x)$ to $v(x)$. Hence $\varphi(x)$ is perpendicular to W at $v(x) = g(x) + \varphi(x)$, so $\varphi(x)$ is the unique "small" solution of the equations

$$\begin{Bmatrix} g(x) + y \in W \\ \delta(g(x) + y)y = y \end{Bmatrix} \quad \text{which is} \quad \begin{Bmatrix} g(x) + y \in W \\ y \text{ is } \perp \text{ to } W \text{ at } g(x) + y \end{Bmatrix}$$

Hence $\tilde{U} = \{(x, \varphi(x)) \mid x \in U\}$ has the property

$$\tilde{U} = Z \cap U \times \{y \in \mathbf{R}^m \mid |y| < \varepsilon\}$$

for some small $\varepsilon > 0$. Clearly Z, U, p has the required properties. □

THEOREM 2.3 (Generalized Seifert Theorem). *Let $M^m \subset V^v$ be a closed smooth submanifold of a nonsingular algebraic set V, imbedded with a trivial normal bundle, and let $L \subset M$ be a nonsingular algebraic set. Then by an arbitrarily small isotopy M is isotopic to a component of a nonsingular algebraic subset of V fixing L.*

Proof: Let $V \subset \mathbf{R}^n$ and let W, U be small open neighborhoods of M^m in V^v, and in $\mathbf{R}^n$ respectively. Let $f : W \to \mathbf{R}^{v-m}$ be the trivialization map of the normal bundle of M in V, f is transverse to $0 \in \mathbf{R}^{v-m}$ and $f^{-1}(0) = M$. Then extend f to $f : U \to \mathbf{R}^{v-m}$. Since $f|_L = 0$ by Proposition 2.1 we can approximate f on Closure(U) by a polynomial $F : (\mathbf{R}^n, L) \to (\mathbf{R}^{v-m}, 0)$. By transversality $F^{-1}(0) \cap W$ is isotopic to $f^{-1}(0) \cap W = M$. In general $F^{-1}(0)$ might have extra components outside of U. □

It is interesting to note that in general the extra components of $F^{-1}(0)$ can not be removed, there are homotopy theoretical obstructions [AK_8] (even when $L = \emptyset$).

Remark 2.4. In Theorem 2.3 it is not necessary to assume that L is nonsingular, it suffices to assume that some open neighborhood W of L in M coincides with an open subset of a nonsingular algebraic set. The proof is the same except it requires a slight modification in Proposition 2.1 (see [AK_2]).

THEOREM 2.5 (Generalized Nash theorem). *Let $M^m \subset \mathbf{R}^n$ be a closed smooth submanifold, and $L \subset M$ be a nonsingular algebraic set. Assume that some open neighborhood W of L in M is an open subset of some nonsingular algebraic set. Then by an arbitrarily small isotopy M can be isotoped to a nonsingular component of an algebraic subset of $\mathbf{R}^n \times \mathbf{R}^s$ keeping L fixed (for some s).*

Proof: Let U be an open tubular neighborhood of M in $\mathbf{R}^n$ and $f : U \to E(n, k)$ be the map which classifies the normal bundle of M in U. $f \pitchfork G(n, k)$ and $f^{-1}(G(n, k)) = M$. By using W we can assume $f|_L = u$ for some entire rational function u (see §0). By Proposition 2.2 there is a nonsingular open subset $\tilde{U}$ of an algebraic set $Z \subset \mathbf{R}^n \times \mathbf{R}^s$ for some s, and an entire rational function $p : \tilde{U} \to E(n, k)$ which makes the following commute

$$\begin{tikzcd}
\mathbf{R}^n \times \mathbf{R}^s \supset \tilde{U} \arrow[d, "\pi"] \arrow[dr, "p"] & \\
\mathbf{R}^n \supset U \arrow[r, "f"] & E(n,k) \supset G(n,k)
\end{tikzcd}$$

where π is projection, and $f \circ \pi$ is close to p, and $L \times 0 \subset \tilde{U}$ with $p|_{L \times 0} = u$.

$$\tilde{U} = \{(x, \varphi(x)) \mid x \in U\}$$

for some smooth function $\varphi(x)$. Let $\hat{p}(x) = p(x, \varphi(x))$ then $\hat{p}$ is close to f on U. By transversality $\hat{p}^{-1}(G(n,k)) \cap U$ is isotopic to $f^{-1}(G(n,k)) \cap U = M$ in U. Since π is an isomorphism on $\tilde{U}$ and $p = \hat{p} \circ \pi$,

$$p^{-1}(G(n,k)) \cap \tilde{U} = \pi^{-1}(\hat{p}^{-1}(G(n,k)) \cap U) \approx M .$$

$p^{-1}(G(n,k)) \cap \tilde{U}$ is a component of an algebraic set by construction and nonsingular by transversality, furthermore it contains $L \times 0$. $\square$

Let V be a nonsingular real algebraic set of dimension n. Recall $AH_{n-1}(V; \mathbf{Z}/2\mathbf{Z})$ is the subgroup of $H_{n-1}(V; \mathbf{Z}/2\mathbf{Z})$ generated by nonsingular algebraic subsets. We define

$$H^t_{n-1}(V) = H_{n-1}(V; \mathbf{Z}/2\mathbf{Z})/AH_{n-1}(V; \mathbf{Z}/2\mathbf{Z}) ,$$

which we call the group of *codimension one transcendental cycles.* For any codimension and closed smooth submanifold $M \subset V$ let $\alpha(M)$ be the image of the fundamental homology class $[M]$ under the quotient map.

THEOREM 2.6 ([AK_8]). *Any codimension one closed smooth submanifold $M \subset V$ of a nonsingular algebraic set V is isotopic to a nonsingular algebraic subset by an arbitrarily small isotopy if and only if $\alpha(M) = 0$.*

Sketch of proof: For simplicity assume that M has a trivial normal bundle and $[M]$ is represented by a single nonsingular algebraic subset W of V. If $M \cap W = \emptyset$ then $M \cup W$ separates V into two components V_+, V_- with one of them, say V_+, is compact (since M is homologous to W). Let $f : (V, M \cup W) \to (\mathbf{R}, 0)$ be a smooth function with $f > 0$ on V_+ and $f < 0$ on V_-. We can assume that f is transversal to 0 and is constant outside of a compact set containing V_+. By Proposition 2.1 we can approximate f by a polynomial $F : (V, W) \to (\mathbf{R}, 0)$, then by transversality $F^{-1}(0) = M' \cup W$ where M' is isotopic to M. $M' \cup W$ is a nonsingular algebraic set hence M' is a nonsingular algebraic set.

If $M \cap W \neq \emptyset$ then we can find a smooth representative N of $[M]$ with $N \cap M = \emptyset$ and $N \cap W = \emptyset$. By the first part we can isotope N to a nonsingular algebraic set N' by a small isotopy. Hence $N' \cap M = \emptyset$; and since N' is homologous to M by the previous case M is isotopic to a nonsingular algebraic set by a small isotopy.

The proof of the case M does not have a trivial normal bundle is more difficult, we refer the reader to [AK_8]. □

Proposition 2.10 implies that $H^t_{n-1}(V)$ is nontrivial in general. One of the corollaries of Theorem 2.6 is that codimension one nonsingular algebraic sets can be moved around by isotopies. A natural generalization of this fact is:

THEOREM 2.7 (Algebraic transversality [AK_8]). *Let V be a nonsingular algebraic set and $M \subset V$ be a stable algebraic subset. Let N be a smooth subcomplex of V. Then there exists an arbitrarily small isotopy $f_t : M \to V$ with $f_0(M) = M$ and $f_1(M)$ is a stable algebraic subset transverse to N.*

Let $\eta_*(V)$ be the unoriented bordism group of a nonsingular algebraic set V. Let $\eta^A_*(V)$ be the subgroup of $\eta_*(V)$ generated by entire rational maps $f : M \to V$ where M is a compact nonsingular algebraic set. By taking graph of f one easily sees that every element of $\eta^A_*(V)$ has a representative (M, f), where $M \subset V \times \mathbf{R}^n$ is a nonsingular algebraic set for some n, and f is induced by projection.

THEOREM 2.8. *Let $f : M \to V$ be a map from a closed smooth manifold to a nonsingular algebraic set V. Then $(M, f) \in \eta^A_*(V)$ if and only if $f \times 0$ can be approximated by an imbedding onto a nonsingular algebraic subset of $V \times \mathbf{R}^n$ for some n.*

Proof: One way the proof is trivial. Assume $(M, f) \in \eta^A_*(V)$, then there is a smooth manifold Z and a map $F : Z \to V$ with $\partial Z = M \cup N$ and N is a nonsingular algebraic set, $F|_M = f$ and $F|_N$ is an entire rational function. Let $\hat{Z}$ be the double of Z i.e. $\hat{Z} = \partial(Z \times [-1, 1])$. By taking graph of F we may assume $Z \subset V \times \mathbf{R}^s$ is imbedded for some s. In particular $N \subset Z$ is a nonsingular algebraic subset of $V \times \mathbf{R}^s$. Then extend this imbedding to an imbedding $\hat{Z} \subset V \times \mathbf{R}^s \times \mathbf{R}$ which is identity on $N \times (-1, 1)$. Then by Theorem 2.5 we can isotope $\hat{Z}$ to a nonsingular component of an algebraic set $Y \subset V \times \mathbf{R}^n$ for some n with $N \subset Y$. Since the codimension one submanifolds N and M of $\hat{Z}$ are homologous, M can be isotoped to a nonsingular algebraic subset of Y, by Theorem 2.6. □

COROLLARY 2.9 (Tognoli [To]). *Every closed smooth manifold is diffeomorphic to a nonsingular algebraic set.*

The hypothesis of Theorem 2.8 is not void in fact we have:

PROPOSITION 2.10 ([AK_8]). *For any k there exist a nonsingular connected algebraic set V and a closed smooth codimension k submanifold $M \subset V$ which can not be isotopic to a nonsingular algebraic subset in $V \times \mathbf{R}^n$ for any n.*

Proof: Let $W = \mathbf{R}^m$ with $m - k$ even, and X be an algebraic subset given by $x_2^4 + (x_1^2 - 1) . (x_1^2 - 4) = 0$ and $x_3 = x_4 = \quad = x_m = 0$. X is a nonsingular irreducible algebraic set of two components $X_0 \cup X_1$ each of which is homeomorphic to a circle. Let N be any smooth submanifold of W with $N \cap X = X_0$, and $\dim(N) = m - k$. Then let $M = B(N, X_0)$, $V = B(W, X) \xrightarrow{\pi} W$ be topological and algebraic blowups, respectively. Assume that $M \times 0$ was isotopic to an algebraic subset Y of $V \times \mathbf{R}^n$ by a small isotopy. Then we get a compact nonsingular algebraic set $Z = Y \cap (\pi \circ p)^{-1}(X)$ and an entire rational function $f = \pi \circ p$ where $p: V \times \mathbf{R}^n \to V$ is the projection. Furthermore $f: Z \to \mathbf{R}^m$ has the properties: $f(Z) = X_0$ and $f^{-1}(x) \approx \mathbf{RP}^{m-k-2}$ for $x \in X_0$ by transversality. Hence since $\bar{X}_0 = X$ and $\chi(\mathbf{RP}^{m-k-2})$ is odd we get a contradiction to Lemma 0.2. □

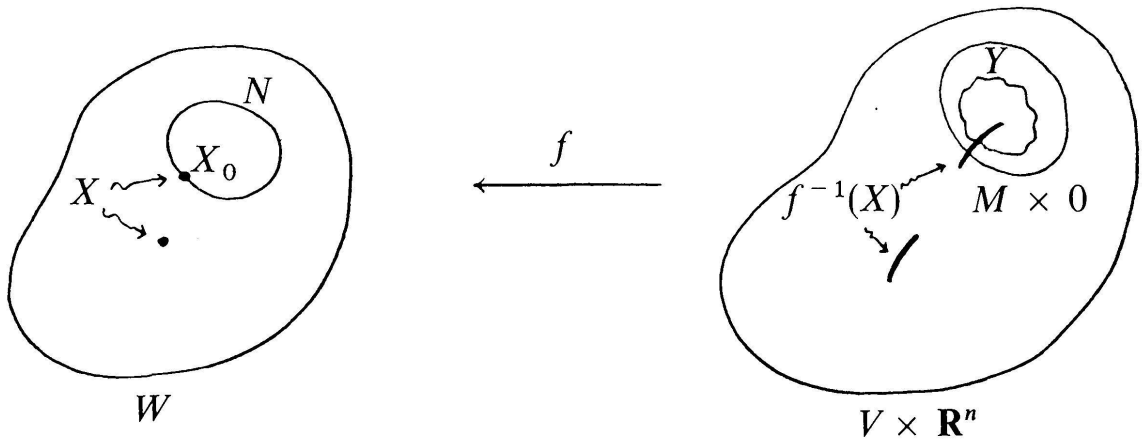

Recall $\eta_*(V) \approx H_*(V; \mathbf{Z}/2\mathbf{Z}) \otimes \eta_*(\text{point})$ and $\eta_*(V)$ is generated by $Q \times N \xrightarrow{\pi} Q \xrightarrow{g} V$ where π is the projection and N is a generator of $\eta_*(\text{point})$ and $g_*[Q]$ is a generator of $H_*(V; \mathbf{Z}/2\mathbf{Z})$. Given $(M, f) \in \eta_*(V)$ with $(M, f) = \Sigma\, \theta \otimes U_i$ then it follows that $(M, f) \in \eta_*^A(V)$ if each $\theta_i \in H_*^A(V; \mathbf{Z}/2\mathbf{Z})$ ([AK_2]). If an algebraic set V has the property $H_*(V; \mathbf{Z}/2\mathbf{Z}) = H_*^A(V, \mathbf{Z}/2\mathbf{Z})$ for all * we say that V has *totally algebraic homology;* therefore such algebraic sets have the

property $\eta_*(V) = \eta_*^A(V)$. $\mathbf{RP}^m$ and more generally $G(n, m)$ are examples of algebraic sets with totally algebraic homology, because their homology is generated by Schubert cycles. This property is invariant under cross products. Also if $L \subset V$ are nonsingular algebraic sets with totally algebraic homology, then so is $B(V, L)$ (Proposition 6.1 of [AK_6]). It is still an open question that whether any closed smooth manifold is diffeomorphic to a nonsingular algebraic set with totally algebraic homology.

Therefore it would be useful to understand when a given homology class $\theta \in H_*(V; \mathbf{Z}/2\mathbf{Z})$ of a nonsingular algebraic set V lies in $H_*^A(V; \mathbf{Z}/2\mathbf{Z})$. This can be detected by a single obstruction $\sigma(\theta)$ as follows. Let $M \subset V$ be a fine submanifold of a nonsingular algebraic set, in particular

$$M = V_0 \subset V_1 \subset \ldots \subset V_r \subset V_{r+1} = V$$

for some closed smooth manifolds $\{V_i\}$ with $\dim(V_{i+1}) = \dim(V_i) + 1$, then let

$$\tilde{\alpha}(M) = \operatorname{Inf}\{k \mid \alpha(V_i) = 0 \quad \text{for} \quad i \geqq k\}$$

(make the convention $\alpha(V_{r+1}) = 0$). Recall the definition of $\alpha(V_r) \in H_{n-1}^t(V)$, where $n = \dim(V)$. Theorem 2.6 says that if $\alpha(V_r) = 0$ then V_r can be made a nonsingular algebraic subset of V and therefore $\alpha(V_{r-1}) \in H_{n-2}^t(V_r)$ is defined... etc. Hence by continuing this fashion we see that if $\tilde{\alpha}(M) = 0$ then M is isotopic to an algebraic subset of V.

If $M \subset V$ is just a smooth submanifold of V, then let $\mathscr{F}(V, M)$ be the set of all fine topological multiblowups $\tilde{V} \xrightarrow{\pi} V$ along M ($\mathscr{F}(V, M)) \neq \emptyset$ by Theorem 1.2 and the remarks proceeding it):

$$\tilde{V} = V_k \xrightarrow{\pi_k} V_{k-1} \xrightarrow{\pi_{k-1}} \ldots \xrightarrow{\pi_1} V_0 = V,$$

where $V_i = B(V_{i-1}, L_{i-1})$, and $L_i \subset V_i$, $\tilde{M} \subset V_k$ are all fine submanifolds. Make the convention $\tilde{M} = L_k$ then for $(\tilde{V}, \pi) \in \mathscr{F}(V, M)$ define

$$\sigma(\tilde{V}, \pi) = \operatorname{Inf}\{k - n \mid \tilde{\alpha}(L_i) = 0 \quad \text{for} \quad i \leqslant n\}$$

Then $\sigma(\tilde{V}, \pi) = 0$ implies that all $\tilde{\alpha}(L_i) = 0$, hence inductively we can assume that $L_i \subset V_i$ are nonsingular algebraic subsets and therefore we can make $\tilde{V} \xrightarrow{\pi} V$ an algebraic multiblowup and $\tilde{M} \subset \tilde{V}$ an algebraic subset. In fact $\sigma(\tilde{V}, \pi) = 0$ if and only if $\tilde{V} \xrightarrow{\pi} V$ is a stable algebraic multiblowup along M. Let

$$\sigma(M) = \operatorname{Inf}\{\sigma(\tilde{V}, \pi) \mid (\tilde{V}, \pi) \in \mathscr{F}(V, M)\}$$

and if $\theta \in H_k(V; \mathbf{Z}/2\mathbf{Z})$ define

$$\sigma(\theta) = \operatorname{Inf}\left\{\sigma(M) \,\middle|\, \begin{array}{l} M \hookrightarrow V \times \mathbf{R}^s \text{ is an imbedding for some } s, \\ p_*[M] = \theta \text{ where } p \text{ is the projection} \end{array}\right\}$$

Then we have:

PROPOSITION 2.11 ([AK$_8$]). *If* $\theta \in H_k(V, \mathbf{Z}/2\mathbf{Z})$ *then* $\theta \in H_*^A(V; \mathbf{Z}/2\mathbf{Z})$ *if and only if* $\sigma(\theta) = 0$.

In particular this obstruction $\sigma(\theta)$ is a function of the codimension one obstruction of Theorem 2.6. It measures whether certain codimension one homology classes are transcendental. There is also a relative version of Nash's theorem:

THEOREM 2.12 ([AK$_3$]). *Let* M *be a closed smooth manifold and* $M_i \subset M$ $i = 0, ..., k$ *be closed smooth submanifolds in general position. Then there exists a nonsingular algebraic set* V *and a diffeomorphism.* $\lambda : M \to V$ *such that* $\lambda(M_i)$ *is a nonsingular algebraic subset of* V *for all* i.

A proof of special case: Here we give a proof of the case when each M_i is a codimension one submanifold. Since $\mathbf{RP}^n$ approximates $K(\mathbf{Z}/2\mathbf{Z}, 1)$ for n large, we can find imbeddings $\gamma_i : M \hookrightarrow \mathbf{RP}^n$ with $\gamma_i^{-1}(\mathbf{RP}^{n-1}) = M_i$. Consider the product imbedding $\gamma : M \hookrightarrow \prod_{i=1}^{k} \mathbf{RP}_i^n$, where $\mathbf{RP}_i^n = \mathbf{RP}^n$, $\gamma = (\gamma_1, ..., \gamma_k)$. Then by Theorem 2.8, after a small isotopy we can assume that $\gamma(M)$ is a nonsingular algebraic subset V of $\prod_{i=1}^{k} \mathbf{RP}_i^n \times \mathbf{R}^m$ for some m (since $\prod_{i=1}^{k} \mathbf{RP}_i^n$ has totally algebraic homology). Let $\pi_i : \prod_{i=1}^{k} \mathbf{RP}_i^n \times \mathbf{R}^m \to \mathbf{RP}^n$ be the projection to the i-th factor, and call $V_i = \pi_i^{-1}(\mathbf{RP}^{n-1}) \cap V$ then $V_i \approx M_i$ by transversality. In fact γ induces a diffeomorphism

$$(M; M_1, ..., M_k) \approx (V; V_1, ..., V_k). \qquad \square$$

In [BT$_2$] another proof of this theorem is given. Theorem 2.12 can be used to produce distinct algebraic structures on smooth manifolds. If V is a smooth manifold we can define a usual structure set

$$\mathscr{S}_{\mathrm{Alg}}(V) = \left\{(V', g) \,\middle|\, \begin{array}{l} V' \text{ is a nonsingular algebraic set} \\ g : V' \to V \text{ is a diffeomorphism} \end{array}\right\} \Big/ \sim$$

$\sim$ is the equivalence relation $(V', g) \sim (V'', h)$ if there is a birational diffeomorphism γ making the following commute

$$\begin{tikzcd} V' \arrow[dr, "g"] \arrow[d, "\gamma"'] & \\ V'' \arrow[r, "h"'] & V \end{tikzcd}$$

$\mathscr{S}_{\mathrm{Alg}}(V)$ is the set of distinct algebraic structures on V. Hence a natural problem is to compute $\mathscr{S}_{\mathrm{Alg}}(V)$, or at least produce nontrivial elements of this set. For example if we take $M \subset V$ as in Proposition 2.10, then by Theorem 2.12 (V, M) is diffeomorphic to nonsingular algebraic sets (V', M'). Let $|V| = |V'|$ denote the underlying smooth structures and let $V \xrightarrow{g} |V|$, $V' \xrightarrow{g'} |V|$ be the forgetful maps. Then (V, g) and (V', g') are distinct elements of $\mathscr{S}_{\mathrm{Alg}}(|V|)$, otherwise M would be isotopic to a nonsingular algebraic subset of V.

An interesting question is whether algebraic structures on smooth manifolds satisfy the product structure theorem; that is, whether the natural map

$$\mathscr{S}_{\mathrm{Alg}}(M) \times \mathbf{R}^n \to \mathscr{S}_{\mathrm{Alg}}(M \times \mathbf{R}^n),\ (V, g) \mapsto (V \times \mathbf{R}^n, g \times id)$$

is surjection. The answer would be negative if one can find a smooth manifold M and $\theta \in H_*(M; \mathbf{Z}/2\mathbf{Z})$ such that M can not be diffeomorphic to a nonsingular algebraic set M' with $\theta \in H_*^A(M'; \mathbf{Z}/2\mathbf{Z})$. To see this, pick any smooth representative $N \xrightarrow{g} M$ of $\theta = g_*[N]$. By graphing g, we can assume $N \subset M \times \mathbf{R}^n$ for some n and g is induced by projection. By Theorem 2.12 we can find a diffeomorphism $\lambda : M \times \mathbf{R}^n \to V$ to a nonsingular algebraic set V with $\lambda(N)$ is an algebraic subset (one has to modify Theorem 2.12 to apply to this noncompact case). Then there can not exist a birational diffeomorphism $\mu : V \to M' \times \mathbf{R}^n$ where M' is a nonsingular algebraic set diffeomorphic to M, otherwise $\lambda(N) \xrightarrow{\mu} M' \times \mathbf{R}^n \xrightarrow{\text{projection}} M'$ would represent $\theta \in H_*^A(M'; \mathbf{Z}/2\mathbf{Z})$.

§3. Blowing Down

Real algebraic sets obey some simple but useful topological properties:

Proposition 3.1.

(a) *One point compactification an algebraic set is homeomorphic to an algebraic set.*

(b) *Given algebraic sets $L \subset V$, then $V - L$ is homeomorphic to an algebraic set.*

(c) *Given algebraic sets $L \subset V$ with V compact then V/L is homeomorphic to an algebraic set.*

Proof:

(a) Let $Z \subset \mathbf{R}^n$ be an algebraic set and assume that $Z \neq \mathbf{R}^n$ and $0 \notin Z$ (otherwise translate Z). Let $Z = f^{-1}(0)$ for some polynomial $f(x)$; then define $F(x) = |x|^{2d} f\left(\frac{x}{|x|^2}\right)$, where d is the degree of $f(x)$. Clearly $F(x)$ is a polynomial and $F^{-1}(0)$ is the one point compactification of Z, since $x \mapsto \frac{x}{|x|^2}$ is the inversion through the unit sphere.

(b) Let $V = f^{-1}(0)$, $L = g^{-1}(0)$ for some polynomials $f, g : \mathbf{R}^n \to \mathbf{R}$. Define $G(x, t) = |f(x)|^2 + |tg(x) - 1|^2$, then $G^{-1}(0) \approx V - L$.

(c) By applying (a) we get the one point compactification of $G^{-1}(0)$ to be an algebraic set; if V is compact this set is homeomorphic to V/L. □

This proposition implies that a set is homeomorphic to an algebraic set if and only if the one point compactification is homeomorphic to an algebraic set. Hence any noncompact algebraic set has a collar at infinity, since every algebraic set is locally cone-like [M]. Also we get that the reduced suspension $\Sigma^n X = X \times S^n / X \vee S^n$ of any algebraic set X is homeomorphic to an algebraic set.

There is a fancier version of the blowing down operation (c) (Proposition 3.3). First we need to discuss projectively closed algebraic sets. Let $p : \mathbf{R}^n \to \mathbf{R}$ be a polynomial. Another interpretation of this concept is the following: Let $\lambda : \mathbf{R}^n$ d. We call $p(x)$ an *overt polynomial* if $p_d^{-1}(0)$ is either the empty set or $\{0\}$. We call an algebraic set $V = p^{-1}(0)$ a *projectively closed algebraic* set if $p(x)$ is an overt polynomial. Another interpretation of this concept is the following: Let $\lambda : \mathbf{R}^n \to \mathbf{RP}^n$ be the inclusion $\lambda(x_1, ..., x_n) = [1; x_1; ...; x_n]$ then $V = p^{-1}(0)$ is projectively closed if and only if λ is a projective algebraic subset of $\mathbf{RP}^n$ in other words $\lambda(V)$ is Zariski closed in $\mathbf{RP}^n$ (see also [AK_2]). Real algebraic sets along with maps can easily be made projectively closed by the following.

PROPOSITION 3.2. *Let $f : Z \to W$ be an entire rational function between algebraic sets with Z nonsingular and compact. Then there is a projectively closed algebraic set $V \subset W \times \mathbf{R}^n$ a birational diffeomorphism g which makes the following commute*

$$\begin{array}{ccc} V & \hookrightarrow & W \times \mathbf{R}^n \\ {}^{g}\uparrow \approx & & \downarrow^{\pi} \\ Z & \xrightarrow{f} & W \end{array}$$

where π is the projection, n is some integer.

Proof: By taking the graph of f we can assume that $Z \subset W \times \mathbf{R}^m \subset \mathbf{R}^r$ for some r, and f is induced by projection. Also identify $\mathbf{R}^r \subset \mathbf{RP}^r$ via λ. Then let $\bar{Z}$ be the Zariski closure of Z in $\mathbf{RP}^r$. We claim $\dim(\bar{Z}-Z) < \dim(Z)$. This is because if U is an irreducible component of $\bar{Z}$ then $U \cap Z \neq \emptyset$, and therefore $U - Z = U \cap \mathbf{RP}^{r-1}$ is a proper algebraic subset of U where $\mathbf{RP}^{r-1} = \{[0; x_1; \ldots; x_r] \in \mathbf{RP}^r\}$. Since U is irreducible $\dim(U-Z) < \dim(U)$, also $\dim(U) = \dim(Z)$. Therefore $\dim(\bar{Z}-Z) < \dim(Z)$. So $\bar{Z} - Z = \mathrm{Sing}(\bar{Z})$. By resolution of singularities [H] (Theorem 1.1) there is a nonsingular algebraic set $V \subset \mathbf{RP}^r \times \prod_i \mathbf{RP}^{a_i}$ such that the projection induces birational diffeomorphism between V and Z. In particular $V \subset \mathbf{R}^r \times \prod_i \mathbf{RP}^{a_i}$.

$$\mathbf{RP}^r \times \prod_i \mathbf{RP}^{a_i} \hookrightarrow \mathbf{R}^{(r+1)^2 + \Sigma(a_i+1)^2}$$

is a projectively closed algebraic set. Hence V is projectively closed (check details). □

Now assume that $L \subset W \subset \mathbf{R}^m$ be real algebraic sets, and $V \subset W \times \mathbf{R}^n$ be a projectively closed algebraic set. Let $q : \mathbf{R}^m \to \mathbf{R}$ be a polynomial with $q^{-1}(0) = L$. Define

$$D_q : W \times \mathbf{R}^n \to W \times \mathbf{R}^n$$

by $D_q(x, y) = (x, yq(x))$. D_q is a diffeomorphism on $(W-L) \times \mathbf{R}^n$ and $D_q(L \times \mathbf{R}^n) = L \times 0$. Therefore $D_q(V)$ is the quotient space of V by the equivalence relation $(x, y) \sim (x, 0)$ if $x \in L$. We call the operation $V \to D_q(V) \cup L$ (L is identified by $L \times 0$) *blowing down* V *over* L.

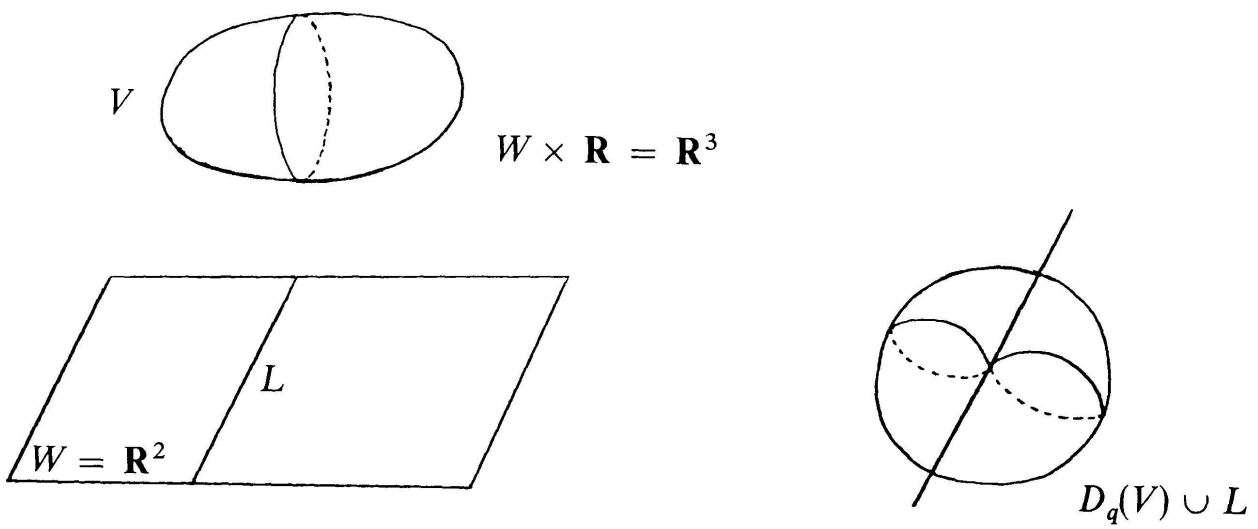

PROPOSITION 3.3. *Given* L, W, V *as above, then* $D_q(V) \cup L$ *is an algebraic subset of* $W \times \mathbf{R}^n$.

Proof: Let $p : \mathbf{R}^m \times \mathbf{R}^n \to \mathbf{R}$ be an overt polynomial of degree e with $V = p^{-1}(0)$ and let q be as above. Define a polynomial $r : \mathbf{R}^m \times \mathbf{R}^n \to \mathbf{R}$ by

$$r(x, y) = q(x)^e \, p\left(x, \frac{y}{q(x)}\right)$$

We claim $r^{-1}(0) = D_q(V) \cup L$. It is easy to see that

$$r^{-1}(0) \cap (W - L) \times \mathbf{R}^n = D_q(V) \cap (W - L) \times \mathbf{R}^n,$$

so it suffices to show that $r^{-1}(0) \cap (L \times \mathbf{R}^n) = L \times 0$. We decompose $p(x, y) = p_e(x, y) + \alpha(x, y)$ where $p_e(x, y)$ is homogeneous of degree e and $\alpha(x, y)$ is a polynomial of degree less than e. Hence if $(x, y) \in r^{-1}(0) \cap (L \times \mathbf{R}^n)$ then $r(x, y) = 0$ and $q(x) = 0$, which implies $r(x, y) = p_e(0, y) = 0$. Then $y = 0$ since p is overt, so $(x, y) \in L \times 0$. Conversely if $(x, y) \in L \times 0$ then $y = 0$ and $q(x) = 0$. Hence $r(x, y) = p_e(0, 0) = 0$, i.e. $(x, y) \in r^{-1}(0) \cap (L \times \mathbf{R}^n)$. □

There is a more useful version of Proposition 3.3 which says that after modifying D_q we can get $D_q(V) \cup L$ to be a projectively closed algebraic set (Proposition 3.1 of [AK_6]). This allows us to iterate this blowing down process.

§4. ISOLATED SINGULARITIES

The topology of real algebraic sets with isolated singularities is completely understood by the following Theorem.

THEOREM 4.1 ([AK_2]). *X is homeomorphic to an algebraic set with isolated singularities if and only if X is obtained by taking a smooth compact manifold W with boundary $\partial W = \bigcup_{i=1}^{r} M_i$, where each M_i bounds, then crushing some M_i's to points and deleting the remaining M_i's.*

$X =$

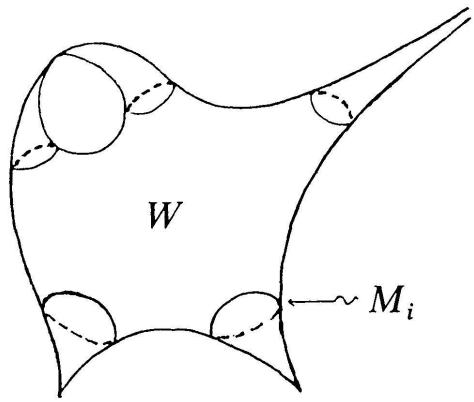

One direction the proof follows from the resolution of singularities [H]. To prove it to the other direction we need the following:

PROPOSITION 4.2. *If a closed smooth manifold M bounds a compact manifold, then it bounds a compact manifold W such that there are transversally intersecting closed smooth codimension one submanifolds $W_1, ..., W_r$ with $W/\cup W_i \approx \mathrm{con}(M)$, in other words $\cup W_i$ is a spine of W.*

Proof: Let $M = \partial Z$ where Z is some closed smooth manifold. Then pick balls D_i, $i = 1, 2, ..., r$ lying in interior (Z) such that:

(a) $\bigcup_i D_i$ is a spine of Z

(b) The spheres $S_i = \partial D_i$ intersect transversally with each other in Z

(c) $\cup D_i - \cup \partial D_i$ is a union of open balls $\bigcup_{j=1}^{s} B_j$.

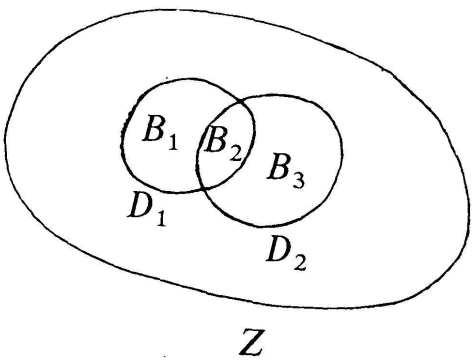

Let $B'_j \subset B_j$ denote a smaller ball. Then $Z_0 = Z - \bigcup_{j=1}^{s} \mathrm{interior}(B'_j)$ is a manifold with spine $\bigcup S_i$, and

$$\partial Z_0 = M \cup \bigcup_{j=1}^{s} \partial B'_j, \qquad \partial B'_j \approx S^m$$

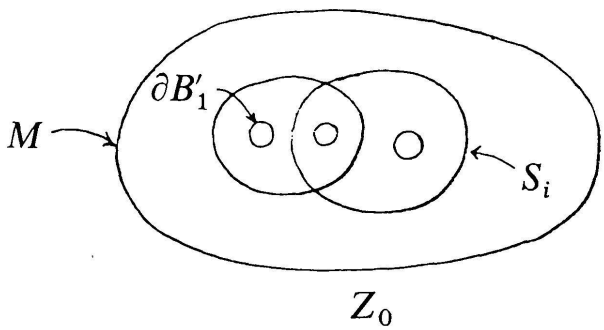

Order $\{B'_j\}$ so that there is an arc from M to $\partial B'_1$ intersecting exactly one S_i. Then attach a 1-handle to ∂Z_0 connecting M to $\partial B'_1$ get $Z_1 = Z_0 \cup$ (1-handle) as in the figure:

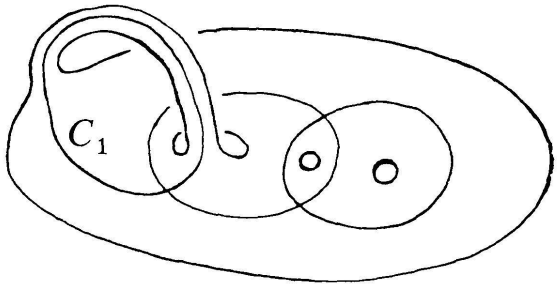

Z_1

Then $\partial Z_1 = M \cup \bigcup_{j=2}^{s} \partial B'_j$ and $\bigcup S_i \cup C_1$ is a spine of Z_1, where C_1 is the circle defined by the core of the 1-handle union of the arc. By continuing this fashion we get Z_s with $\partial Z_s = M$; and the spine of Z_s is transversally intersecting codimension one spheres and circles $\bigcup S_i \cup \bigcup_{j=1}^{s} C_j$. We are finished except C_j are not codimension one. We remedy this by topologically blowing up Z_s along $\bigcup C_j$, i.e. let $W = B(Z_s, \bigcup C_j)$ and let W_i to be the projectified normal bundles $P(C_j, Z_s)$ of C_j (i.e. the blown up circles), and $B(S_i, S_i \cap \bigcup C_j)$ we are done. □

Proof of Theorem 4.1: By Proposition 3.1 it suffices to prove this for one point compactification of X. Hence we can assume that X is compact. Let W be a compact smooth manifold, $\partial W = \bigcup_{i=1}^{r} M_i$ and each M_i bounds. By Proposition 4.2 we can assume $M_i = \partial W_i$ such that each W_i has a spine consisting of union of transversally intersecting codimension one closed smooth submanifolds L_i. Let $M = W \underset{\partial}{\cup} \bigcup W_i$

$M =$

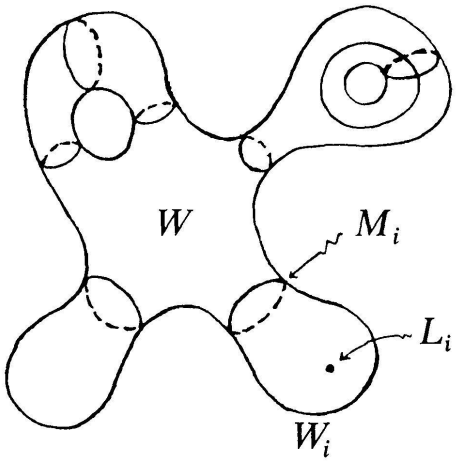

By Theorem 2.12 we can assume that the manifolds $(M; L_1, ..., L_r)$ are pairwise diffeomorphic to nonsingular algebraic sets $(Z; Z_1, ..., Z_r)$. Let $h : Z \to \mathbf{R}$ be an entire rational function with $h|_{Z_i} = i$ (h exists by Lemma 0.1). Let $\lambda : Z \to \mathbf{R}$ be a polynomial with $\lambda^{-1}(0) = \bigcup_i Z_i$. By Proposition 3.2 there exists a nonsingular projectively closed algebraic set $V \subset \mathbf{R}^2 \times \mathbf{R}^n$ and a birational diffeomorphism g making the following commute

$$\begin{array}{ccc} V & \hookrightarrow & \mathbf{R}^2 \times \mathbf{R}^n \\ {}^{g}\uparrow \approx & & \downarrow^{\pi} \\ Z & \xrightarrow[f]{} & \mathbf{R}^2 \end{array}$$

where $f = (h, \lambda)$. Let $L = \{(1, 0), (2, 0), ..., (r, 0)\}$ then by Proposition 3.3 we can blow down V over L algebraically. This gives an algebraic set homeomorphic to X. □

COROLLARY 4.3. *Up to diffeomorphism nonsingular algebraic sets are exactly the interiors of compact smooth manifolds with boundary (possibly empty).*

The following is a local knottedness theorem of real algebraic sets. It is an ambient version of Theorem 4.1. It says that unlike complex algebraic sets all knots can occur as links of singularities.

THEOREM 4.4 ([AK$_4$]). *Let W^m be a compact smooth submanifold of S^{n-1} imbedded with trivial normal bundle with codimension $\geqq 1$. Then there exists an algebraic set $V \subset \mathbf{R}^n$ with $\mathrm{Sing}(V) = \{0\}$ such that $(B_\varepsilon, B_\varepsilon \cap V) \approx (B^n, \mathrm{cone}(\partial W))$ for all small $\varepsilon > 0$, where B_ε is the ball of radius ε centered at 0. In fact $\varepsilon(\partial W)$ is isotopic to $\partial B_\varepsilon \cap V$ in ∂B_ε.*

By taking W to be the Seifert surface of a knot we get an interesting fact.

COROLLARY 4.5. *Any knot $K^{n-3} \subset S^{n-1}$ is isotopic to a link of an algebraic set V in $\mathbf{R}^n$.*

A sketch proof of Theorem 4.4: First identify $W \subset \mathbf{R}^{n-1} \approx S^{n-1} - \infty$, and call $M = \partial W$. Then apply the process of getting nice spines to W^m (Proposition 4.2); i.e. pick a family of discs D_i, $i = 1, ..., r$ in W whose boundaries are in general position, and $W/\cup D_i \approx \mathrm{cone}(M)$ and $\bigcup D_i - \bigcup S_i$ is a disjoint union of open balls $\bigcup B_j$ where $S_i = \partial D_i$. Let W_1 be the manifold obtained by removing a small open ball from each B_j. Now by attaching 1-handles to W_1 as in

Proposition 4.2 we obtain W_2, whose spine consists of $\bigcup S_i$ union circles $\bigcup C_j$, with $\partial W_2 = M$.

Observe that this whole process can be done inside $\mathbf{R}^{n-1}$ and C_j and S_i are unknotted in $\mathbf{R}^{n-1}$

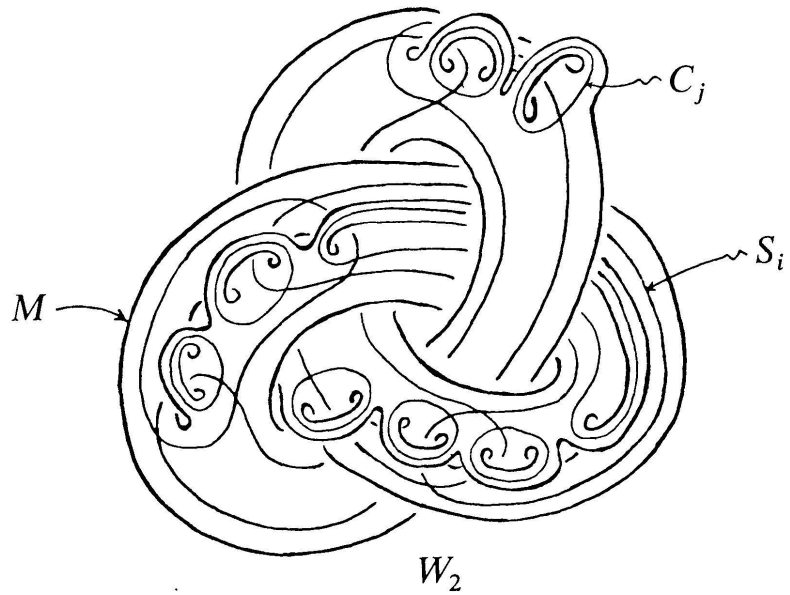

We claim that there is disjointly imbedded $m - 1$ spheres $T_j, j = 1, ..., s$ in W_2 such that

(1) Each T_j is unknotted in $\mathbf{R}^{n-1}$.

(2) Each T_j meets C_j at a single point, and $T_j \cap C_i = \emptyset$ for $i \neq j$.

(3) For each i there is $B_i \subset \{1, 2, ..., s\}$ so that $S_i \cup \bigcup_{j \in B_i} T_j$ separates W_2.

This can be easily done as in the following picture.

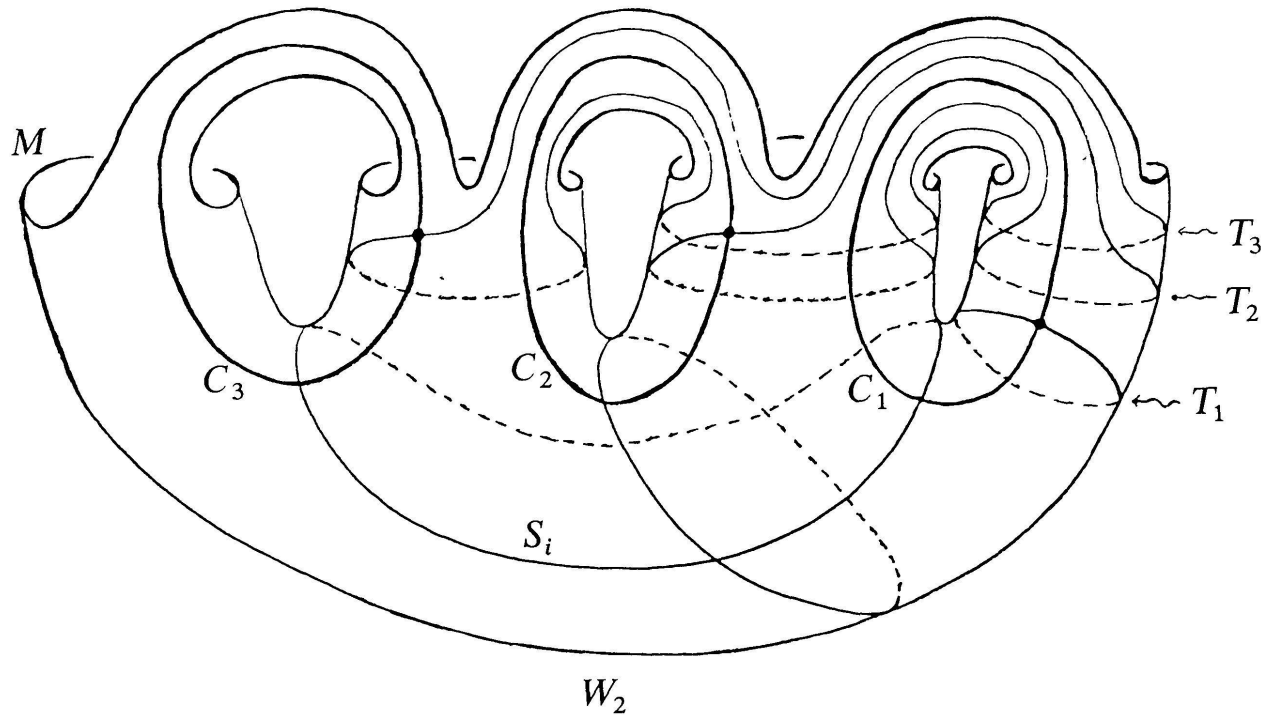

(1) and (2) are easily checked from the picture. To see (3), let $B_i = \{j \mid C_j \cap S_i \neq \emptyset\}$.

Let $W_3 = W_2 \underset{\partial}{\cup} - W_2$. The imbedding $W_2 \subset \mathbf{R}^{n-1}$ can be extended to an imbedding of W_3. Since T_j and C_j are unknotted and by (2), we can isotop W_3 so that $T_j \cup C_j$ in W_3 coincides with $S^{m-1} \cup S^1$ in $(S^{m-1} \times S^1)_j$, where $(S^{m-1} \times S^1)_j$, $j = 1, ..., s$ are disjointly imbedded copies of the standard $S^{m-1} \times S^1$ in $\mathbf{R}^{n-1}$. We can assume that some open neighborhoods of these sets in W_3 and $(S^{m-1} \times S^1)_j$ also coincide. By Theorem 2.3 and Remark 2.4 we can isotop W_3 to a component of a nonsingular algebraic set Z fixing $T_j \cup C_j$ for all j. In fact after a minor adjustment (to proof of Theorem 2.3) we can assume that Z is projectively closed. Continue to call isotoped copy of S_i by S_i.

Since as codimension one homology classes $[S_i] = [\bigcup_{j \in B_i} T_j]$ and $\bigcup T_j$ is a nonsingular algebraic set, S_i can be made a nonsingular algebraic set for each i (Theorem 2.6). Hence the spine $L = \bigcup S_i \cup \bigcup C_j$ of $W_2 \subset Z$ can be assumed to be an algebraic set. Since Z is projectively closed so is L.

Let p, q be overt polynomials with $p^{-1}(0) = Z$ and $q^{-1}(0) = L$. Define

$$V = \{(x, t) \in \mathbf{R}^{n-1} \times \mathbf{R} \mid t^{2e+1} = q^*(x, t)^2, p^*(x, t) = 0\}$$

where $p^*(x, t) = t^d p(x/t)$, $q^*(x, t) = t^e q(x/t)$ where d = degree p, e = degree q. If $(x, t) \in V$ then $t \geqq 0$; and if $t = 0$ then $x = 0$ since p is overt.

$$(\mathbf{R}^{n-1} \times \varepsilon, (\mathbf{R}^{n-1} \times \varepsilon) \cap V) \approx (\mathbf{R}^{n-1}, q^{-1}(\varepsilon) \cap Z) \approx (\mathbf{R}^{n-1}, M),$$

since $q^{-1}(\varepsilon) \cap Z \approx \partial W_2 = M$. We are almost done.

Let $S_\varepsilon^{n-1} = \{(x, t) \in \mathbf{R}^{n-1} \times \mathbf{R} \mid |x|^2 + t^2 = \varepsilon^2\}$, and $\varphi_\varepsilon : \mathbf{R}^{n-1} \to S_\varepsilon^{n-1}$ be the imbedding $\varphi_\varepsilon(y) = (1+|y|^2)^{-1/2}(\varepsilon y, \varepsilon)$. Then

$$\varphi_\varepsilon^{-1}(S_\varepsilon^{n-1} \cap V) = \{y \in \mathbf{R}^{n-1} \mid p(y) = 0, \quad q^4(y)(1+|y|^2) = \varepsilon^2\}$$

which is isotopic to M in $\mathbf{R}^{n-1}$ for all small $\varepsilon > 0$. Hence $(S_\varepsilon^{n-1}, S_\varepsilon^{n-1} \cap V) \approx (S^{n-1}, M)$ for all small $\varepsilon > 0$. □

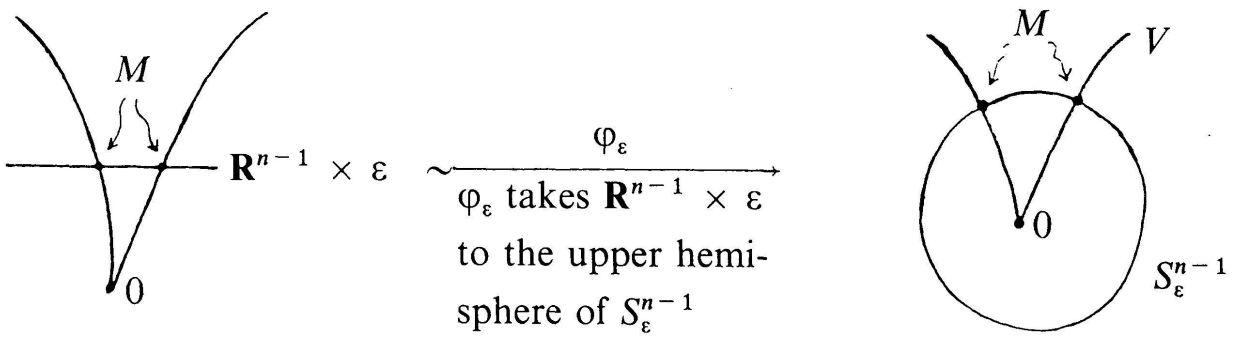

§5. Algebraic Structures on P.L. Manifolds

To prove that P.L. manifolds are homeomorphic to algebraic sets we first define a class of stratified spaces (A-spaces) which admit "topological resolutions" to smooth manifolds, then we prove that these spaces are homeomorphic to algebraic sets. Then the result is achieved by showing that this class is big enough to contain all P.L. manifolds.

Define A_0-spaces to be smooth manifolds. Inductively let A_k-*spaces* to be spaces in the form $M = M_0 \bigcup_{\partial} N_i \times \text{cone}(\Sigma_i)$ where M_0 is an A_{k-1}-space and Σ_i are boundaries of compact A_{k-1}-spaces and N_i are smooth manifolds. The union is taken along codimension zero subsets of ∂M_0 and $N_i \times \Sigma_i \subset N \times \text{cone}(\Sigma_i)$. We define

$$\partial M = (\partial M_0 - \bigcup N_i \times \Sigma_i) \cup \bigcup \partial N_i \times \text{cone}(\Sigma_i),$$

hence boundaries of A_k-spaces are A_k-spaces. We call a space an A-*space* if it is an A_k-space for some k. If in the above definition we also assume that each Σ_i is a P.L. sphere then we call the resulting A-space A-*manifold*. A-manifolds are P.L. manifolds equipped with above special structure. A-spaces are more general than A-manifolds, for example they don't have to be manifolds.

A-spaces are constructed so that they can be "topologically" resolved. If M is an A_k-space $M_0 \cup \bigcup N_i \times \text{cone}(\Sigma_i)$, we can choose compact A_{k-1} spaces W_i with $\partial W_i = \Sigma_i$. We can construct the obvious A_{k-1} space $\tilde{M}_{k-1} = M_0 \cup \bigcup N_i \times W_i$. There is the obvious map $\pi_k : \tilde{M}_{k-1} \to M$ which is identity on M_0 and takes $N_i \times W_i$ to $N_i \times \text{cone}(\Sigma_i)$ by collapsing $N_i \times \textit{spine}(W_i)$ onto $N_i \times$ point. By iterating this process we get a resolution tower:

$$\tilde{M} = \tilde{M}_0 \xrightarrow{\pi_1} \tilde{M}_1 \xrightarrow{\pi_2} \dots \to \tilde{M}_{k-1} \xrightarrow{\pi_k} M$$

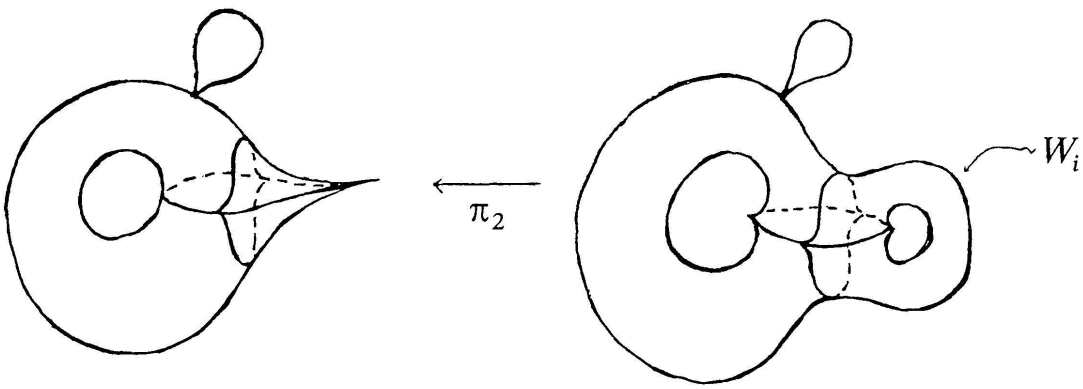

an A_2 space M $\tilde{M}_1$

with $\tilde{M}$ a smooth manifold. In fact by proving a generalized version of Proposition 4.2 we can adjust W_i so that each W_i has a spine S_i consisting of transversally intersecting A_{k-1} spaces without boundaries, and then each map π_k collapses $N_i \times S_i$ to $N_i \times$ point. This makes $\pi : \tilde{M} \to M$, where $\pi = \pi_k \circ \ldots \circ \pi_1$, very much analogous to a multiblowup.

THEOREM 5.1 ([AK$_6$]). *The interior of any compact A-space is homeomorphic to a real algebraic set. Furthermore the natural stratification on this algebraic set coincides with the stratification of the A-structure.*

Theorem 5.3 tells that the class of A-spaces contain all compact P.L. manifolds hence:

COROLLARY 5.2. *The interior of any compact P.L. manifold is P.L. homeomorphic to a real algebraic set.*

The idea of the proof Theorem 5.1 goes as follows. First define $\mathcal{O}_*(V)$, a bordism group for an algebraic set V. It is the usual bordism group of maps of A-spaces into V modulo the subgroup generated by maps $X \times N \to N \to V$ where X is an A-space, N is a nonsingular algebraic set and the map is the projection followed by an entire rational map $N \to V$. Then inductively we prove a generalized version of Theorem 2.8: that is if $M \subset V$ is an imbedding of a compact A-space without boundary into a nonsingular algebraic set V such that M represents 0 in $\mathcal{O}_*(V)$, then M can be moved to an algebraic subset Z of $V \times \mathbf{R}^n$ by a small isotopy (for some n). This implies the proof of Theorem 5.1 (by taking $V = \mathbf{R}^n$). Because one point compactification of an interior of a compact A-space is a compact A-space without boundary hence is homeomorphic to an algebraic set by above (and use Proposition 3.1 (b)).

Roughly the proof of the above claim proceeds as follows. Let $M = M_0 \cup N \times \mathrm{cone}(\Sigma) \subset V$ then the bordism condition on M implies that $[N] \in \eta_*^A(V)$, so by Theorem 2.8 we can assume that N is a nonsingular algebraic subset of $V \times \mathbf{R}^m$ for some m. Define $B_1(V \times \mathbf{R}^m, N) = B(V \times \mathbf{R}^m \times \mathbf{R}, N \times 0)$, then this contains a natural nonsingular algebraic subset $N_1(V \times \mathbf{R}^m, N) = B(N \times \mathbf{R}, N \times 0)$ which is diffeomorphic to N. By continuing in this fashion let

$$B_k(V \times \mathbf{R}^m, N) = B\big(B_{k-1}(V \times \mathbf{R}^m, N) \times \mathbf{R}, N_{k-1}(V \times \mathbf{R}^m, N) \times 0\big),$$
$$N_k(V \times \mathbf{R}^m, N) = B\big(N_{k-1}(V \times \mathbf{R}^m, N) \times \mathbf{R}, N_{k-1}(V \times \mathbf{R}^m, N) \times 0\big).$$

Then we get a generalized algebraic multiblowup $\pi_k : B_k(V \times \mathbf{R}^m, N) \to V \times \mathbf{R}^m$

such that $\pi_k^{-1}(N)$ is a union of codimension one submanifolds $\bigcup S_i$ in general position and

$$\pi_k^{-1}(V \times \mathbf{R}^m - N) = (V \times \mathbf{R}^m - N) \times \mathbf{R}^k .$$

Since M is an A_k-space, $\Sigma = \partial W$ for some compact A_{k-1}-space W. By proving a generalized version of Proposition 4.2 we can assume that the spine of W is a transversally intersecting codimension one A_{k-1} subspaces $\bigcup L_i$ with $\partial L_i = \emptyset$. We then imbed the A_{k-1} *space* $M_{k-1} = M_0 \cup N \times W$ (blown up M) into $B_k(V \times \mathbf{R}^m, N)$ such that

(i) M_{k-1} is transversal to $\bigcup S_i$ with $M_{k-1} \cap \bigcup S_i = N \times \bigcup L_i$,

(ii) $\pi_k(M_{k-1})$ is isotopic to M by a small isotopy,

(iii) M_{k-1} represents 0 in $\mathcal{O}_*(B_k(V \times \mathbf{R}^m, N))$.

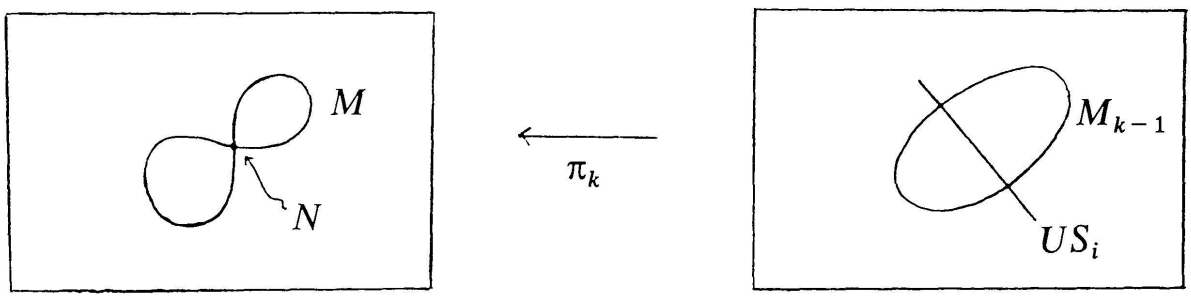

$V \times \mathbf{R}^m$ $\qquad$ $B_k(V \times \mathbf{R}^m, N)$

This is somewhat hard to prove (see [AK_6]). Then by induction, with a small isotopy M_{k-1} can be moved to an algebraic subset Z of $B_k(V \times \mathbf{R}^m, N) \times \mathbf{R}^s$ for some s. Hence Z still satisfies (i) and (ii), after composing π_k with the obvious projection. Then by using a version of Proposition 3.3 we blow down Z to get an algebraic set homeomorphic to M.

The class of A-spaces does not contain all algebraic sets. For example the Whitney umbrella $x^2 = zy^2$ is not an A-space.

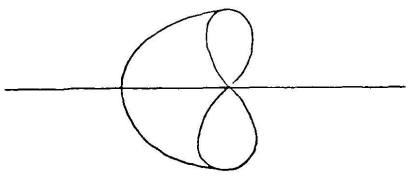

Therefore to classify real algebraic sets we need a bigger class of resolvable spaces (§6).

In order to show that P.L. manifolds admit A-structures one has to appeal to algebraic topological methods. This is done in [AT_2], here is a brief summary of

[AT$_2$]: One first verifies that A_k-structures on P.L. manifolds obey the usual structure axioms ([L]). For example they satisfy the product structure axiom i.e. for any P.L. manifold M an A_k-structure $(M \times I)_\gamma$ on $M \times I$ is concordant to $M_\gamma \times I$ where M_γ is an A_k-structure on M. Using [W] we can define an r-dimensional A_k-thickening on X to be a simple homotopy equivalence $X \xrightarrow{f} W^r$ where W^r is an r-dimensional A_k-manifold (with boundary). Let $T_k^r(X)$ to be the set of all r-dimensional A_k-thickenings on X with the equivalence relation: $(W_1, f_1) \sim (W_2, f_2)$ if there is an $(r+1)$-dimensional A_k-thickening (W, F) with $\partial W = W_1 \cup W_2$ and making the following diagram commute up to homotopy:

$$\begin{tikzcd}
 & W_1 \arrow[dr, hook] & \\
X \arrow[ur, "f_1"] \arrow[rr, "F"'] \arrow[dr, "f_2"'] & & W \\
 & W_2 \arrow[ur, hook] &
\end{tikzcd}$$

There are natural maps $T_k^r(X) \to T_k^{r+1}(X)$ given by $(W, f) \mapsto (W \times I, f \times id)$, so using these maps we can take the direct limit $T_k(X) = \varinjlim T_k^r(X)$. It follows that the functor $X \mapsto T_k(X)$ is a representable functor (see [Sp]), hence by Brown representability theorem there exists a classifying space B_{A_k} such that $T_k(X) = [X; B_{A_k}]$. There are natural indusions $B_{A_{k-1}} \to B_{A_k}$, and let $B_A = \varinjlim B_{A_k}$. There is a natural forgetful map $B_A \xrightarrow{\pi} B_{PL}$. Then one shows that the usual structure theorem holds: Namely that a compact P.L. manifold M has an A-structure if and only if the normal bundle map (thickening map) $M \xrightarrow{\nu_M} B_{PL}$ lifts to B_A. Let PL/A be the homotopy theoretical fibre of π, then:

THEOREM 5.3 ([AT$_2$]). *$B_A \xrightarrow{\pi} B_{PL}$ is a trivial fibration, i.e. $B_A \simeq B_{PL} \times PL/A$ and PL/A is a product of Eilenberg-Mclain spaces $K(\mathbf{Z}/2\mathbf{Z}, n)$'s. The number ρ_n of $K(\mathbf{Z}/2\mathbf{Z}, n)$ for each n in this product is given by*

$$\rho_n = \begin{cases} 0 & \text{if } n < 8, \\ 26 & \text{if } n = 8, \\ \text{infinite but countable} & \text{if } n > 8. \end{cases}$$

COROLLARY 5.4. *Every compact P.L. manifold M has an A-structure and the number of different A-structures (up to A-concordance) on M is given by*

$$\bigoplus_{n \geq 8} H^n(M; \pi_n(PL/A)).$$

Briefly the proof of Theorem 5.3 goes as follows: By a standard argument, $\pi_i(PL/A_k)$ coincides with the concordance classes of A_k-structures on S^i (the exotic A_k-spheres). Since $\pi_i(PL/A) = \varinjlim \pi_i(PL/A_k)$ it follows by definitions that the inclusion $\pi_i(PL/A) \to \eta_i^A$ is an injection, where η_i^A is the cobordism group of i-dimensional A-manifolds. Then we construct a Thom space MA such that $\pi_i(MA) \approx \eta_i^A$ (by using a transversality argument for A-manifolds). Then it turns out that the map $\eta_i^A \to H_i(B_A; \mathbf{Z}/2\mathbf{Z})$ given by $\{M \xrightarrow{\nu_M} B_A\} \mapsto (\nu_M)_* [M]$ is an injection. We can put these maps into the following commutative diagram:

$$\begin{array}{ccccc} & & \pi_i(PL/A) & \to & \eta_i^A \\ & \overset{h}{\swarrow} & \downarrow f & & \downarrow \\ H_i(PL/A; \mathbf{Z}) & \xrightarrow{r} & H_i(PL/A; \mathbf{Z}/2\mathbf{Z}) & \xrightarrow{g} & H_i(B_A : \mathbf{Z}/2\mathbf{Z}) \end{array}$$

where h is the Hurewicz map, r is the reduction and g is induced by inclusion. Since the other two maps are injections then f must be injection. In fact f is a split injection since it is a map between $\mathbf{Z}/2\mathbf{Z}$-vector spaces. Hence h is a split injection. This implies that all k-invariants of PL/A is zero, i.e. PL/A is a product of Eilenberg-Mclaine spaces $\prod K(\mathbf{Z}/2\mathbf{Z}, n_i)$. Then by dualizing the split injection $g \circ f$ we get a surjection

$$H^i(B_A; \mathbf{Z}/2\mathbf{Z}) \xrightarrow{\lambda} \mathrm{Hom}(\pi_i(PL/A); \mathbf{Z}/2\mathbf{Z})$$

Let $\delta_{n_i} \in H^{n_i}(B_A; \mathbf{Z}/2\mathbf{Z})$ such that $\lambda(\delta_{n_i})$ is the generator of $\mathbf{Z}/2\mathbf{Z}$.

$$\delta = \prod \delta_{n_i} \text{ defines a map } B_A \to \prod_i K(\mathbf{Z}/2\mathbf{Z}, n_i) = PL/A\,.$$

Then the map $\pi \times \delta : B_A \to B_{PL} \times PL/A$ turns out to be the desired splitting. The calculation of ρ_n can be done by using the geometric interpretation of $\pi_*(PL/A)$.

The set $\mathscr{S}_A(M) = \bigoplus_n H^n(M; \pi_n(PL/A))$ measures the number of different "topological resolutions" of M, up to concordance (i.e. A-structures). Therefore often $\mathscr{S}_A(M)$ is infinite; and $\mathscr{S}_A(M^8)$ has 2^{26} elements for any closed 8-manifold M^8.

§6. On classification of Real Algebraic Sets

The resolution and complexification properties of real algebraic sets impose many restrictions on the underlying topological spaces. To give a topological characterization of algebraic sets one has to find all such properties, such that a

set is homeomorphic to an algebraic set if and only if it satisfies these properties. Call a polyhedron V an *Euler space* if $\chi(\text{Link}\ (x))$ is even for all vertices $x \in V$. Recall that all algebraic sets are Euler spaces, in fact in low dimensions this topological property completely determines compact algebraic sets (and hence all algebraic sets by Proposition 3.1).

THEOREM 6.1. *Let X be a compact polyhedron of dimensions $\leqq 2$. Then X is homeomorphic to a real algebraic set if and only if X is an Euler spaces.*

This theorem was announced in [AK_2] and a proof was given [AK_7]. Since [AK_7] did not appear in print we repeat that proof here. This proof is very useful to understand the high dimensional case. It is done by first constructing a "topological resolution" for X then proceeding as in the proof of Theorem 5.1.

Proof: The proof of case $\dim(X) \leqq 1$ follows from Theorem 4.1, so assume that $\dim(X) = 2$. Let X' be the barycentric subdivision of X. Let $X_i =$ the i-skeleton of X'. Then (exercise) X_1 satisfies the even local Euler characteristic condition also. We will say a one simplex in X' has type i ($i = 0,1$) if the number of faces containing it is congruent to $2i$ mod 4. Let X_{1i} be the unions of edges of type i, then (exercise) X_{10} and X_{11} each satisfy the even local Euler characteristic condition. Hence, they have resolutions $\pi_{1i} : Z_{1i} \to X_{1i}$ where Z_{1i} are unions of circles, and the π_{1i} are diffeomorphisms over $X_{1i} - X_0$.

First, we imbed X_0 in $\mathbf{R}^4$. Now let $V_1 = B(\mathbf{R}^4, X_0)$ and let $\mu_1 : V_1 \to \mathbf{R}^4$ be the projection. We may imbed $Z_{10} \cup Z_{11}$ in V_1 so that $\mu_1(Z_{1i}) \cup X_0$ is homeomorphic to X_{1i} and $\mu_1|_{Z_{1i}} = \pi_{1i}$. Since V_1 has totally algebraic homology, by Theorem 2.8 we may assume after replacing V_1 by $V_1 \times \mathbf{R}^n$ that each component of each Z_{1i} is a nonsingular algebraic subset of V_1. We now let $V_2 = B(V_1, Z_{10} \cup Z_{11})$ and $\lambda_2 : V_2 \to V_1$ be the projection and $\mu_2 : V_2 \to \mathbf{R}^4$ be the composition of μ_1 and λ_2. We will now imbed a surface Z_2 in V_2 so that

$$\mu_2(Z_2) \cup \mu_1(Z_{10} \cup Z_{11}) \cup X_0$$

is homeomorphic to X.

We pick some pairing of the faces coming into each edge, i.e. there are an even number of them, and we divide them into groups of two. This gives a resolution of $X - X_0$, namely, take the disjoint union of the faces with vertices deleted and identify two edges if they are in the same group of two. This will be part of our surface Z_2, but we will not imbed it until later. We will first imbed the part of Z_2 lying over a small neighborhood of X_0.

Take any vertex v of X_0 and let e be an edge containing v, let $i = 0, 1$ be such that $e \subset X_{1i}$. Then $e = \mu_1(U)$ for some interval U in Z_{1i}. Let there be $4k + 2i$ faces containing e. Pick a point p in $\mu_2^{-1}(v) \cap \lambda_2^{-1}(u)$ where $u \in U$ is the point so that $\mu_1(u) = v$. Then in a neighborhood of p, we have two codimension one submanifolds $\mu_2^{-1}(v)$ and $\lambda_2^{-1}(Z_{1i})$. We imbed $k + i$ squares in a neighborhood of p as indicated below.

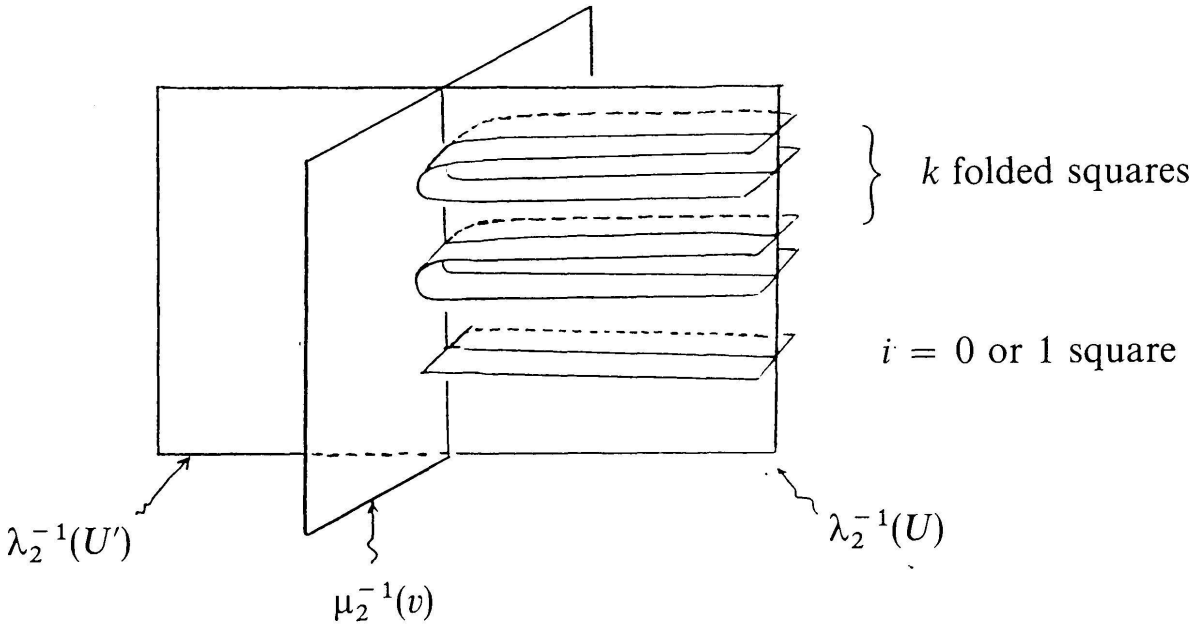

We do this for each edge containing v. Notice that one of these edges is $\mu_1(U')$ for some interval U' in Z_{1i} so $U' \cap U = u$, i.e. the interval on the other side of u. If $i = 1$, we connect the bottom squares of the two sides together as shown below.

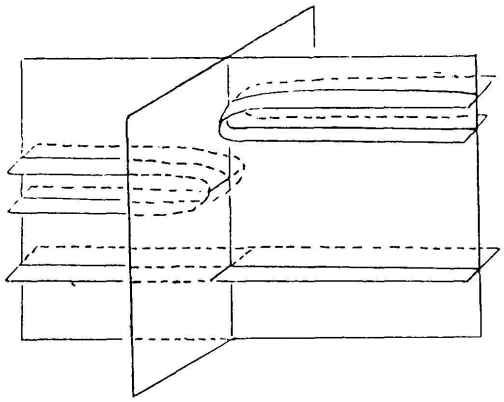

In the end, we have a bunch of squares

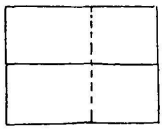

whose horizontal midlines are mapped by μ_2 to v and whose vertical midlines are mapped by λ_2 to $Z_{10} \cup Z_{11}$. Furthermore, this map is either equivalent to x^2 or x if we choose our imbedding nicely. To each corner of each square, we may assign a face of X' which contains v so that the following conditions are met: each face containing v is assigned to exactly two corners, if e is the edge containing μ_2 of the top half of the vertical midline, then the faces assigned to the top two corners each contain e and are, in fact, paired, and likewise, for the bottom two corners and the bottom midline half. We may now form a number of polygons by taking the vertical side edges of all the squares and identifying their endpoints, if the corresponding faces are the same. We claim these polygons are the boundary of a surface S which contains L, a union of arcs and circles in general position so that S is a regular neighborhood of L, $\partial S \cap L$ is the union of the endpoints of all the arcs in L and $\partial S \cap L$ is also the union of all the midpoints of the sides of the boundary polygons.

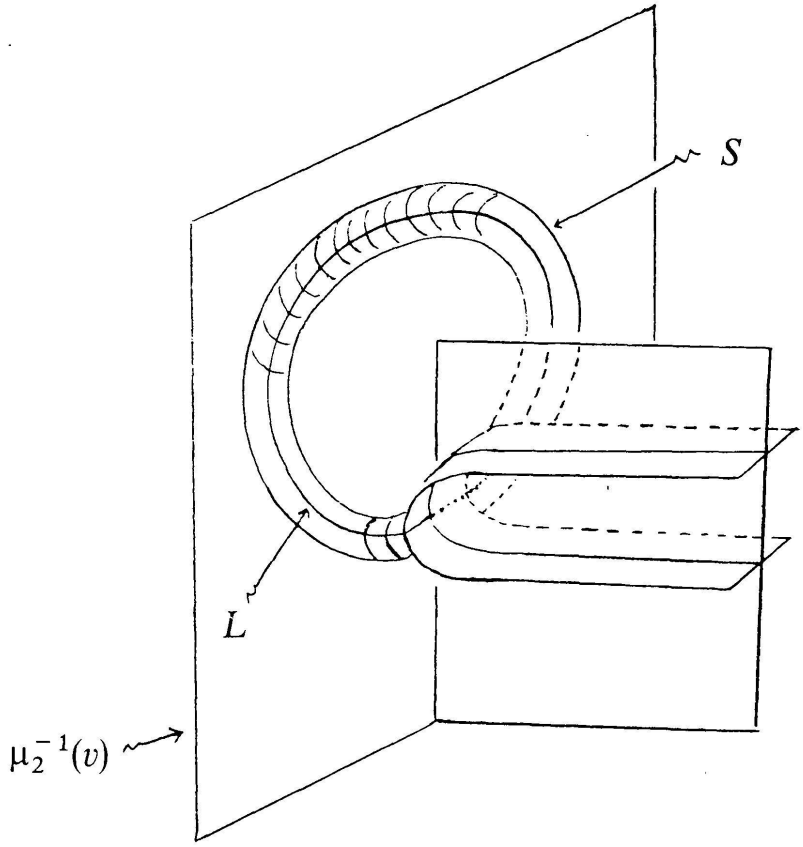

Given this, we imbed S in V_2 so that S misses $\lambda_2^{-1}(Z_{10} \cup Z_{11})$ and $\mu_2^{-1}(X_0 - v)$ and so $\mu_2^{-1}(v) \cap S = L$, and so S intersects the squares we have already imbedded in the union of the side edges of all the squares, furthermore, these intersect in the natural way so that the point of $L \cap \partial S$ which corresponds to the midpoint of a side of a polygon, is mapped to the midpoint of the corresponding side of a square. So, letting S' be S union all the squares, we have that $\mu_2(S')$ is

homeomorphic to the star of v in the union of the faces of X. This is because clearly $\mu_2(S')$ is the cone on $\mu_2(\partial S')$, but $\mu_2(\partial S')$ is obtained by taking the polygon formed by all the top and bottom sides of the squares and identifying endpoints corresponding to the same face and identifying midpoints of all sides which map to the same edge of X'. This is clearly the link of v in the closure of all faces.

We do this for all the vertices and we get a surface S''. We now add some more squares. For each edge e of X', let v and v' be its vertices. We have previously paired up the faces containing e. For each pair of faces, we have a corresponding top or bottom side of a square over v, and a top or bottom side of a square over v' (namely the sides between the two corners assigned to the pair), we connect these two sides with another square as shown (S is not shown).

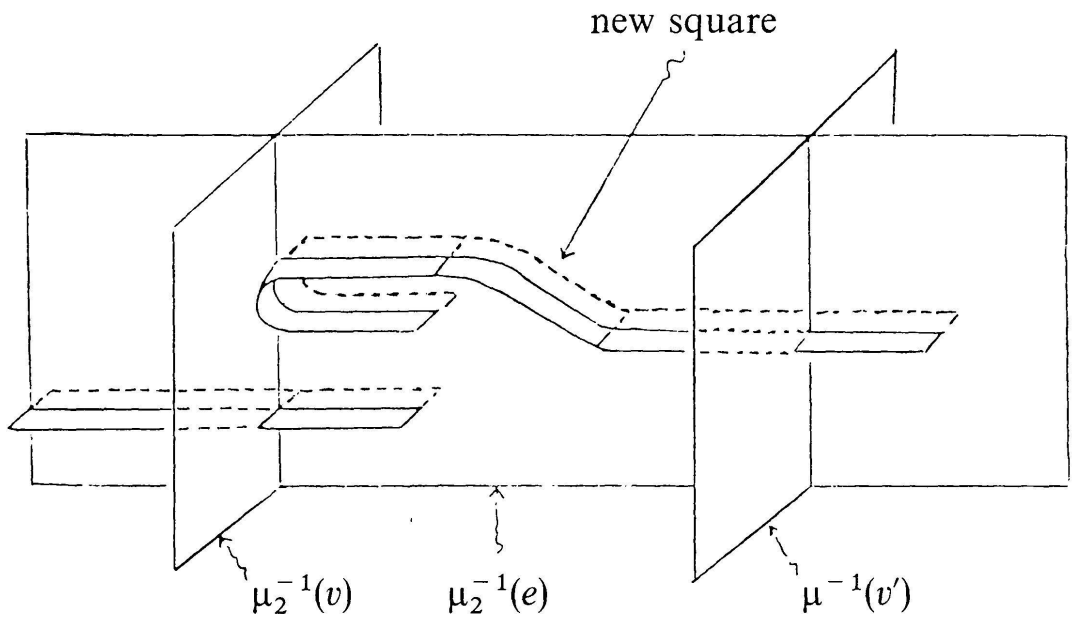

If we do this for each pair of faces coming into each edge of X', we get a surface S^* imbedded in V_2 so that $\mu_2(S^*)$ is homeomorphic to a neighborhood of X_1 in the union of the faces of X'. It is now easy to imbed a bunch of discs (one for each face of X') and so get a surface Z_2 in V_2, so that $\mu_2(Z_2)$ is the union of the faces of X' and so

$$\mu_2(Z_2) \cup \mu_1(Z_{10} \cup Z_{11}) \cup X_0$$

is homeomorphic to X.

We could now try to approximate Z_2 by a nonsingular algebraic set and then blow down to finish off the proof, but the problem is Z_2 is not stable, i.e. Z_2 is not

transverse to $\mu_2^{-1}(X_0)$. However, we may, after replacing V_2 by $V_2 \times \mathbf{R}^k$, assume that $Z_2 \cap \mu_2^{-1}(X_0)$ is a union of nonsingular algebraic sets. An exercise below shows that if we blow up along each of these algebraic sets twice, then Z_2 becomes transverse to $\mu_2^{-1}(X_0)$. Then we are able to finish off by approximating Z_2 by an algebraic set (Theorem 2.8) and blowing down, first over $Z_{10} \cup Z_{11}$ and then over X_0 (Proposition 3.3).

We deferred the proof that the polygon bounds the surfaces S, so we give it here. First, by induction, we may assume all polygons have either one or two sides, for we may take three sides and fill in part of the surface and reduce to the problem with those three sides replaced by one side (see below).

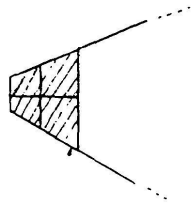

The shaded region is filled in part, + is part of L. If we can fill in the rest, then adding on  will fill in all of it.

But we can easily fill in a polygon with two sides, and we can also fill in two one sides. Since the total number of sides is even, we are done.

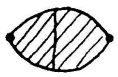

two sides filled in

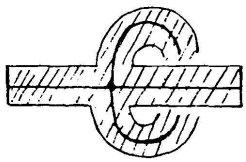

two one-sides filled in

Exercise: Think of $\mathbf{R}^n$ as $\{(x, y, z, w) \mid x, y, z \in \mathbf{R} \text{ and } w \in \mathbf{R}^{n-3}\}$. Let $S = \{z = x^a y^b, w = 0\}$ and $T = \{z = 0\}$. Blow up along the x axis twice and along the y axis twice, and show that after blowing up S becomes transverse to the inverse image of T, (assuming $a = 1, 2$ and $b = 1$ or 2). Note that by imbedding the S in the above proof correctly, we may assume that locally it looks like this with $T = \mu_2^{-1}(v)$. □

The proof of the 2-dimensional case is done by first constructing an appropriate topological resolution. In the general case this leads us to make the following definition. A *topological resolution tower* $\{V_i, V_{ji}, p_{ji}\}$ is a collection of smooth manifolds V_i, $i = 0, ..., n$, subsets $V_{ji} \subset V_i$, $j = 0, ..., i - 1$ and maps $p_{ji} : V_{ji} \to V_j$ satisfying the following properties:

(I) $p_{ji}(V_{ji} \cap V_{ki}) \subset V_{kj}$ for $k < j < i$.

(II) $p_{kj} \circ p_{ji}|_{V_{ji} \cap V_{ki}} = p_{ki}|_{V_{ji} \cap V_{ki}}$ for $k < j < i$.

(III) $p_{ji}^{-1}(\bigcup_{m \leq k} V_{mj}) = V_{ji} \cap \bigcup_{m \leq k} V_{mi}$.

(IV) V_{kj} is a union of codimension one smooth submanifolds of V_j in general position; we call them the sheets of V_{kj}. If S is a sheet of V_{kj} then $p_{ji}^{-1}(S)$ is the intersection of V_{ji} with a union of sheets of $\bigcup_{m \leq k} V_{mi}$.

(V) p_{ji} is smooth on each sheet of V_{ji}, and

$$p_{ji} : V_{ji} - \bigcup_{k<j} V_{ki} \to V_j - \bigcup_{k<j} V_{kj}$$

is a locally trivial fibration.

(VI) For any $q \in V_{ji}$ let $q_i = q$, $q_j = p_{ji}(q)$.

Then there are smooth local coordinates

$$\theta_a : (U_a, 0) \overset{\approx}{\to} (V_a, q_a), \; a = i, j,$$

where U_a is an open neighborhood of 0 in some $\mathbf{R}^{c_{a0}} \times \mathbf{R}^{c_{a1}} \times \ldots \times \mathbf{R}^{c_{aa}}$ such that:

$$(1)\ \theta_a^{-1}(V_{ta}) = \begin{cases} \emptyset & \text{if } c_{at} = 0, \\ \{x \mid \prod_{s=1}^{c_{at}} x_{ts} = 0\} \cap U_a & \text{if } c_{at} \neq 0, \end{cases}$$

$$(2)\ [\theta_j^{-1} \circ p_{ji} \circ \theta_i(x)]_{km} = \prod_{t=0}^{k} \prod_{s=1}^{c_{it}} x_{ts}^{I_{km}^{ts}} \cdot \varphi_{km}(x) \quad \text{if } k < j,$$

where I_{km}^{ts} is a nonnegative integer, and each φ_{km} is a nowhere zero smooth function. x_{ts} denotes the s-th coordinate of x in $\mathbf{R}^{c_{it}}$, and $[\theta_j^{-1} \circ p_{ji} \circ \theta_i(x)]_{km}$ denotes the m-th coordinate of $\theta_j^{-1} \circ p_{ji} \circ \theta_i(x)$ in $\mathbf{R}^{c_{jk}}$.

Even though (VI) looks like an algebraic condition it is a topological condition. It says that topologically the map p_{ji} has only certain types of singularities (i.e. it folds or crushes). We call a topological resolution tower $\{V_i, V_{ji}, p_{ji}\}$ *an algebraic resolution tower* if all V_i, V_{ji} are compact algebraic sets and p_{ij} are entire rational functions.

The realization $|\mathscr{T}|$ of a (topological or algebraic) resolution tower $\mathscr{T} = \{V_i, V_{ji}, p_{ji}\}$ is the quotient space $\bigcup V_i / x \sim p_{ji}(x)$ for $x \in V_{ji}$. $|\mathscr{T}|$ is a stratified space with i-th stratum equal to $V_i - \bigcup_{j<i} V_{ji}$. It turns out that if $\mathscr{T}$ is an algebraic resolution tower then $|\mathscr{T}|$ is an algebraic set. $|\mathscr{T}|$ is a generalization of an A-space.

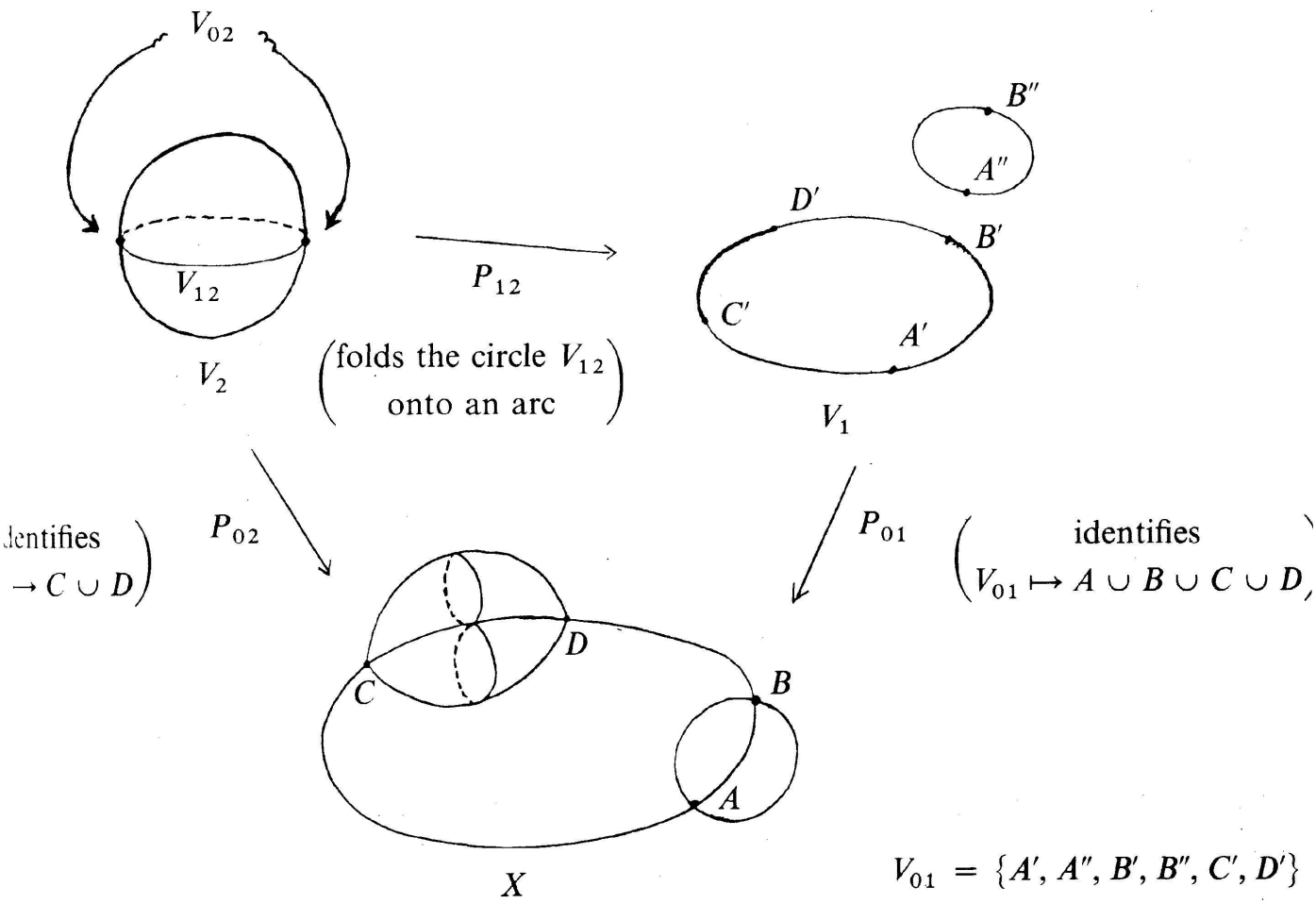

Real algebraic sets are obvious candidates for realizations of topological resolution towers: If X is a real algebraic set, it has an algebraic stratification

$$X_0 \subset X_1 \subset \ldots \subset X_{n-1} \subset X_n = X$$

with $\mathrm{Sing}(X_i) \subset X_{i-1}$, $i = 1, \ldots, n$. Then the resolution of singularities theorem [H] says that there is a multiblowup:

$$V_n = Z_n \xrightarrow{\pi_n} Z_{n-1} \to \ldots \to Z_1 \xrightarrow{\pi_1} Z_0 = X$$

with $\pi_1 : Z_1 \to Z_0$ is a multiblowup of X which resolves the singularities of X_1, i.e. there is a nonsingular $V_1 \subset Z_1$ making the following commute

$$\begin{array}{ccc} V_1 & \hookrightarrow & Z_1 \\ \downarrow & & \downarrow \pi_1 \\ X_1 & \hookrightarrow & Z_0 \end{array}$$

If $\pi_{ji} : Z_i \to Z_j$ is the composition projection, then π_{i+1} is a multiblowup of Z_i which resolves the singularities of the strict preimage of X_{i+1} under π_{0i}, i.e. there is a nonsingular $V_{i+1} \subset Z_{i+1}$ and the commutative diagram

$$\begin{array}{ccc} V_{i+1} & \hookrightarrow & Z_{i+1} \\ \downarrow & & \downarrow_{0,i+1} \\ X_{i+1} & \hookrightarrow & Z_0 \end{array}$$

Let $V_{ji} = \pi_{ji}^{-1}(V_j) \bigcap V_i$ and $\pi_{ji}|_{V_{ji}} = p_{ji} : V_{ji} \to V_j$. Then one can show that

$$X \approx \bigcup V_i / p_{ji}(x) \sim x\,,$$

for $x \in V_{ji}$.

In fact after refining this process one gets:

THEOREM 6.2. *A set is an algebraic set if and only if it is homeomorphic to a realization* $|\mathscr{T}|$ *of some algebraic resolution tower* $\mathscr{T} = \{V_i, V_{ji}, p_{ji}\}$.

Hence we have natural maps

$$\begin{tikzcd} \left\{\text{Algebraic sets}\right\} \arrow[rr, "\tau"] \arrow[dr, "\text{onto}"'] & & \left\{\begin{matrix}\text{realization of topological}\\ \text{resolution towers}\end{matrix}\right\} \\ & \left\{\begin{matrix}\text{realization of algebraic}\\ \text{resolution towers}\end{matrix}\right\} \arrow[ur, "\rho"'] & \end{tikzcd}$$

where ρ is the forgetful map, and τ is the composition. We will denote the set of realization of topological resolution towers by $\mathscr{R}$. To characterize algebraic sets topologically, we need to show that ρ maps onto $\mathscr{R}$. Presently to prove this we need each V_i to be diffeomorphic to a nonsingular algebraic set with totally algebraic homology (see §2). We believe that these restrictions should not be necessary.

Once surjectivity of τ is proven, then it would be useful to find the combinatorial conditions which characterize elements of $\mathscr{R}$ (i.e. algebraic sets). For spaces of dimension $\leqq 2$ the only condition is that the space has to be an

Euler space (Theorem 6.1). In dimension 3 this is not sufficient. For example if X^3 is the suspension $\Sigma(Y^2)$ of Y^2 where

$Y^2 =$ 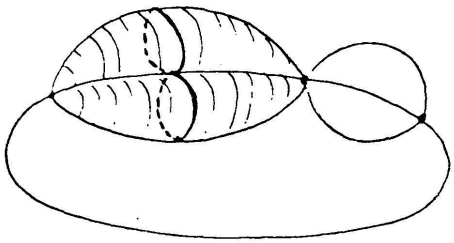 $= \Sigma$ (figure 8) $\cup\ \Sigma$ (three points) $\cup$ an arc

then X^3 is an Euler space but it can not be in $\mathscr{R}$; in particular X^3 can not be homeomorphic to an algebraic set (also see [K_2] for a discussion of this).

In general we start with a Thom stratified space X, by refining the stratification we can assume that each stratum has a trivial normal bundle. Then by proceeding as in [Su_2] we can find obstructions $\alpha_k \in H^k(X(k); \Gamma_{n-k-1})$ to X being an algebraic set with this stratification, where $X(k)$ is the k-th stratum of X, $n = \dim(X)$ and Γ_i is the cobordism group of i-dimensional elements of $\mathscr{R}$. For example we can show $\Gamma_0 = \Gamma_1 \cong \mathbf{Z}/2\mathbf{Z}$ and $\Gamma_2 \cong (\mathbf{Z}/2\mathbf{Z})^{16}$. It would be useful to compute the cobordism groups Γ_* for $* \geqq 3$ or reduce the computation to a certain homotopy group of a universal space (as in the smooth cobordism group). A more precise discussion of this section will appear in [AK_9].

REFERENCES

[A] AKBULUT, S. Algebraic equations for a class of P.L. spaces. *Math. Ann. 231* (1977), 19-31.

[AK_1] AKBULUT, S. and H. KING. Real algebraic variety structures on P.L. manifolds. *Bull. A.M.S. 83* (1977), 281-282.

[AK_2] —— The topology of real algebraic sets with isolated singularities. *Ann. of Math. 113* (1981), 425-446.

[AK_3] —— A relative Nash theorem. *Trans. A.M.S. Vol. 267, No. 2* (1981), 465-481.

[AK_4] —— All knots are algebraic. *Comm. Math. Hev. Vol. 56 (3)* (1981), 339-351.

[AK_5] —— A topological characterization of real algebraic varieties. *Bull. A.M.S. (New series), Vol. 2, No. 1* (1980), 171-173.

[AK_6] —— Real algebraic structures on topological spaces. *Publ. I.H.E.S., No. 53*, (1981), 79-162.

[AK_7] —— *Lectures on topology of real algebraic varieties.* I.A.S. (1980-1981), lecture notes.

[AK_8] —— On submanifolds and homology of nonsingular real algebraic varieties. (To appear).

[AK_9] —— Topology of real algebraic sets. (In prep.).

[AT_1] AKBULUT, S. and L. TAYLOR. A topological resolution theorem. *Bull. A.M.S. (New series) Vol. 2, No. 1* (1980), 174-176.

[AT_2] —— A topological resolution theorem. *Publ. I.H.E.S. No. 53* (1981), 163-195.

[BT_1] BENEDETTI, R. and A. TOGNOLI. On real algebraic vector bundles. *Bull. des. sci. math. 2e série, 104* (1980), 89-112.

[BT_2] —— Approximation theorems in real algebraic geometry. (Preprint).

[H] HIRONAKA, H. Resolution of singularities of an algebraic variety over a field of characteristic zero. *Ann. of Math. 79* (1964), 109-326.

[K_1] KING, H. Approximating submanifolds of real projective space by varieties. *Topology 15* (1976), 81-85.

[K_2] —— The topology of real algebraic sets. (To appear in: *proceedings of Arcata Conf. on Singularities).*

[Ku] KUIPER, N. Algebraic equations for nonsmoothable 8-manifolds. *Publ. I.H.E.S. 33* (1968), 139-155.

[L] LEVITT, N. Exotic singular structures on Spheres. *Trans. A.M.S. 205* (1975), 371-388.

[Lo] LOJASIEWICZ, S. Triangulation of semianalytic sets. *Ann. Sc. Norm. Sup. Pisa 18* (1964), 449-474.

[M] MILNOR, J. *Singular points of complex hypersurfaces.* Ann. of Math. study 61, Princeton, 1968.

[Mu] MUMFORD, D. *Algebraic geometry I, Complex projective varieties.* Grund. der math. Wiss. 221, Springer-Verlag (1976).

[N] NASH, J. Real algebraic manifolds. *Ann. of Math. 56* (1952), 405-421.

[S] SEIFERT, H. Algebraische approximation von mannigfaltigkeiten. *Math. Zeitschrift 41* (1936), 1-17.

[Sp] SPANIER, E. *Algebraic topology.* McGraw-Hill, 1966.

[Su_1] SULLIVAN, D. Combinatorial invariants of analytic spaces. *Proc. of Liverpool singularities I, Lecture notes, Vol. 192*, Springer-Verlag (1971), 165-168.

[Su_2] —— Singularities in spaces. *Proc. of Liverpool singularities II, Lecture notes, Vol. 209*, Springer-Verlag (1971), 196-206.

[T] THOM, R. Quelques propriétés globales de variétés différentiables. *Comm. Math. Helv. 28* (1954), 17-86.

[To] TOGNOLI, A. Su una congettura di Nash. *Annali Sc. Norm. Sup. Pisa 27* (1973), 167-185.

[W] WALL, C. T. C. Classification problems in differential topology, IV. Thickenings. *Topology 5* (1966), 73-94.

(Reçu le 22 octobre 1982)

Selman Akbulut

Max-Planck Inst. für Mathematik
Gottfried-Clarenstrasse 26
5300-Bonn 3
BRD

and

Department of Mathematics
Michigan State University
East Lansing, Michigan 48824
USA

Henry King

Department of Mathematics
University of Maryland
College Park
Maryland 20742
USA