**Zeitschrift:** Helvetica Physica Acta

**Band:** 72 (1999)

**Heft:** 5-6

**Artikel:** Approximate Rydberg states of the hydrogen atom that are concentrated near Kepler orbits

**Autor:** Hagedorn, George H. / Robinson, Sam L.

**DOI:** https://doi.org/10.5169/seals-117183

**Nutzungsbedingungen**

Die ETH-Bibliothek ist die Anbieterin der digitalisierten Zeitschriften auf E-Periodica. Sie besitzt keine Urheberrechte an den Zeitschriften und ist nicht verantwortlich für deren Inhalte. Die Rechte liegen in der Regel bei den Herausgebern beziehungsweise den externen Rechteinhabern. Das Veröffentlichen von Bildern in Print- und Online-Publikationen sowie auf Social Media-Kanälen oder Webseiten ist nur mit vorheriger Genehmigung der Rechteinhaber erlaubt. Mehr erfahren

**Conditions d'utilisation**

L'ETH Library est le fournisseur des revues numérisées. Elle ne détient aucun droit d'auteur sur les revues et n'est pas responsable de leur contenu. En règle générale, les droits sont détenus par les éditeurs ou les détenteurs de droits externes. La reproduction d'images dans des publications imprimées ou en ligne ainsi que sur des canaux de médias sociaux ou des sites web n'est autorisée qu'avec l'accord préalable des détenteurs des droits. En savoir plus

**Terms of use**

The ETH Library is the provider of the digitised journals. It does not own any copyrights to the journals and is not responsible for their content. The rights usually lie with the publishers or the external rights holders. Publishing images in print and online publications, as well as on social media channels or websites, is only permitted with the prior consent of the rights holders. Find out more

**Download PDF:** 02.12.2025

**ETH-Bibliothek Zürich, E-Periodica, https://www.e-periodica.ch**

Helv. Phys. Acta 72 (1999) 316 - 340
0018-0238/99/050316-25 $ 1.50+0.20/0
© Birkhäuser Verlag, Basel, 1999

Helvetica Physica Acta

# Approximate Rydberg States of the Hydrogen Atom that are Concentrated near Kepler Orbits

George A. Hagedorn*
Department of Mathematics and
Center for Statistical Mechanics and Mathematical Physics
Virginia Polytechnic Institute and State University
Blacksburg, Virginia 24061-0123

Sam L. Robinson
Department of Mathematics and Computer Science
Augusta State University, 2500 Walton Way
Augusta, Georgia 30904–2200, U. S. A.

**Abstract**

We study the semiclassical limit for bound states of the Hydrogen atom Hamiltonian

$$H(\hbar) = -\frac{\hbar^2}{2}\Delta - \frac{1}{|x|}.$$

For each Kepler orbit of the corresponding classical system, we construct a lowest order quasimode $\Psi(\hbar, x)$ for $H(\hbar)$ when the appropriate Bohr-Sommerfeld conditions are satisfied. This means that $\Psi(\hbar, x)$ is an approximate solution of the Schrödinger equation in the sense that

$$\| [H(\hbar) - E(\hbar)] \, \Psi(\hbar, \cdot) \| \leq C \, \hbar^{3/2} \, \|\Psi(\hbar, \cdot)\| \, .$$

The probability density $|\Psi(\hbar, x)|^2$ is concentrated near the Kepler ellipse in position space, and its Fourier transform has probability density $|\widehat{\Psi}(\hbar, \xi)|^2$ concentrated near the Kepler circle in momentum space. Although the existence of such states has been demonstrated previously, the ideas that underlie our time-dependent construction are intuitive and elementary.

*Partially Supported by National Science Foundation Grant DMS–9703751.

# 1 Introduction

In this paper we construct approximate bound state wave functions $\Psi(\hbar, x)$ for the hydrogen atom that are concentrated near Kepler orbits. Our construction can be carried out for any orbit whose classical energy $E$, period $\tau(E)$, and action integral $S(t)$ satisfy the Bohr–Sommerfeld condition

$$I(E) \equiv E\,\tau(E) + S(\tau(E)) = 2\pi\hbar n, \tag{1.1}$$

for some positive integer $n$. The wave function $\Psi(\hbar, x)$ is an approximate eigenstate of the Hamiltonian

$$H(\hbar) = -\frac{\hbar^2}{2}\Delta - \frac{1}{|x|}$$

in the semiclassical limit $\hbar \to 0$, in the sense that it is a "quasimode" of quantum mechanical energy

$$E(\hbar) = E + \frac{2\pi\hbar}{\tau(E)}.$$

This means that it satisfies

$$\|\Psi(\hbar, \cdot)\| = 1 + O(\hbar^{1/2}),$$

and that there exists a constant $C$, such that

$$\|\,[H(\hbar) - E(\hbar)]\;\Psi(\hbar, \cdot)\,\| \le C\,\hbar^{3/2}\;\|\Psi(\hbar, \cdot)\|\,.$$

The projection of the Kepler orbit from phase space to position space is an ellipse, while the projection to momentum space is a circle. The probability density $|\Psi(\hbar, x)|^2$ is concentrated near the ellipse in position space, and its Fourier transform has probability density $|\widehat{\Psi}(\hbar, \xi)|^2$ concentrated near the circle in momentum space.

Our main results are described precisely in Theorem 3.1, but the underlying idea of our approach is the following: We construct our quasimodes by the basic formula

$$\Psi(\hbar, x) = C\,(\pi\hbar)^{-1/4} \int_0^{\tau(E)} e^{itE(\hbar)/\hbar}\, e^{iS(t)/\hbar}\, \varphi_0(A(t), B(t), \hbar, a(t), \eta(t), x)\, dt. \tag{1.2}$$

The quantities $a(t)$, $\eta(t)$, and $S(t)$ are the classical position, momentum, and action integral of the Kepler orbit, respectively. The quantities $A(t)$ and $B(t)$ are periodic with period $\tau(E)$ and are obtained by solving a system of differential equations that arise from the semiclassical mechanics for a new Hamiltonian that is a function of $H(p, x) = \dfrac{p^2}{2} - \dfrac{1}{|x|}$. The wave packet

$$e^{iS(t)/\hbar}\varphi_0(A(t), B(t), \hbar, a(t), \eta(t), x) \tag{1.3}$$

is a normalized complex Gaussian wave packet that is an approximate solution to a time-dependent Schrödinger equation that we define below. It is localized near position $a(t)$, and its Fourier transform is localized near momentum $\eta(t)$. The integrand in (1.2) is periodic

with period $\tau(E)$ for any bound orbit, except possibly for its phase. The Bohr-Sommerfeld quantization conditions coincide with the requirement that the phase also have period $\tau(E)$.

In an earlier paper [1], we used the same basic idea to construct quasimodes for one-dimensional Schrödinger operators. Khaut-Duy also developed this technique in his unpublished doctoral thesis [2]. In general, the technique fails for systems with more than one degree of freedom. However, if a system only has periodic orbits in some energy range, and if the periods of those orbits depend only on the energy, then the technique can be applied. These conditions are satisfied for the Coulomb potential [3].

There is a vast literature concerning the hydrogen atom, and other authors have constructed wave functions that are concentrated near classical orbits. These wave functions are superpositions of highly excited bound states of the hydrogen atom, and are frequently called "Rydberg states" in the literature. We do not attempt to review the literature here, but simply cite some closely related papers. Thomas and Villegas–Blas [4] present a careful mathematical analysis of the Rydberg states and prove numerous properties from a beautiful geometric point of view. The geometry arises from the well-known $SO(4)$ symmetry of the hydrogen atom [5]. Gay, Delande, and Bommier [6] also have a construction based on this symmetry. Nauenberg [7] uses a construction that minimizes uncertainty products of various physical quantities. Klauder [8] discusses a "coherent state expansion" for the projection onto all the hydrogenic bound states, that is based on the Rydberg states.

The advantage of our time integration technique is that it relates the approximate bound state directly to the classical dynamics along the orbit. The Bohr–Sommerfeld conditions arise naturally as a matching of phases as the particle goes around the orbit. We regard this as much more physically intuitive than the mathematical group theoretic constructions cited above.

The paper is organized as follows. In Section 2 we construct Gaussian wave packets and semiclassical mechanics for a certain operator $f_E(H(\hbar))$. In Section 3 we construct quasimodes for this operator using our basic formula (1.2) and show that the construction also yields quasimodes for the hydrogen Hamiltonian $H(\hbar)$. Some arguments in the proofs in Section 3 are presented with relatively few details because the underlying ideas are very similar to those in our previous paper [1].

We conclude this section with some graphs that were generated by numerical integration of (1.2). We note that even after a particular Kepler orbit has been chosen, one has the freedom to choose $A(0)$ and $B(0)$ arbitrarily. Different choices produce somewhat different results, and the errors appear to be very sensitive to the choices. We also note that we have ignored the direction perpendicular to the plane of the orbit in our plots. With our techniques and choices of $A(0)$ and $B(0)$, the wave function is trivial in that direction.

Figures 1 and 2 plot $|\Psi(\hbar, x)|^2$ and $|\widehat{\Psi}(\hbar, \xi)|^2$ using our quasimode that corresponds to the circular orbit with initial conditions $a(0) = \begin{pmatrix} 1 \\ 0 \\ 0 \end{pmatrix}$ and $\eta(0) = \begin{pmatrix} 0 \\ 1 \\ 0 \end{pmatrix}$. Formulas (2.22) and (2.23) specify our choice of $A(0)$ and $B(0)$. The value of $n$ in (1.1) is 16, and the corresponding value of $\hbar$ is 0.09375.

Figures 3 and 4 plot the same quantities for an elliptical orbit. The initial data are the same as for figures 1 and 2, except that the initial momentum has been changed to $\eta(0) = \begin{pmatrix} 0 \\ 0.9 \\ 0 \end{pmatrix}$. The value of $n$ in (1.1) is again 16, and the corresponding value of $\hbar$ is 0.10364....

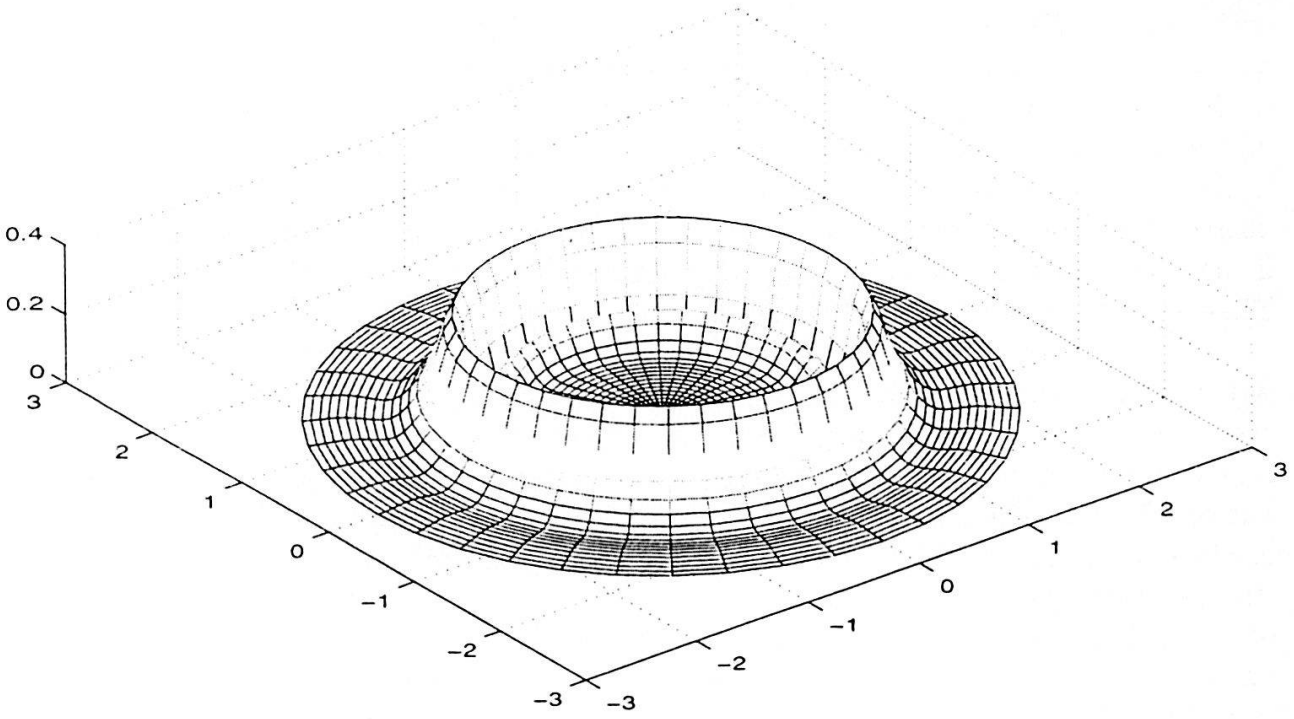


Figure 1: Probability density in position space of a quasimode for a circular orbit.

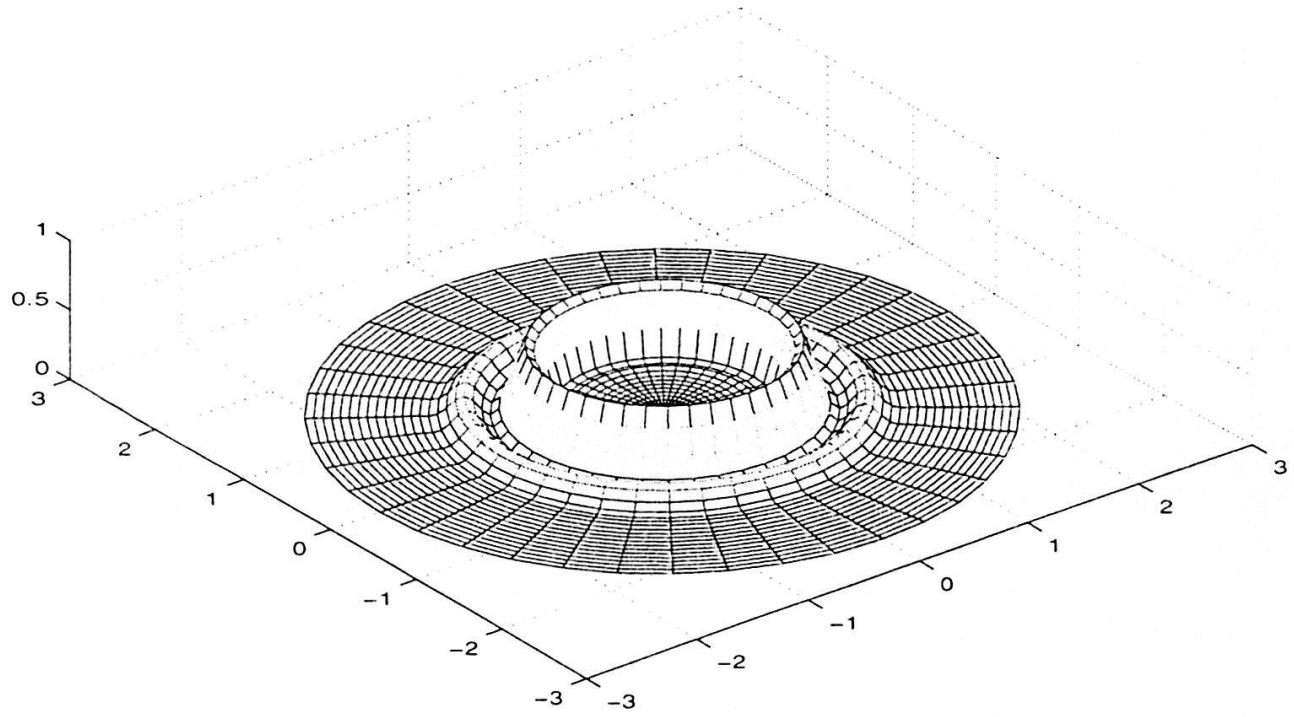


Figure 2: Probability density in momentum space for the same quasimode as Figure 1.

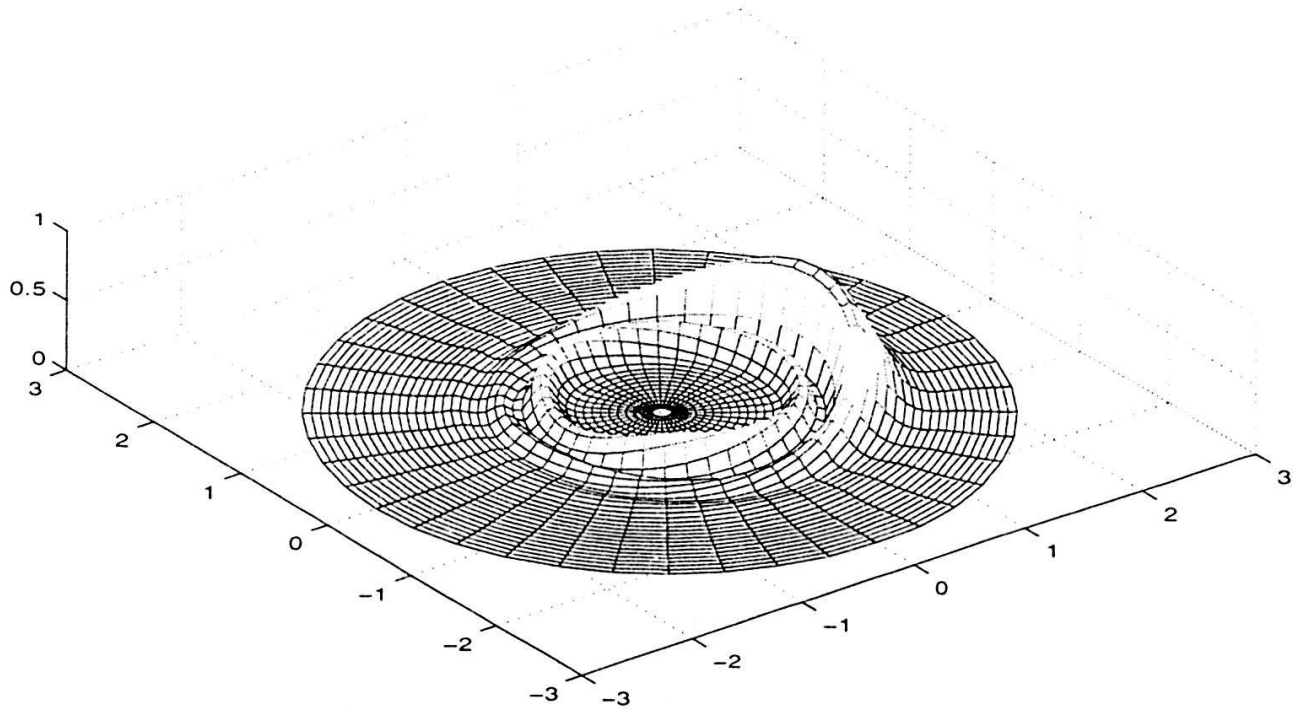


Figure 3: Probability density in position space of a quasimode for an elliptical orbit.

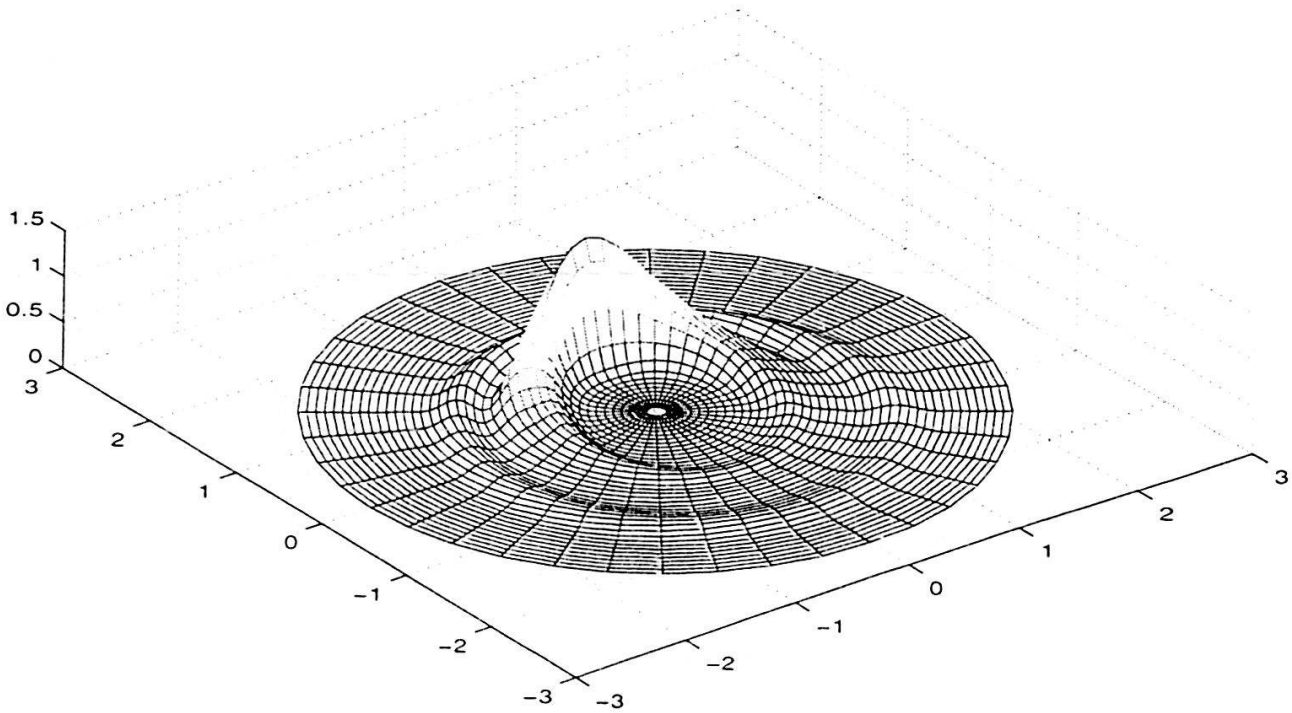


Figure 4: Probability density in momentum space for the same quasimode as Figure 3.

## 2 Semiclassical mechanics for $f_E(H(\hbar))$

To construct our quasimodes, we first construct approximate solutions of the form (1.3) to the Schrödinger equation

$$i\hbar \frac{\partial \psi}{\partial t}(x,t) = f_E(H(\hbar))\,\psi(x,t) \tag{2.1}$$

where

$$f_E(H(\hbar)) = H(\hbar) + \alpha\,(H(\hbar) - E)^2$$

with

$$H(\hbar) = H_0(\hbar) + V(x) = -\frac{\hbar^2}{2}\Delta - \frac{1}{|x|}.$$

The main result of this section is that we can construct an approximate solution of (2.1) that is periodic modulo a phase and completely determined by classical mechanics. Without the replacement of $H(\hbar)$ by $f_E(H(\hbar))$, we would not be able to obtain the desired periodicity because of spreading of the wave packet in the direction of propagation.

The construction relies on the following definition.

**Definition 2.1** *Given $a, \eta \in \mathbb{R}^3$, $\hbar > 0$, and $3 \times 3$ complex matrices $A$ and $B$ that satisfy*

$$A^t B - B^t A = 0, \tag{2.2}$$

$$A^* B + B^* A = 2I, \tag{2.3}$$

*we define*

$$\varphi_0(A, B, \hbar, a, \eta, x) = (\pi\hbar)^{-3/4}\,[\det A]^{-1/2} \times \exp\left\{-\frac{1}{2\hbar}\left\langle (x-a), BA^{-1}(x-a)\right\rangle + \frac{i}{\hbar}\left\langle \eta, (x-a)\right\rangle\right\}. \tag{2.4}$$

**Remark 2.2** *Whenever we write $\varphi_0(A, B, \hbar, a, \eta, x)$ we assume conditions (2.2)-(2.3)are satisfied. The choice of the branch of the square root of $[\det A]^{-1}$ depends on the context and will be specified. The wave packet $\varphi_0(A, B, \hbar, a, \eta, x)$ is normalized, concentrated near position $a$, and its Fourier transform*

$$\begin{aligned}\widehat{\varphi}_0(A, B, \hbar, a, \eta, \xi) &= (2\pi\hbar)^{-3/2}\int_{\mathbb{R}^3} \varphi_0(A, B, \hbar, a, \eta, x)\, e^{-i\langle \xi, x\rangle/\hbar}\,dx \\ &= e^{-i\langle \eta, a\rangle/\hbar}\,\varphi_0(B, A, \hbar, \eta, -a, \xi)\end{aligned}$$

*is concentrated near momentum $\eta$ (see [9]).*

The following proposition states the main result of this section.

**Proposition 2.3** *Suppose $a_0, \eta_0 \in \mathbb{R}^3$ satisfy $|a_0 \times \eta_0| \neq 0$ and $\frac{1}{2}|\eta_0|^2 + V(a_0) = E_0 < 0$. Let $A_0$ and $B_0$ be two complex $3 \times 3$ matrices that satisfy (2.2)-(2.3), and let $a(t)$, $\eta(t)$, $A(t)$, and $B(t)$ denote the solution of the system of ordinary differential equations*

$$\dot{a}(t) = \eta(t), \tag{2.5}$$

$$\dot{\eta}(t) = -\nabla V(a(t)), \tag{2.6}$$

$$\dot{A}(t) = i\,B(t) + 2\,\alpha\,\eta(t)\,(\langle \nabla V(a(t))|\,A(t) + i\,\langle \eta(t)|\,B(t)), \tag{2.7}$$

$$\dot{B}(t) = i\,\mathrm{Hess}\,[V(a(t))]\,A(t) + 2\,\alpha\,i\,\nabla V(a(t))\,(\langle \nabla V(a(t))|\,A(t) + i\,\langle \eta(t)|\,B(t)), \tag{2.8}$$

*with initial conditions $a(0) = a_0$, $\eta(0) = \eta_0$, $A(0) = A_0$, $B(0) = B_0$. Let $S(t)$ denote the classical action*

$$S(t) = \int_0^t \left( \frac{1}{2}|\eta(t)|^2 - V(a(t)) \right) dt.$$

*We choose a particular $\varepsilon > 0$ and a cutoff function $R_\varepsilon \in C^\infty(\mathbb{R}^3)$ that satisfies*

$$R_\varepsilon(x) = \begin{cases} 0, & |x| \leq \frac{\varepsilon}{2} \\ 1, & |x| \geq \varepsilon \end{cases}.$$

*We then define*

$$\Phi(\hbar, x, t) = e^{iS(t)/\hbar}\,R_\varepsilon(x)\,\varphi_0(A(t), B(t), \hbar, a(t), \eta(t), x),$$

*with $\varphi_0$ defined by (2.4) and the branch of the square root determined by continuity in $t$. This wave function satisfies*

$$\left\| \left[ i\,\hbar\,\frac{\partial}{\partial t} - f_{E_0}(H(\hbar)) \right] \Phi(\hbar, \cdot, t) \right\| = O(\hbar^{3/2}) \tag{2.9}$$

*and*

$$\| e^{-i f_{E_0}(H(\hbar))t/\hbar}\,\Phi(\hbar, \cdot, 0) - \Phi(\hbar, \cdot, t) \| = O(\hbar^{1/2}), \tag{2.10}$$

*uniformly for $t$ in any compact interval. Moreover, $a(\cdot)$ and $\eta(\cdot)$ are periodic with period $\tau = \tau(E_0)$ that depends only on $E_0$, and if we choose $\alpha = \dfrac{\tau'(E_0)}{2\tau(E_0)}$, then*

$$\Phi(\hbar, x, t + \tau) = e^{iS(\tau)/\hbar}\,\Phi(\hbar, x, t). \tag{2.11}$$

**Remark 2.4** *We insert the cutoff function $R_\varepsilon$ to avoid the singularity in $V$ at the origin. We choose the parameter $\varepsilon$ to be less than the radius of closest approach of $a(t)$ to the origin (i.e., $\varepsilon < \min_{0 \leq t \leq \tau} |a(t)|$). By examining the proof of the proposition, we see that $R_\varepsilon$ is ignorable in the sense that*

$$\| e^{iS(t)/\hbar}\,\varphi_0(A(t), B(t), \hbar, a(t), \eta(t), \cdot) - \Phi(\hbar, \cdot, t) \| = O(\hbar^k)$$

*for arbitrarily large $k$.*

**Remark 2.5** *It is easy to see that the complex vector quantity*

$$\theta \equiv A(t)^* \nabla V(a(t)) - i\, B(t)^* \eta(t)$$

*is conserved by the motion determined by (2.5)-(2.8). Thus, equations (2.7) and (2.8) can be rewritten in the simpler form*

$$\begin{aligned} \dot{A}(t) &= i\, B(t) + 2\,\alpha\, \eta(t)\, \theta^*, \\ \dot{B}(t) &= i\, \mathrm{Hess}\,[V(a(t))]\, A(t) + 2\,\alpha\, i\, \nabla V(a(t))\, \theta^*. \end{aligned}$$

*One can also show that $A(t)^t B(t) - B(t)^t A(t)$ and $A(t)^* B(t) + B(t)^* A(t)$ are conserved. Thus, (2.2)-(2.3) hold for $t \geq 0$.*

The remainder of this section is devoted to the proof of Proposition 2.3. Our strategy is first to show (2.9) by brute force calculation. The presence of the cutoff function $R_\varepsilon$ complicates the calculation. Once (2.9) is established, we easily obtain estimate (2.10) by invoking a known result (Lemma 3.3 of [10]) that we restate as Lemma 2.8. We obtain (2.11) by studying the underlying classical mechanics in some detail.

## 2.1 The proof of Proposition 2.3

Under the hypotheses of the proposition, the existence and uniqueness of the solution of (2.5)-(2.8) follow by standard ODE arguments. As is well-known (see, *e.g.*, [11] and [3]), the trajectories $a(t)$ and $\eta(t)$ are periodic with period

$$\tau = \tau(E_0) = \frac{\pi}{\sqrt{2}\, |E_0|^{3/2}},$$

and there exists $r_{\min} > 0$ such that $|a(t)| \geq r_{\min}$ for all $t > 0$. We arbitrarily choose $\varepsilon \in (0, r_{\min}/2)$ and introduce a $C^\infty$ cutoff function $R_\varepsilon(x)$ that satisfies

$$R_\varepsilon(x) = \begin{cases} 0, & \text{if } |x| \leq \frac{\varepsilon}{2} \\ 1, & \text{if } |x| \geq \varepsilon \end{cases}.$$

The first step in the proof of (2.9) is to estimate the error we make if we replace $V(x)$ by its second order Taylor expansion about $x = a(t)$. We define

$$V_a(x) = V(a) + \langle \nabla V(a), (x-a) \rangle + \frac{1}{2} \langle (x-a), \mathrm{Hess}[V(a)]\,(x-a) \rangle,$$

and let $H_a(\hbar) = H_0(\hbar) + V_a$. Then,

$$\begin{aligned} \| [f_{E_0}(H(\hbar)) - f_{E_0}(H_a(\hbar))]\, \Phi(\hbar, \cdot, t) \| \leq\ & |1 - 2\alpha E_0|\, \|(V - V_a)\, \Phi(\hbar, \cdot, t)\| \\ & + |\alpha|\, \|(V + V_a)\,(V - V_a)\, \Phi(\hbar, \cdot, t)\| \\ & + |\alpha|\, \|(V - V_a)\, H_0(\hbar)\, \Phi(\hbar, \cdot, t)\| \\ & + |\alpha|\, \|H_0(\hbar)\, [(V - V_a)\, \Phi(\hbar, \cdot, t)]\, \|. \end{aligned} \tag{2.12}$$

We now show that each of the four terms on the right side of this inequality is of order $O(\hbar^{3/2})$. The intuition is that $\Phi$ is concentrated in a ball around $x = a$ where we can bound $V - V_a$ and its derivatives by polynomials in $(x-a)$. Away from $x = a$, $\Phi$ decays rapidly, and the cutoff function $R_\varepsilon$ effectively removes the singularity. This allows us to bound $V - V_a$ and its derivatives by polynomials. We estimate some of the resulting norms by using the following fact, that is easily established by explicit calculation or a scaling argument:

**Lemma 2.6** *If $F(\hbar, x)$ satisfies $|F(\hbar, x)| \leq C\hbar^k(x-a)^\mu$, for some constants $C$, $k$, and multi-index $\mu$, then*

$$\| F(\hbar, \cdot)\, \varphi_0(A, B, \hbar, a, \eta, \cdot) \| = O(\hbar^{k+|\mu|/2}).$$

*This estimate is uniform whenever $a$, $\eta$, $A$, and $B$ are restricted to compact sets on which (2.2)-(2.3) are satisfied.*

We also encounter norms that are of order $O(\hbar^k)$ for arbitrarily large $k$. We use the notation $O(\hbar^\infty)$ to denote this behavior. We say that a quantity is uniformly $O(\hbar^\infty)$ as some parameters are varied in some set, if for each $k$, there exists $C_k$, such that the quantity is bounded by $C_k\, \hbar^k$ as the parameters are varied.

**Lemma 2.7** *Suppose $F(\hbar, x)$ satisfies $| F(\hbar, x) | \leq C\, \hbar^k\, (x-a)^\mu\, e^{M|x|^2}$, for some constants $C$, $k$, $M$, and multi-index $\mu$. Let $\varepsilon > 0$ be given and let $\widetilde{\chi}$ denote the characteristic function of $\{ x : |x-a| \geq \varepsilon \}$. Then*

$$\| F(\hbar, \cdot)\, \widetilde{\chi}\, \varphi_0(A, B, \hbar, a, \eta, \cdot)\| = O(\hbar^\infty).$$

*This estimate is uniform whenever $a$, $\eta$, $A$, and $B$ are restricted to compact sets on which (2.2)-(2.3) are satisfied.*

**Proof.** Conditions (2.2)-(2.3) imply that $\mathrm{Re}\,(BA^{-1}) = (AA^*)^{-1}$. Hence

$$\mathrm{Re}\,\left\langle (x-a),\, BA^{-1}(x-a)\right\rangle = \left|A^{-1}(x-a)\right|^2 \geq \frac{1}{\|A\|^2}\, |x-a|^2 .$$

and

$$\begin{aligned} \| F(\hbar, \cdot)\, \widetilde{\chi}\, \varphi_0(A, B, \hbar, a, \eta, \cdot) \| \;\leq\; & \left\| F(\hbar, \cdot)\, \widetilde{\chi}\, \exp\left\{ -\frac{1}{4\hbar}\, \|A\|^{-2}\, |x-a|^2 \right\} \right\|_\infty \\ & \times \left\| \exp\left\{ \frac{1}{4\hbar}\, \|A\|^{-2}\, |x-a|^2 \right\} \varphi_0(A, B, \hbar, a, \eta, \cdot) \right\| . \end{aligned}$$

For sufficiently small $\hbar$, the first factor falls off faster than any power of $\hbar$. The second factor is bounded by a constant, independent of $\hbar$. The lemma follows. ∎

We note that we may freely replace $R_\varepsilon\, \varphi_0$ by $\varphi_0$ when estimating some of these norms. For $j = 1, 2, 3$, and $m = 0, 1, \ldots$, and $a \neq 0$, we have

$$\left\| \frac{\partial^m}{\partial x_j^m}\, \left[ (1 - R_\varepsilon)\, \varphi_0(A, B, \hbar, a, \eta, \cdot) \right] \right\|$$

$$
\begin{aligned}
&= \left\| \sum_{k=0}^{m} \binom{m}{k} \left( \frac{\partial^k}{\partial x_j^k} (1 - R_\varepsilon) \right) \frac{\partial^{m-k}}{\partial x_j^{m-k}} \left[ \varphi_0(A, B, \hbar, a, \eta, \cdot) \right] \right\| \\
&\leq \sum_{k=0}^{m} \binom{m}{k} \left\| \frac{\partial^k}{\partial x_j^k} (1 - R_\varepsilon) \right\|_\infty \left( \int_{|x| \leq \varepsilon} \left| \frac{\partial^{m-k}}{\partial x_j^{m-k}} \left[ \varphi_0(A, B, \hbar, a, \eta, x) \right] \right|^2 dx \right)^{1/2} \\
&= O(\hbar^\infty). \qquad (2.13)
\end{aligned}
$$

since $\frac{\partial^{m-k}}{\partial x_j^{m-k}} [\varphi_0(A, B, \hbar, a, \eta, x)]$ is just a product of $\varphi_0(A, B, \hbar, a, \eta, x)$ and a polynomial in the components of $(x - a)$ with coefficients involving finite powers of $\hbar$.

We now consider each of the four terms on the right side of (2.12) separately and in order. Let $\chi_a(x)$ denote the characteristic function of $\{x : |x - a| < \varepsilon\}$ and $\widetilde{\chi}_a(x) = 1 - \chi_a(x)$. On $\{x : |x - a| < \varepsilon\}$, we have

$$
|V(x) - V_a(x)| \leq c_1 |x - a|^3 ,
$$

for some constant $c_1$, and on $\{x : |x - a| \geq \varepsilon\}$, we have

$$
|V(x) - V_a(x)| \, R_\varepsilon(x) \leq \frac{1}{\varepsilon} + |V_a(x)| .
$$

Hence,

$$
\begin{aligned}
\|(V - V_a)\Phi(\hbar, \cdot, t)\| &\leq \|\chi_a (V - V_a) \Phi(\hbar, \cdot, t)\| + \|\widetilde{\chi}_a (V - V_a) \Phi(\hbar, \cdot, t)\| \\
&\leq c_1 \left\| |x - a|^3 \Phi(\hbar, \cdot, t) \right\| + \left\| \widetilde{\chi}_a (\frac{1}{\varepsilon} + |V_a|) \varphi_0(A, B, \hbar, a, \eta, \cdot) \right\| \\
&= O(\hbar^{3/2}) + O(\hbar^\infty) \\
&= O(\hbar^{3/2}).
\end{aligned}
$$

A similar argument handles the second term. Since $|V + V_a|$ is bounded by some constant $c_2$ on $\{x : |x - a| < \varepsilon\}$,

$$
\begin{aligned}
\|(V + V_a)(V - V_a) \Phi(\hbar, \cdot, t)\| &\leq c_2 \|\chi_a (V - V_a) \Phi(\hbar, \cdot, t)\| + \left\| \widetilde{\chi}_a (V^2 - V_a^2) \Phi(\hbar, \cdot, t) \right\| \\
&\leq c_1 c_2 \left\| |x - a|^3 \Phi(\hbar, \cdot, t) \right\| \\
&\quad + \left\| \widetilde{\chi}_a (\frac{1}{\varepsilon^2} + |V_a|^2) \varphi_0(A, B, \hbar, a, \eta, \cdot) \right\| \\
&= O(\hbar^{3/2}) + O(\hbar^\infty) \\
&= O(\hbar^{3/2}).
\end{aligned}
$$

For the third term we use (2.13) to replace $R_\varepsilon \varphi_0$ by $\varphi_0$. We then use the explicit

calculation

$$\begin{aligned} H_0(\hbar)\,\varphi_0(A,B,\hbar,a,\eta,x) &= \left(\frac{1}{2}\,|\eta|^2 - \frac{\hbar}{2}\,\mathrm{tr}(BA^{-1}) + i\,\langle \eta,\, BA^{-1}(x-a)\rangle \right. \\ &\qquad \left. - \frac{1}{2}\left\langle (x-a),\, \left(BA^{-1}\right)^2 (x-a)\right\rangle\right)\varphi_0(A,B,\hbar,a,\eta,x) \\ &\equiv P(x)\,\varphi_0(A,B,\hbar,a,\eta,x). \end{aligned}$$

to obtain

$$\begin{aligned} \|\,(V-V_a)\,H_0(\hbar)\,\Phi(\hbar,\cdot,t)\| &= \|\,(V-V_a)\,H_0(\hbar)\,\varphi_0(A,B,\hbar,a,\eta,\cdot)\,\| + O(\hbar^\infty) \\ &= \|\,(V-V_a)\,P\,\varphi_0(A,B,\hbar,a,\eta,\cdot)\,\| + O(\hbar^\infty) \\ &= \|\,(V-V_a)\,P\,\Phi(\hbar,\cdot,t)\,\| + O(\hbar^\infty). \end{aligned}$$

We complete the estimate by showing

$$\|\,(V-V_a)\,P\,\Phi(\hbar,\cdot,t)\,\| = O(\hbar^{3/2}),$$

using the same ideas as in the case of the first two terms.

For the last term in (2.12) we expand

$$H_0(\hbar)\,[(V-V_a)\,\Phi] = -\frac{\hbar^2}{2}\left(\Phi\,\Delta(V-V_a) + 2\,\langle\nabla(V-V_a),\,\nabla\Phi\rangle + (V-V_a)\,\Delta\Phi\right)$$

and replace $R_\varepsilon\,\varphi_0$ by $\varphi_0$ to compute the derivatives of $\Phi$. We then re-insert the factor of $R_\varepsilon$, and proceed as above, using the bounds

$$|\nabla(V(x)-V_a(x))| \le c_3\,|x-a|^2$$

and

$$|\Delta(V(x)-V_a(x))| \le c_4\,|x-a|$$

on $\{x : |x-a| < \varepsilon\}$. This shows that

$$\|\,H_0(\hbar)\,[(V-V_a)\,\Phi(\hbar,\cdot,t)]\,\| = O(\hbar^{3/2}),$$

and we then conclude the desired bound

$$\|\,[f_{E_0}(H(\hbar)) - f_{E_0}(H_a(\hbar))]\,\Phi(\hbar,\cdot,t)\,\| = O(\hbar^{3/2}). \tag{2.14}$$

This completes the first step of the proof.

The next step is to show that

$$\left\|\left[i\,\hbar\frac{\partial}{\partial t} - f_{E_0}(H_a(\hbar))\right]\Phi(\hbar,\cdot,t)\right\| = O(\hbar^{3/2}). \tag{2.15}$$

To prove this, we explicitly calculate the quantity inside the norm. Because of equations (2.5)–(2.8), several terms cancel. We estimate the remaining terms by using Lemma 2.6 (the singularity in $V$ no longer affects the calculations).

The estimate (2.9) follows immediately from equations (2.14) and (2.15). Equation (2.10) follows by applying the following lemma, which is Lemma 3.3 of [10].

**Lemma 2.8** *Let $H(\hbar)$ be a family of self-adjoint operators for $\hbar > 0$. Suppose $\psi(\hbar, x, t)$ is continuously differentiable in $t$ and belongs to the domain of $H(\hbar)$ for $\hbar > 0$. Suppose further that $\psi(\hbar, x, t)$ satisfies*

$$\left\| \left[ i\hbar \frac{\partial}{\partial t} - H(\hbar) \right] \psi(\hbar, \cdot, t) \right\| = O(\hbar^{\lambda}),$$

*for $t \in [0, T]$. Then*

$$\| e^{-itH(\hbar)/\hbar} \psi(\hbar, \cdot, 0) - \psi(\hbar, \cdot, t) \| = O(\hbar^{\lambda - 1}),$$

*for $t \in [0, T]$.*

To complete the proof of Proposition 2.3, we need only establish (2.11). It suffices to show that, if $\alpha = \dfrac{\tau'(E_0)}{2\tau(E_0)}$, then $A(t)$, $B(t)$, and $\det[A(t)]^{-1/2}$ are periodic with period $\tau$. To prove the periodicity of $A$ and $B$ we first note that

$$A(t) = \frac{\partial a}{\partial a_0} A_0 + i \frac{\partial a}{\partial \eta_0} B_0, \tag{2.16}$$

$$B(t) = \frac{\partial \eta}{\partial \eta_0} B_0 - i \frac{\partial \eta}{\partial a_0} A_0 \tag{2.17}$$

(see, *e.g.*, [9]), and then argue that the matrices of partial derivatives $\dfrac{\partial a}{\partial a_0}$, $\dfrac{\partial a}{\partial \eta_0}$, $\dfrac{\partial \eta}{\partial \eta_0}$, and $\dfrac{\partial \eta}{\partial a_0}$ have period $\tau$.

To achieve this goal, we first consider the dynamics arising from the (classical) Hamiltonian

$$f_E(H(a, \eta)) = H(a, \eta) + \alpha (H(a, \eta) - E)^2,$$

where

$$H(a, \eta) = \frac{1}{2} |\eta|^2 + V(a),$$

and $\alpha$ and $E$ are arbitrary constants. The corresponding Hamiltonian system

$$\frac{\partial a}{\partial t} = (1 + 2\alpha (H(a, \eta) - E))\, \eta, \tag{2.18}$$

$$\frac{\partial \eta}{\partial t} = -(1 + 2\alpha (H(a, \eta) - E))\, \nabla V(a) \tag{2.19}$$

conserves the quantity $H(a, \eta) = H(a_0, \eta_0)$. Thus, differentiating (2.18)-(2.19) with respect to the initial conditions $a_0$ and $\eta_0$, we obtain

$$\frac{\partial}{\partial t} \begin{pmatrix} \frac{\partial a}{\partial a_0} & \frac{\partial a}{\partial \eta_0} \\ \frac{\partial \eta}{\partial a_0} & \frac{\partial \eta}{\partial \eta_0} \end{pmatrix} = (1 + 2\alpha (H - E)) \begin{pmatrix} 0 & I \\ -\mathrm{Hess}[V(a)] & 0 \end{pmatrix} \begin{pmatrix} \frac{\partial a}{\partial a_0} & \frac{\partial a}{\partial \eta_0} \\ \frac{\partial \eta}{\partial a_0} & \frac{\partial \eta}{\partial \eta_0} \end{pmatrix}$$

$$+ 2\alpha \begin{pmatrix} |\eta\rangle\langle \nabla V(a_0)| & |\eta\rangle\langle \eta_0| \\ -|\nabla V(a)\rangle\langle \nabla V(a_0)| & -|\nabla V(a)\rangle\langle \eta_0| \end{pmatrix}.$$

where we have introduced a Dirac bra-ket notation in an effort to reduce confusion.

If we no longer allow $E$ to be arbitrary, but instead impose the value $E = E_0 = H(a_0, \eta_0)$, we obtain the nonhomogeneous system

$$\frac{\partial}{\partial t}\begin{pmatrix} \frac{\partial a}{\partial a_0} & \frac{\partial a}{\partial \eta_0} \\ \frac{\partial \eta}{\partial a_0} & \frac{\partial \eta}{\partial \eta_0} \end{pmatrix} = \begin{pmatrix} 0 & I \\ -\operatorname{Hess}[V(a)] & 0 \end{pmatrix}\begin{pmatrix} \frac{\partial a}{\partial a_0} & \frac{\partial a}{\partial \eta_0} \\ \frac{\partial \eta}{\partial a_0} & \frac{\partial \eta}{\partial \eta_0} \end{pmatrix}$$
$$+ 2\alpha \begin{pmatrix} |\eta\rangle\langle\nabla V(a_0)| & |\eta\rangle\langle\eta_0| \\ -|\nabla V(a)\rangle\langle\nabla V(a_0)| & -|\nabla V(a)\rangle\langle\eta_0| \end{pmatrix}. \tag{2.20}$$

This has a solution

$$\begin{pmatrix} \frac{\partial a}{\partial a_0} & \frac{\partial a}{\partial \eta_0} \\ \frac{\partial \eta}{\partial a_0} & \frac{\partial \eta}{\partial \eta_0} \end{pmatrix} = U(t) + 2\alpha t \begin{pmatrix} |\eta\rangle\langle\nabla V(a_0)| & |\eta\rangle\langle\eta_0| \\ -|\nabla V(a)\rangle\langle\nabla V(a_0)| & -|\nabla V(a)\rangle\langle\eta_0| \end{pmatrix}, \tag{2.21}$$

where $U(t)$ is the solution of the homogeneous system

$$\frac{\partial}{\partial t} U(t) = \begin{pmatrix} 0 & I \\ -\operatorname{Hess}[V(a)] & 0 \end{pmatrix} U(t),$$

with

$$U(0) = I.$$

The matrix $U(t)$ can be realized explicitly as

$$U(t) = \begin{pmatrix} \frac{\partial \tilde{a}}{\partial a_0} & \frac{\partial \tilde{a}}{\partial \eta_0} \\ \frac{\partial \tilde{\eta}}{\partial \eta_0} & \frac{\partial \tilde{\eta}}{\partial a_0} \end{pmatrix},$$

where $(\tilde{a}, \tilde{\eta}) = (\tilde{a}(a_0, \eta_0, t), \tilde{\eta}(a_0, \eta_0, t))$ is the solution of the unperturbed ($\alpha = 0$) Hamiltonian system

$$\begin{aligned} \frac{\partial \tilde{a}}{\partial t} &= \tilde{\eta} \\ \frac{\partial \tilde{\eta}}{\partial t} &= -\nabla V(\tilde{a}). \end{aligned}$$

We note that for $E = E_0$, $(\tilde{a}(a_0, \eta_0, t), \tilde{\eta}(a_0, \eta_0, t)) = (a(a_0, \eta_0, t), \eta(a_0, \eta_0, t))$, although the unperturbed and the original flows differ in the behavior of the derivatives with respect to the initial conditions. Differentiating both sides of

$$(\tilde{a}(a_0, \eta_0, t + \tau), \tilde{\eta}(a_0, \eta_0, t + \tau)) = (\tilde{a}(a_0, \eta_0, t), \tilde{\eta}(a_0, \eta_0, t))$$

with respect to the initial conditions gives

$$U(t + \tau(E_0)) = U(t) + \tau'(E_0) \begin{pmatrix} -|\eta(t)\rangle\langle\nabla V(a_0)| & -|\eta(t)\rangle\langle\eta_0| \\ |\nabla V(a(t))\rangle\langle\nabla V(a_0)| & |\nabla V(a(t))\rangle\langle\eta_0| \end{pmatrix}.$$

Thus, using (2.21), we obtain

$$\begin{pmatrix} \frac{\partial a}{\partial a_0}(t+\tau) & \frac{\partial a}{\partial \eta_0}(t+\tau) \\ \frac{\partial \eta}{\partial a_0}(t+\tau) & \frac{\partial \eta}{\partial \eta_0}(t+\tau) \end{pmatrix} = \begin{pmatrix} \frac{\partial a}{\partial a_0}(t) & \frac{\partial a}{\partial \eta_0}(t) \\ \frac{\partial \eta}{\partial a_0}(t) & \frac{\partial \eta}{\partial \eta_0}(t) \end{pmatrix}$$

$$+ (\tau'(E_0) - 2\alpha\tau(E_0)) \begin{pmatrix} -|\eta(t)\rangle\langle\nabla V(a_0)| & -|\eta(t)\rangle\langle\eta_0| \\ |\nabla V(a(t))\rangle\langle\nabla V(a_0)| & |\nabla V(a(t))\rangle\langle\eta_0| \end{pmatrix}.$$

So, if we choose $\alpha = \dfrac{\tau'(E_0)}{2\tau(E_0)}$, then $\dfrac{\partial a}{\partial a_0}$, $\dfrac{\partial a}{\partial \eta_0}$, $\dfrac{\partial \eta}{\partial \eta_0}$, and $\dfrac{\partial \eta}{\partial a_0}$ are periodic with period $\tau(E_0)$. The periodicity of $A$ and $B$ follows from (2.20), (2.7), (2.8), (2.16), (2.17), and uniqueness.

The final stroke is to prove the periodicity of $\det[A(t)]^{1/2}$ if $\alpha = \dfrac{\tau'(E_0)}{2\tau(E_0)}$. Since $A$ is periodic, it suffices to show that the trajectory $\{\det[A(t)], 0 \le t \le \tau\}$ in $\mathbb{C}$ has winding number equal to 2.

To prove this, we note that solutions to differential equations with smooth coefficients depend smoothly on initial conditions and parameters in the equations [12]. It follows that the winding number is a continuous integer-valued function of the initial conditions. Thus, it must be constant. For the special case $a_0 = (1, 0, 0)$, $\eta_0 = (0, 1, 0)$,

$$A_0 = \begin{pmatrix} 1 & -2i & 0 \\ 2i & -1 & 0 \\ 0 & 0 & 1 \end{pmatrix}. \tag{2.22}$$

and

$$B_0 = \begin{pmatrix} -1 & -i & 0 \\ i & 1 & 0 \\ 0 & 0 & 1 \end{pmatrix}. \tag{2.23}$$

we can explicitly solve (2.5)–(2.8). We obtain $\tau = 2\pi$, $\alpha = 3/2$, and $\det[A(t)] = 5e^{2it}$. For this special choice (and hence, all) initial conditions, the winding number is equal to 2. ∎

# 3 Quasimodes for $f_E(H(\hbar))$ and $H(\hbar)$

In this section we first construct a lowest order quasimode for the Hamiltonian $f_E(H(\hbar))$ and then show that the result is a quasimode for the Hamiltonian $H(\hbar)$.

**Theorem 3.1** *Let the hypotheses of Proposition 2.3 be satisfied, and choose* $\alpha = \dfrac{\tau'(E_0)}{2\tau(E_0)}$. *Suppose* $\hbar$ *and* $E_0$ *satisfy the Bohr-Sommerfeld condition*

$$E_0\,\tau(E_0) + S(\tau(E_0)) = 2\pi\hbar n, \text{ for some } n \in \mathbb{Z}^+. \tag{3.1}$$

*Let*

$$\theta = A_0^*\,\nabla V(a_0) - i\,B_0^*\,\eta_0.$$

*and define*

$$\Psi(\hbar, x) = (\pi\hbar)^{-1/4} \sqrt{\frac{|\theta|}{2\tau(E_0)}} \times \int_0^{\tau(E_0)} e^{it(E_0+\frac{2\pi\hbar}{\tau(E_0)})/\hbar} e^{iS(t)/\hbar} R_\varepsilon(x)\, \varphi_0(A(t), B(t), \hbar, a(t), \eta(t), x)\, dt.$$

*Then,*

$$\| \Psi(\hbar, \cdot) \| = 1 + O(\hbar^{1/2}) \tag{3.2}$$

*and*

$$\left\| \left[ H(\hbar) - \left( E_0 + \frac{2\pi\hbar}{\tau(E_0)} \right) \right] \Psi(\hbar, \cdot) \right\| = O(\hbar^{3/2}). \tag{3.3}$$

We prove this theorem below. The proof is analogous to the corresponding one, presented in [1], for one-dimensional quantum systems, but the details are more complicated.

## 3.1 The proof of Theorem 3.1

To establish (3.2) we first note that we can remove the cutoff function $R_\varepsilon$ from the integrand, because if

$$\widetilde{\Psi}(\hbar, x) = (\pi\hbar)^{-1/4} \sqrt{\frac{|\theta|}{2\tau(E_0)}} \int_0^{\tau(E_0)} e^{it(E_0+\frac{2\pi\hbar}{\tau(E_0)})/\hbar} e^{iS(t)/\hbar} \varphi_0(A(t), B(t), \hbar, a(t), \eta(t), x)\, dt$$

then

$$\begin{aligned} \left\| \Psi(\hbar, \cdot) - \widetilde{\Psi}(\hbar, \cdot) \right\| &\leq (\pi\hbar)^{-1/4} \sqrt{\frac{|\theta|}{2\tau(E_0)}} \\ &\quad \times \int_0^{\tau(E_0)} \| (R_\varepsilon - 1)\, \varphi_0(A(t), B(t), \hbar, a(t), \eta(t), \cdot) \|\, dt \\ &= O(\hbar^\infty). \end{aligned}$$

After removing the cutoff, we simply mimic Section 2.3 of [1] to prove estimate (3.2). The argument is based on two crucial lemmas. The first, Lemma 3.2, is Proposition 4 of [1], so we simply state it here without proof. The second, Lemma 3.3, is a multi-dimensional analog of Proposition 3 of [1].

**Lemma 3.2** *Suppose $f(t, s)$ is a complex $C^2$ function and $g(t, s)$ is a complex $C^3$ function, for $t \in [0, T]$ and $s \in [-T/2, T/2]$. Suppose there exists $\delta > 0$, such that* $\mathrm{Re}\,(g(t, s)) \geq \delta s^2$.

*for* $t \in [0, T]$ *and* $s \in [-T/2, T/2]$. *Assume further that* $g(t, 0) = 0$; $\frac{\partial g}{\partial s}(t, 0) = 0$; *and* $\frac{\partial^2 g}{\partial s^2}(t, 0) = \alpha(t)$ *is real and positive. Then for any non-negative integer* $n$, *we have*

$$\int_0^T dt \int_{-T/2}^{T/2} ds\, f(t, s)\, s^{2n}\, e^{-g(t,s)/\hbar} = 1 \cdot 3 \cdots |2n-1|\, \sqrt{2\pi}\, \hbar^{n+1/2} \times \int_0^T f(t, 0)\, \alpha(t)^{-n-1/2}\, dt + O(\hbar^{n+1}).$$

**Lemma 3.3** *Suppose* $a_1, \eta_1, a_2, \eta_2 \in \mathbb{R}^n$, $\hbar > 0$, *and that* $A_1, B_1$ *and* $A_2, B_2$ *are two pairs of* $n \times n$ *complex matrices with each pair satisfying conditions (2.2)-(2.3). Then*

$$\begin{aligned}
&\langle \varphi_0(A_1, B_1, \hbar, a_1, \eta_1, \cdot), \varphi_0(A_2, B_2, \hbar, a_2, \eta_2, \cdot)\rangle \\
= \; & 2^{n/2} (\det(\overline{A_1}))^{-1/2} (\det(A_2))^{-1/2} (\det(\overline{B_1}\,\overline{A_1}^{-1} + B_2 A_2^{-1}))^{-1/2} \\
& \times \exp\Big\{ -\Big\langle (a_1 - a_2), \overline{B_1}\,\overline{A_1}^{-1} (\overline{B_1}\,\overline{A_1}^{-1} + B_2 A_2^{-1})^{-1} B_2 A_2^{-1} (a_1 - a_2)\Big\rangle / 2\hbar \\
& - \Big\langle (\eta_1 - \eta_2), (\overline{B_1}\,\overline{A_1}^{-1} + B_2 A_2^{-1})^{-1} (\eta_1 - \eta_2)\Big\rangle / 2\hbar \\
& - i \Big\langle (\eta_1 - \eta_2), (\overline{B_1}\,\overline{A_1}^{-1} + B_2 A_2^{-1})^{-1} (\overline{B_1}\,\overline{A_1}^{-1} - B_2 A_2^{-1})(a_1 - a_2)\Big\rangle / 2\hbar \\
& - i \langle (\eta_1 + \eta_2), (a_2 - a_1)\rangle / 2\hbar \Big\}.
\end{aligned}$$

**Proof.** We prove this lemma by explicit calculation. We write the inner product as an integral and complete the square in the exponent of the integrand. We simplify the resulting expression by using some matrix identities and then compute the integral by changing variables.

We write

$$\begin{aligned}
&\langle \varphi_0(A_1, B_1, \hbar, a_1, \eta_1, \cdot), \varphi_0(A_2, B_2, \hbar, a_2, \eta_2, \cdot)\rangle \\
= \; & (\pi\hbar)^{-n/2} (\det(\overline{A_1}))^{-1/2} (\det(A_2))^{-1/2} \int_{\mathbb{R}^n} \exp\{-\Phi(x)/2\hbar\}\, dx. \qquad (3.4)
\end{aligned}$$

where

$$\begin{aligned}
\Phi(x) &= \Big\langle (x - a_1), \overline{B_1}\,\overline{A_1}^{-1} (x - a_1)\Big\rangle + \langle (x - a_2), B_2 A_2^{-1} (x - a_2)\rangle \\
&\quad + 2i \langle \eta_1, (x - a_1)\rangle - 2i \langle \eta_2, (x - a_2)\rangle \\
&= x^t (\overline{B_1}\,\overline{A_1}^{-1} + B_2 A_2^{-1}) x - 2\Big(\overline{B_1}\,\overline{A_1}^{-1} a_1 + B_2 A_2^{-1} a_2 + i(\eta_2 - \eta_1)\Big)^t x \\
&\quad + \Big\langle a_1, \overline{B_1}\,\overline{A_1}^{-1} a_1\Big\rangle + \langle a_2, B_2 A_2^{-1} a_2\rangle + 2i \langle \eta_2, a_2\rangle - 2i \langle \eta_1, a_1\rangle. \qquad (3.5)
\end{aligned}$$

To complete the square in this expression, we use the formula

$$x^t T x - 2i\xi^t x = \left(x - iT^{-1}\xi\right)^t T \left(x - iT^{-1}\xi\right) + \xi^t T^{-1}\xi,$$

that holds for complex matrices $T$ that satisfy $T^t = T$ and complex column vectors $x$ and $\xi$. Specifically, we choose $x$ to be the independent variable,

$$\xi = -i\,(\overline{B_1}\,\overline{A_1}^{-1} a_1 + B_2 A_2^{-1} a_2) + (\eta_2 - \eta_1), \tag{3.6}$$

and $T = (\overline{B_1}\,\overline{A_1}^{-1} + B_2 A_2^{-1})$. We can thus write (3.5) as

$$\begin{aligned}\Phi(x) &= \left(x - iT^{-1}\xi\right)^t T \left(x - iT^{-1}\xi\right) + \xi^t T^{-1}\xi \\ &\quad + \left\langle a_1, \overline{B_1}\,\overline{A_1}^{-1} a_1\right\rangle + \langle a_2, B_2 A_2^{-1} a_2\rangle + 2i\,\langle \eta_2, a_2\rangle - 2i\,\langle \eta_1, a_1\rangle .\end{aligned} \tag{3.7}$$

By a gruesome calculation that we perform below, this can be rewritten as

$$\begin{aligned}\Phi(x) &= y^t\,(\overline{B_1}\,\overline{A_1}^{-1} + B_2 A_2^{-1})\,y \\ &\quad + \left\langle (a_1 - a_2), \overline{B_1}\,\overline{A_1}^{-1}(\overline{B_1}\,\overline{A_1}^{-1} + B_2 A_2^{-1})^{-1} B_2 A_2^{-1}(a_1 - a_2)\right\rangle \\ &\quad + \left\langle (\eta_1 - \eta_2), (\overline{B_1}\,\overline{A_1}^{-1} + B_2 A_2^{-1})^{-1}(\eta_1 - \eta_2)\right\rangle \\ &\quad + i\left\langle (\eta_1 - \eta_2), (\overline{B_1}\,\overline{A_1}^{-1} + B_2 A_2^{-1})^{-1}(\overline{B_1}\,\overline{A_1}^{-1} - B_2 A_2^{-1})(a_1 - a_2)\right\rangle \\ &\quad + i\,\langle (\eta_1 + \eta_2), (a_2 - a_1)\rangle ,\end{aligned} \tag{3.8}$$

where $y = \left(x - \left(\overline{B_1}\,\overline{A_1}^{-1} + B_2 A_2^{-1}\right)^{-1}\left[\overline{B_1}\,\overline{A_1}^{-1} a_1 + B_2 A_2^{-1} a_2 + i(\eta_2 - \eta_1)\right]\right)$. Using (3.8), we change variables from $x$ to $y$ in the integral in (3.4). After we extract all the $y$-independent factors, the integral is a standard Gaussian integral that can be computed using well-known techniques (see *e.g.*, [13]). This proves the conclusion of the lemma.

It remains to be shown that (3.7) can be transformed into (3.8). This follows if we show

$$\begin{aligned}&\xi^t T^{-1}\xi + \left\langle a_1, \overline{B_1}\,\overline{A_1}^{-1} a_1\right\rangle + \langle a_2, B_2 A_2^{-1} a_2\rangle + 2i\,\langle \eta_2, a_2\rangle - 2i\,\langle \eta_1, a_1\rangle \\ &= \left\langle (a_1 - a_2), \overline{B_1}\,\overline{A_1}^{-1}(\overline{B_1}\,\overline{A_1}^{-1} + B_2 A_2^{-1})^{-1} B_2 A_2^{-1}(a_1 - a_2)\right\rangle \\ &\quad + \left\langle (\eta_1 - \eta_2), (\overline{B_1}\,\overline{A_1}^{-1} + B_2 A_2^{-1})^{-1}(\eta_1 - \eta_2)\right\rangle \\ &\quad + i\left\langle (\eta_1 - \eta_2), (\overline{B_1}\,\overline{A_1}^{-1} + B_2 A_2^{-1})^{-1}(\overline{B_1}\,\overline{A_1}^{-1} - B_2 A_2^{-1})(a_1 - a_2)\right\rangle \\ &\quad + i\,\langle (\eta_1 + \eta_2), (a_2 - a_1)\rangle .\end{aligned} \tag{3.9}$$

To facilitate the proof of this identity, we make use of two matrix identities

$$T_1\,(T_1 + T_2)^{-1}\,T_2 = T_2\,(T_1 + T_2)^{-1}\,T_1. \tag{3.10}$$

and

$$(T_1 + T_2)^{-1} T_1 = I - (T_1 + T_2)^{-1} T_2. \tag{3.11}$$

We apply these identities with $T_1 = \overline{B_1}\,\overline{A_1}^{-1}$ and $T_2 = B_2 A_2^{-1}$ or their conjugates.

Using (3.6), we expand the left-hand side of (3.9) as

$$\begin{aligned}
&- \left(\overline{B_1}\,\overline{A_1}^{-1} a_1\right)^t T^{-1} \left(\overline{B_1}\,\overline{A_1}^{-1} a_1\right) - \left(\overline{B_1}\,\overline{A_1}^{-1} a_1\right)^t T^{-1} \left(B_2 A_2^{-1} a_2\right) \\
&- \left(B_2 A_2^{-1} a_2\right)^t T^{-1} \left(\overline{B_1}\,\overline{A_1}^{-1} a_1\right) - \left(B_2 A_2^{-1} a_2\right)^t T^{-1} \left(B_2 A_2^{-1} a_2\right) \\
&+ (\eta_2 - \eta_1)^t T^{-1} (\eta_2 - \eta_1) \\
&- i \left(\overline{B_1}\,\overline{A_1}^{-1} a_1\right)^t T^{-1} (\eta_2 - \eta_1) - i \left(B_2 A_2^{-1} a_2\right)^t T^{-1} (\eta_2 - \eta_1) \\
&- i (\eta_2 - \eta_1)^t T^{-1} \left(\overline{B_1}\,\overline{A_1}^{-1} a_1\right) - i (\eta_2 - \eta_1)^t T^{-1} \left(B_2 A_2^{-1} a_2\right) \\
&+ a_1^t \left(\overline{B_1}\,\overline{A_1}^{-1} a_1\right) + a_2^t \left(B_2 A_2^{-1} a_2\right) + 2 i \eta_2^t a_2 - 2 i \eta_1^t a_1.
\end{aligned} \tag{3.12}$$

We must show that this expression equals the right-hand side of (3.9). To do so, we separately study terms that contain no $a$'s, those that contain both $a$'s and $\eta$'s, and those that contain no $\eta$'s.

It is obvious that the terms that contain no $a$'s in the two expressions are equal.

Using (3.11), we can write the terms containing $a$'s and $\eta$'s on the right-hand side of (3.9) as

$$\begin{aligned}
&- i \left\langle (\eta_2 - \eta_1), T^{-1} \left(\overline{B_1}\,\overline{A_1}^{-1} a_1\right)\right\rangle - i \left\langle (\eta_2 - \eta_1), T^{-1} \left(B_2 A_2^{-1} a_2\right)\right\rangle \\
&- i \left\langle (\eta_2 - \eta_1), \left(I - T^{-1} B_2 A_2^{-1}\right) a_1\right\rangle - i \left\langle (\eta_2 - \eta_1), \left(I - T^{-1} \overline{B_1}\,\overline{A_1}^{-1}\right) a_2\right\rangle \\
&+ 2 i \langle \eta_2, a_2\rangle - 2 i \langle \eta_1, a_1\rangle \\
= \; & - i \left\langle (\eta_2 - \eta_1), T^{-1} \left(\overline{B_1}\,\overline{A_1}^{-1}\right) (a_1 - a_2)\right\rangle - i \left\langle (\eta_2 - \eta_1), T^{-1} \left(B_2 A_2^{-1}\right) (a_2 - a_1)\right\rangle \\
& - i \langle (\eta_2 - \eta_1), (a_1 + a_2)\rangle + 2 i \langle \eta_2, a_2\rangle - 2 i \langle \eta_1, a_1\rangle \\
= \; & - i \left\langle (\eta_2 - \eta_1), T^{-1} \left(\overline{B_1}\,\overline{A_1}^{-1} - B_2 A_2^{-1}\right) (a_1 - a_2)\right\rangle - i \langle (\eta_1 + \eta_2), (a_1 - a_2)\rangle .
\end{aligned}$$

This agrees with the terms of (3.12) that contain both $a$'s and $\eta$'s.

The terms of (3.12) that contain no $\eta$'s are

$$
\begin{aligned}
& - \left(\overline{B_1}\,\overline{A_1}^{-1}a_1\right)^t T^{-1}\left(\overline{B_1}\,\overline{A_1}^{-1}a_1\right) - \left(\overline{B_1}\,\overline{A_1}^{-1}a_1\right)^t T^{-1}\left(B_2A_2^{-1}a_2\right) \\
& - \left(B_2A_2^{-1}a_2\right)^t T^{-1}\left(\overline{B_1}\,\overline{A_1}^{-1}a_1\right) - \left(B_2A_2^{-1}a_2\right)^t T^{-1}\left(B_2A_2^{-1}a_2\right) \\
& + a_1^t\left(\overline{B_1}\,\overline{A_1}^{-1}a_1\right) + a_2^t\left(B_2A_2^{-1}a_2\right) \\
= & - \left(\overline{B_1}\,\overline{A_1}^{-1}a_1\right)^t T^{-1}\left(\overline{B_1}\,\overline{A_1}^{-1}a_1\right) - \left(\overline{B_1}\,\overline{A_1}^{-1}a_1\right)^t T^{-1}B_2A_2^{-1}a_2 \\
& - \left(B_2A_2^{-1}a_2\right)^t T^{-1}\left(\overline{B_1}\,\overline{A_1}^{-1}a_1\right) - \left(B_2A_2^{-1}a_2\right)^t T^{-1}\left(B_2A_2^{-1}a_2\right) \\
& + \left(\overline{B_1}\,\overline{A_1}^{-1}a_1\right)^t T^{-1}\left(\overline{B_1}\,\overline{A_1}^{-1}a_1\right) + \left(\overline{B_1}\,\overline{A_1}^{-1}a_1\right)^t T^{-1}B_2A_2^{-1}a_1 \\
& + \left(B_2A_2^{-1}a_2\right)^t T^{-1}\overline{B_1}\,\overline{A_1}^{-1}a_2 + \left(B_2A_2^{-1}a_2\right)^t T^{-1}B_2A_2^{-1}a_1 \\
= & \left(\overline{B_1}\,\overline{A_1}^{-1}a_1\right)^t T^{-1}B_2A_2^{-1}(a_1-a_2) + \left(B_2A_2^{-1}a_2\right)^t T^{-1}\overline{B_1}\,\overline{A_1}^{-1}(a_2-a_1).
\end{aligned}
$$

We use (3.10) in the final term in this expression to obtain

$$
\left\langle (a_1-a_2),\ \overline{B_1}\,\overline{A_1}^{-1}T^{-1}B_2A_2^{-1}(a_1-a_2)\right\rangle .
$$

This agrees with the terms on the right-hand side of (3.9) that contain no $\eta$'s.

This establishes (3.9), and the proof is complete. ∎

Following the outline of [1], we prove (3.3) by establishing the preliminary estimate

$$
\left\| \left[ f_{E_0}(H(\hbar)) - \left(E_0 + \frac{2\pi\hbar}{\tau(E_0)}\right)\right] \Psi(\hbar,\cdot) \right\| = O(\hbar^{3/2}) \tag{3.13}
$$

and then using the spectral mapping arguments of Lemma 3.7.

Without doing any further work, we can easily prove weaker versions of (3.13) and (3.3) that have the $O(\hbar^{3/2})$ replaced by $O(\hbar^{5/4})$. To do so, we define $\Phi(\hbar,x,t)$ as in Lemma 2.3 and then observe that

$$
\begin{aligned}
& \left[ f_{E_0}(H(\hbar)) - \left(E_0 + \frac{2\pi\hbar}{\tau(E_0)}\right)\right] \Psi(\hbar,x) \\
= & (\pi\hbar)^{-1/4}\sqrt{\frac{|\theta|}{2\tau(E_0)}}\int_0^{\tau(E_0)}\left(f(H(\hbar)) - E_0 - \frac{2\pi\hbar}{\tau(E_0)}\right)\left(e^{it(E_0+\frac{2\pi\hbar}{\tau(E_0)})/\hbar}\Phi(\hbar,x,t)\right)dt \\
= & \ C\hbar^{3/4}\int_0^{\tau(E_0)}\frac{\partial}{\partial t}\left(e^{it(E_0+\frac{2\pi\hbar}{\tau(E_0)})/\hbar}\,e^{iS(t)/\hbar}\,\Phi(\hbar,x,t)\right)dt + O(\hbar^{5/4}) \\
= & \ C\hbar^{3/4}\left(e^{i(\tau E_0+S(\tau))/\hbar}-1\right)\Phi(\hbar,x,0) + O(\hbar^{5/4}) \\
= & \ O(\hbar^{5/4})
\end{aligned} \tag{3.14}
$$

if $\hbar$ and $E_0$ satisfy the Bohr-Sommerfeld condition (3.1). This proves the weak version of (3.13). The weak version of (3.3) follows by use of the spectral mapping arguments of Lemma 3.7.

To improve the power of $\hbar$ on the right side of (3.14) from 5/4 to 3/2, we mimic the argument used in [1]. The basic idea is to improve the time-dependent semiclassical approximation we have used by an approximation that is one order higher in $\hbar^{1/2}$. We do this precisely as in [1]. This is a straight-forward exercise, except that we need the multi-dimensional analog of Proposition 7 of [1].

The higher order approximation requires us to consider states other than Gaussians. Because these states enter in a purely technical way, we present only minimal information about them here. For a detailed discussion of them, see [14].

For $n \times n$ complex matrices $A$ and $B$ that satisfy (2.2)–(2.3), $\hbar > 0$, and any multi-index $\kappa$, we define

$$\begin{aligned}\varphi_\kappa(A, B, \hbar, a, \eta, x) &= \frac{1}{\sqrt{\kappa!}} \left(\mathcal{A}_1(A, B, \hbar, a, \eta)^*\right)^{\kappa_1} \left(\mathcal{A}_2(A, B, \hbar, a, \eta)^*\right)^{\kappa_2} \cdots \\ &\qquad \times \left(\mathcal{A}_n(A, B, \hbar, a, \eta)^*\right)^{\kappa_n} \varphi_0(A, B, \hbar, a, \eta, x),\end{aligned}$$

where $\mathcal{A}_j(A, B, \hbar, a, \eta)^*$ denotes the $j^{\text{th}}$ raising operator

$$\mathcal{A}_j(A, B, \hbar, a, \eta)^* = \frac{1}{\sqrt{2\hbar}} \left[ \langle e_j, B^*(x-a)\rangle - i \langle e_j, A^*(p-\eta)\rangle \right].$$

The corresponding lowering operator is

$$\mathcal{A}_j(A, B, \hbar, a, \eta) = \frac{1}{\sqrt{2\hbar}} \left[ \langle e_j, B^t(x-a)\rangle + i \langle e_j, A^t(p-\eta)\rangle \right].$$

Here $e_j$ denotes the $j^{\text{th}}$ standard basis vector in $\mathbb{R}^n$ and $p = -i\hbar\nabla$. We use $\mathcal{A}(A, B, \hbar, a, \eta)$ and $\mathcal{A}(A, B, \hbar, a, \eta)^*$ to denote the (vector) operators with components $\mathcal{A}_j(A, B, \hbar, a, \eta)$ and $\mathcal{A}_j(A, B, \hbar, a, \eta)^*$, respectively.

The multi-dimensional analog of Proposition 7 of [1] is the following:

**Lemma 3.4** *Assume the hypotheses of Lemma 3.3, and let $\lambda$ and $\mu$ be any two multi-indices. Let*

$$\Gamma = \left(\overline{(B_1 A_1^{-1})} + (B_2 A_2^{-1})\right)^{-1}$$

*and*

$$\delta = (B_1 A_1^{-1}) - (B_2 A_2^{-1}).$$

*Then,*

$$\begin{aligned}&\langle \varphi_\lambda(A_1, B_1, \hbar, a_1, \eta_1, \cdot), \varphi_\mu(A_2, B_2, \hbar, a_2, \eta_2, \cdot)\rangle \\ &= \Theta(\lambda, \mu) \langle \varphi_0(A_1, B_1, \hbar, a_1, \eta_1, \cdot), \varphi_0(A_2, B_2, \hbar, a_2, \eta_2, \cdot)\rangle.\end{aligned}$$

*where the quantity* $\Theta(\lambda, \mu)$ *is determined recursively by*

$$\begin{aligned}\Theta(\lambda+e_j, \mu) &= \frac{1}{\sqrt{\lambda_j+1}} \sum_{k=1}^{n} \Bigg\{ \sqrt{\lambda_k} \left(\overline{A_1}^{-1} \Gamma \delta A_1\right)_{j,k} \Theta(\lambda-e_k, \mu) \\ &+ 2\sqrt{\mu_k} \left(\overline{A_1}^{-1} \Gamma (A_2^t)^{-1}\right)_{j,k} \Theta(\lambda, \mu-e_k) \\ &+ \sqrt{\frac{2}{\hbar}} \left(\overline{A_1}^{-1} \Gamma\right)_{j,k} \left((B_2 A_2^{-1})(a_2-a_1) + i(\eta_2-\eta_1)\right)_k \Theta(\lambda, \mu) \Bigg\},\end{aligned} \tag{3.15}$$

*or*

$$\begin{aligned}\Theta(\lambda, \mu+e_j) &= -\frac{1}{\sqrt{\mu_j+1}} \sum_{k=1}^{n} \Bigg\{ \sqrt{\mu_k} \left(A_2^{-1} \Gamma^t \overline{\delta}\, \overline{A_2}\right)_{j,k} \Theta(\lambda, \mu-e_k) \\ &- 2\sqrt{\lambda_k} \left(A_2^{-1} \Gamma^t \overline{A_1}^{-1}\right)_{j,k} \Theta(\lambda-e_k, \mu) \\ &+ \sqrt{\frac{2}{\hbar}} \left(A_2^{-1} \Gamma^t\right)_{j,k} \left(\overline{(B_1 A_1^{-1})}(a_2-a_1) - i(\eta_2-\eta_1)\right)_k \Theta(\lambda, \mu) \Bigg\},\end{aligned} \tag{3.16}$$

*and the initial conditions*

$$\Theta(0, 0) = 1, \tag{3.17}$$

$$\begin{aligned}\Theta(\lambda+e_j, 0) &= \frac{1}{\sqrt{\lambda_j+1}} \sum_{k=1}^{n} \Bigg\{ \sqrt{\lambda_k} \left(\overline{A_1}^{-1} \Gamma \delta A_1\right)_{j,k} \Theta(\lambda-e_k, 0) \\ &+ \sqrt{\frac{2}{\hbar}} \left(\overline{A_1}^{-1} \Gamma\right)_{j,k} \left((B_2 A_2^{-1})(a_2-a_1) + i(\eta_2-\eta_1)\right)_k \Theta(\lambda, 0) \Bigg\},\end{aligned} \tag{3.18}$$

$$\begin{aligned}\Theta(0, \mu+e_j) &= -\frac{1}{\sqrt{\mu_j+1}} \sum_{k=1}^{n} \Bigg\{ \sqrt{\mu_k} \left(A_2^{-1} \Gamma^t \overline{\delta}\, \overline{A_2}\right)_{j,k} \Theta(0, \mu-e_k) \\ &+ \sqrt{\frac{2}{\hbar}} \left(A_2^{-1} \Gamma^t\right)_{j,k} \left(\overline{(B_1 A_1^{-1})}(a_2-a_1) - i(\eta_2-\eta_1)\right)_k \Theta(0, \mu) \Bigg\}.\end{aligned} \tag{3.19}$$

**Remark 3.5** *The initial conditions (3.17)-(3.19) and either (3.15) or (3.16) completely determine* $\Theta(\lambda, \mu)$.

**Remark 3.6** *It follows immediately that $\Theta(\lambda, \mu)$ is a polynomial of degree $|\lambda + \mu|$ in the components of*

$$\hbar^{-1/2}\left((B_2A_2^{-1})(a_2 - a_1) + i(\eta_2 - \eta_1)\right)$$

*and*

$$\hbar^{-1/2}\left(\overline{(B_1A_1^{-1})}(a_2 - a_1) - i(\eta_2 - \eta_1)\right).$$

*Furthermore, an induction on $|\lambda+\mu|$ shows that if $|\lambda+\mu|$ is even (odd) then this polynomial contains only even (odd) terms.*

**Proof.** Let

$$\begin{aligned}\varphi_\lambda^{(1)}(x) &= \varphi_\lambda(A_1, B_1, \hbar, a_1, \eta_1, x),\\ \varphi_\mu^{(2)}(x) &= \varphi_\mu(A_2, B_2, \hbar, a_2, \eta_2, x).\end{aligned}$$

We prove equation (3.15) by a calculation that is facilitated by the introduction of vector quantities $\Phi_{\mu^-}^{(2)}$, $\Phi_{\lambda^-}^{(1)}$, and $\Phi_{\lambda^+}^{(1)}$, with

$$\begin{aligned}\left(\Phi_{\mu^-}^{(2)}\right)_k &= \left(\mathcal{A}(A_2, B_2, \hbar, a_2, \eta_2)\,\varphi_\mu^{(2)}\right)_k &&= \sqrt{\mu_k}\,\varphi_{\mu-e_k}^{(2)},\\ \left(\Phi_{\lambda^-}^{(1)}\right)_k &= \left(\mathcal{A}(A_1, B_1, \hbar, a_1, \eta_1)\,\varphi_\lambda^{(1)}\right)_k &&= \sqrt{\lambda_k}\,\varphi_{\lambda-e_k}^{(1)},\\ \left(\Phi_{\lambda^+}^{(1)}\right)_k &= \left(\mathcal{A}(A_1, B_1, \hbar, a_1, \eta_1)^*\,\varphi_\lambda^{(1)}\right)_k &&= \sqrt{\lambda_k + 1}\,\varphi_{\lambda+e_k}^{(1)}.\end{aligned}$$

Then,

$$\left\langle \varphi_{\lambda+e_j}^{(1)}, \varphi_\mu^{(2)}\right\rangle = \frac{1}{\sqrt{\lambda_j + 1}}\left(\left\langle \Phi_{\lambda^+}^{(1)}, \varphi_\mu^{(2)}\right\rangle\right)_j$$

and

$$\begin{aligned}\left\langle \Phi_{\lambda^+}^{(1)}, \varphi_\mu^{(2)}\right\rangle &= \left\langle \mathcal{A}(A_1, B_1, \hbar, a_1, \eta_1)^*\varphi_\lambda^{(1)}, \varphi_\mu^{(2)}\right\rangle\\ &= \left\langle \varphi_\lambda^{(1)}, \mathcal{A}(A_1, B_1, \hbar, a_1, \eta_1)\,\varphi_\mu^{(2)}\right\rangle\\ &= \frac{1}{\sqrt{2\hbar}}\left\langle \varphi_\lambda^{(1)}, \left[B_1^t(x - a_1) + iA_1^t(p - \eta_1)\right]\varphi_\mu^{(2)}\right\rangle\\ &= \frac{1}{\sqrt{2\hbar}}\left[B_1^t\left\langle \varphi_\lambda^{(1)}, (x - a_1)\varphi_\mu^{(2)}\right\rangle + iA_1^t\left\langle \varphi_\lambda^{(1)}, (p - \eta_1)\varphi_\mu^{(2)}\right\rangle\right]\\ &= \frac{1}{\sqrt{2\hbar}}\left[B_1^t\left\langle \varphi_\lambda^{(1)}, x\,\varphi_\mu^{(2)}\right\rangle + iA_1^t\left\langle \varphi_\lambda^{(1)}, p\,\varphi_\mu^{(2)}\right\rangle\right.\\ &\qquad\left. + \left(B_1^t a_1 - iA_1^t\eta_1\right)\left\langle \varphi_\lambda^{(1)}, \varphi_\mu^{(2)}\right\rangle\right].\end{aligned}$$

We rewrite the term containing $\left\langle \varphi_\lambda^{(1)}, p\,\varphi_\mu^{(2)}\right\rangle$ using

$$p\,\varphi_\mu^{(2)} = -i\sqrt{2\hbar}\,(A_2^t)^{-1}\,\Phi_{\mu^-}^{(2)} + i\,B_2A_2^{-1}\,(x - a_2)\,\varphi_\mu^{(2)} + \eta_2\,\varphi_\mu^{(2)},$$

which is the result of solving

$$\mathcal{A}(A_2, B_2, \hbar, a_2, \eta_2)\, \varphi_\mu^{(2)} \;=\; \frac{1}{\sqrt{2\hbar}} \left[B_2^t(x - a_2) + iA_2^t(p - \eta_2)\right] \varphi_\mu^{(2)} \;=\; \Phi_{\mu^-}^{(2)}$$

for $p\, \varphi_\mu^{(2)}$ with the help of $B_2 A_2^{-1} = \left(B_2 A_2^{-1}\right)^t$, which follows from (2.2).

With further use of (2.2), this yields

$$\begin{aligned}
\left\langle \Phi_{\lambda^+}^{(1)}, \varphi_\mu^{(2)} \right\rangle \;&=\; \frac{1}{\sqrt{2\hbar}} A_1^t \Big[\left((A_1^t)^{-1} B_1^t - (A_2^t)^{-1} B_2^t\right) \left\langle \varphi_\lambda^{(1)}, x\, \varphi_\mu^{(2)} \right\rangle \\
&\quad + \sqrt{2\hbar}\, (A_2^t)^{-1} \left\langle \varphi_\lambda^{(1)}, \Phi_{\mu^-}^{(2)} \right\rangle \\
&\quad - \left((A_1^t)^{-1} B_1^t a_1 - (A_2^t)^{-1} B_2^t a_2 + i(\eta_1 - \eta_2)\right) \left\langle \varphi_\lambda^{(1)}, \varphi_\mu^{(2)} \right\rangle\Big] \\
&=\; \frac{1}{\sqrt{2\hbar}} A_1^t \Big[\left((B_1 A_1^{-1}) - (B_2 A_2^{-1})\right) \left\langle \varphi_\lambda^{(1)}, x\, \varphi_\mu^{(2)} \right\rangle \\
&\quad + \sqrt{2\hbar}\, (A_2^t)^{-1} \left\langle \varphi_\lambda^{(1)}, \Phi_{\mu^-}^{(2)} \right\rangle \\
&\quad - \left((B_1 A_1^{-1}) a_1 - (B_2 A_2^{-1}) a_2 + i(\eta_1 - \eta_2)\right) \left\langle \varphi_\lambda^{(1)}, \varphi_\mu^{(2)} \right\rangle\Big].
\end{aligned}$$

In this expression, we use the formula

$$x \;=\; a_1 + \sqrt{\frac{\hbar}{2}}\, \left( A_1 \mathcal{A}(A_1, B_1, \hbar, a_1, \eta_1)^* + \overline{A_1}\, \mathcal{A}(A_1, B_1, \hbar, a_1, \eta_1) \right)$$

to rewrite the factor $\left\langle \varphi_\lambda^{(1)}, x\, \varphi_\mu^{(2)} \right\rangle = \left\langle x\, \varphi_\lambda^{(1)}, \varphi_\mu^{(2)} \right\rangle$ as

$$\left\langle x\, \varphi_\lambda^{(1)}, \varphi_\mu^{(2)} \right\rangle = a_1 \left\langle \varphi_\lambda^{(1)}, \varphi_\mu^{(2)} \right\rangle + \sqrt{\frac{\hbar}{2}} \left( \overline{A_1} \left\langle \Phi_{\lambda^+}^{(1)}, \varphi_\mu^{(2)} \right\rangle + A_1 \left\langle \Phi_{\lambda^-}^{(1)}, \varphi_\mu^{(2)} \right\rangle \right).$$

From this we obtain

$$\begin{aligned}
\left\langle \Phi_{\lambda^+}^{(1)}, \varphi_\mu^{(2)} \right\rangle \;&=\; \frac{1}{2} A_1^t \left((B_1 A_1^{-1}) - (B_2 A_2^{-1})\right) \overline{A_1} \left\langle \Phi_{\lambda^+}^{(1)}, \varphi_\mu^{(2)} \right\rangle \\
&\quad + \frac{1}{2} A_1^t \left((B_1 A_1^{-1}) - (B_2 A_2^{-1})\, A_1 \right\langle \Phi_{\lambda^-}^{(1)}, \varphi_\mu^{(2)} \right\rangle \\
&\quad + \frac{1}{\sqrt{2\hbar}} A_1^t \left((B_2 A_2^{-1})(a_2 - a_1) + i(\eta_2 - \eta_1)\right) \left\langle \varphi_\lambda^{(1)}, \varphi_\mu^{(2)} \right\rangle \\
&\quad + A_1^t\, (A_2^t)^{-1} \left\langle \varphi_\lambda^{(1)}, \Phi_{\mu^-}^{(2)} \right\rangle.
\end{aligned}$$

We solve this equation for $\left\langle \Phi_{\lambda^+}^{(1)}, \varphi_\mu^{(2)} \right\rangle$. We then take the $j^{\text{th}}$ component of the resulting expression to obtain

$$\begin{aligned}
\left\langle \varphi_{\lambda+e_j}^{(1)}, \varphi_\mu^{(2)} \right\rangle \;&=\; \frac{1}{\sqrt{\lambda_j + 1}} \sum_{k=1}^{n} \Big\{ \sqrt{\lambda_k}\, \left(\overline{A_1}^{-1} \Gamma\, \delta\, A_1\right)_{j,k} \left\langle \varphi_{\lambda-e_k}^{(1)}, \varphi_\mu^{(2)} \right\rangle \\
&\quad + 2\, \sqrt{\mu_k}\, \left(\overline{A_1}^{-1} \Gamma\, (A_2^t)^{-1}\right)_{j,k} \left\langle \varphi_\lambda^{(1)}, \varphi_{\mu-e_k}^{(2)} \right\rangle \\
&\quad + \sqrt{\frac{2}{\hbar}}\, \left(\overline{A_1}^{-1} \Gamma\right)_{j,k} \left((B_2 A_2^{-1})(a_2 - a_1) + i(\eta_2 - \eta_1)\right)_k \left\langle \varphi_\lambda^{(1)}, \varphi_\mu^{(2)} \right\rangle \Big\}.
\end{aligned}$$

We obtain equation (3.15) by defining

$$\Theta(\lambda, \mu) = \frac{\left\langle \varphi_\lambda^{(1)}, \varphi_\mu^{(2)} \right\rangle}{\left\langle \varphi_0^{(1)}, \varphi_0^{(2)} \right\rangle}.$$

We obtain equation (3.16) easily by taking conjugates and swapping the indices, since

$$\left\langle \varphi_\lambda^{(1)}, \varphi_{\mu+e_j}^{(2)} \right\rangle = \overline{\left\langle \varphi_{\mu+e_j}^{(2)}, \varphi_\lambda^{(1)} \right\rangle}.$$

The initial conditions (3.17)–(3.19) follow immediately by restricting the expressions above to the appropriate choices of multi-indices. ∎

As noted earlier, Theorem 3.1 is proved by mimicking the arguments of [1], with the help of our multi–dimensional results. The principal idea is to replace the approximate soultion $\Phi$ of Proposition 2.3 by the next higher order approximation in $\hbar^{1/2}$. This replacement adds a correction to our quasimode $\Psi(\hbar, x)$. We prove that the correction can be dropped because it is of higher order. This argument yields the estimates (3.3) and

$$\| (H(\hbar) - E_0)^3 \, \Phi(\hbar, \cdot, t) \| = O(\hbar^{3/2}),$$

uniformly for $t$ in any compact interval. We complete the proof of Theorem 3.1 by applying the following spectral mapping result, which is Proposition 8 of [1]:

**Lemma 3.7** *Suppose $H(\hbar)$ is self-adjoint on a Hilbert space $\mathcal{H}$, and $E \in \mathbb{R}$. Suppose $g(z) = z + \alpha(z-E)^2 + \beta(z-E)^3$, where $\beta$ is chosen sufficiently large that $g(z+E) - E$ is invertible. Suppose there exists a vector $\psi(\hbar) \in \mathcal{H}$ with $\|\psi(\hbar)\| = 1$, such that $\| [g(H(\hbar)) - E] \psi(\hbar) \| \leq C \hbar^\lambda$ for some $\lambda > 0$. Then, there exists $C'$, such that*

$$\| [H(\hbar) - E] \psi(\hbar) \| \leq C' \hbar^\lambda.$$

This completes the proof of Theorem 3.1. ∎

# References

[1] Hagedorn, G.A., and Robinson, S.L.: Bohr-Sommerfeld quantization rules in the semi-classical limit, *J. Phys. A: Math. and Gen.*, **31**, 10113-10129 (1998).

[2] Khaut-Duy, M.D.: Formule des traces semi–classique pour une énergy critique et construction de quasi-modes à l'aide d'états cohérents, *Doctoral Thesis*, Université Paris IX Dauphine (1996).

[3] Goldstein, H.: *Classical Mechanics*, Second Edition, Addison-Wesley Publishing Company, Inc., Reading, Massachusetts (1980).

[4] Thomas, L.E. and Villegas-Blas, C.: Asymptotics of Rydberg states for the hydrogen atom, *Commun. Math. Phys.* **187**, 623–645 (1997).

[5] Bander, C. and Itzykson, C.: Group theory and the hydrogen atom, *Rev. Mod. Phys.* **38** 330–345 (1966).

[6] Gay, J.-C., Delande, D., and Bommier, A.: Atomic quantum states with maximum localization of classical elliptic orbits, *Phys. Rev. A* **39**, 6587–6590 (1989).

[7] Nauenberg, M.: Quantum wave packets on Kepler orbits, *Phys. Rev. A* **40**, 1133–1136 (1989).

[8] Klauder, J.R.: Coherent states for the hydrogen atom, *J. Phys. A* **29**, L293–L298 (1996).

[9] Hagedorn, G.A.: Semiclassical quantum mechanics, IV: large order asymptotics and more general states in more than one dimension, *Ann. Inst. Henri Poincar*, Vol. 42, no. 4, 363–374 (1985).

[10] Hagedorn, G.A.: *Molecular Propagation through Electron Energy Level Crossings*, Memoirs of the American Mathematical Society, Volume 111, Number 536, American Mathematical Society, Providence, Rhode Island (1994).

[11] Gallavoti, G.: *The Elements of Mechanics*, Springer-Verlag, New York (1983).

[12] Kamke, E.: *Differentialgleichungen I. Gewönliche Differentialgleichungen* (Auflage 6) Leipzig: Akademische Verlagsgesellschaft Geest und Portig K.-G. (1969).

[13] Bargmann, V.: On a Hilbert space of analytic functions and an associated integral transform, *Commun. Pure and App. Math.*, Vol. XIV, 187-214 (1961).

[14] Hagedorn, G.A.: Raising and lowering operators for semiclassical wave packets, *Ann. Phys.* **269**, 77–104 (1998).