Zeitschrift: Helvetica Physica Acta
Band: 59 (1986)
Heft: 4

Artikel: Review of operating atomic beam sources
Autor: Haeberli, W.
DOI: https://doi.org/10.5169/seals-115707

Nutzungsbedingungen
Die ETH-Bibliothek ist die Anbieterin der digitalisierten Zeitschriften auf E-Periodica. Sie besitzt keine Urheberrechte an den Zeitschriften und ist nicht verantwortlich für deren Inhalte. Die Rechte liegen in der Regel bei den Herausgebern beziehungsweise den externen Rechteinhabern. Das Veröffentlichen von Bildern in Print- und Online-Publikationen sowie auf Social Media-Kanälen oder Webseiten ist nur mit vorheriger Genehmigung der Rechteinhaber erlaubt. Mehr erfahren

Conditions d'utilisation
L'ETH Library est le fournisseur des revues numérisées. Elle ne détient aucun droit d'auteur sur les revues et n'est pas responsable de leur contenu. En règle générale, les droits sont détenus par les éditeurs ou les détenteurs de droits externes. La reproduction d'images dans des publications imprimées ou en ligne ainsi que sur des canaux de médias sociaux ou des sites web n'est autorisée qu'avec l'accord préalable des détenteurs des droits. En savoir plus

Terms of use
The ETH Library is the provider of the digitised journals. It does not own any copyrights to the journals and is not responsible for their content. The rights usually lie with the publishers or the external rights holders. Publishing images in print and online publications, as well as on social media channels or websites, is only permitted with the prior consent of the rights holders. Find out more

Download PDF: 22.01.2026

ETH-Bibliothek Zürich, E-Periodica, https://www.e-periodica.ch

Helvetica Physica Acta
Vol. 59, 1986 513-525

018-0238/86/040513-13$1.50+0.20/0
1986 Birkhäuser Verlag, Basel

REVIEW OF OPERATING ATOMIC BEAM SOURCES

W. Haeberli

Department of Physics, University of Wisconsin
Madison, Wisconsin 53706 U.S.A.

ABSTRACT

The progress in the production of polarized beams by the atomic-beam method since the previous workshop in Vancouver is reviewed. Improvements in the density of the thermal neutral beam of polarized H° atoms result primarily from the lower average velocity of cooled beams, and not from any significant increase in the flux density of polarized atoms produced. Polarized H^+ (D^+) beams are approaching 0.5 mA and polarized H^- (D^-) beams of 18 μA have been reported. In a pulsed source, 30 μA H^- has been achieved in routine operation. The increase in ion beam results in part from the use of slower atomic beams, and in part from persistent efforts in the step by step improvement of operating sources.

1. Introduction

In the preparation of this lecture, I followed the wishes of the organizers of this workshop. They suggested that I limit my remarks to progress made since the last workshop at Vancouver [1], and to emphasize demonstrated performance of operating sources rather than projections about possibly promissing but untried schemes. Readers who are interested in a broader review, I refer to earlier workshops in this series [1-3] and to a recent review paper by Grüebler at the Polarization Symposium in Osaka [4]. Other review papers can be found in the proceedings of the conferences on High Energy Spin Physics [5,6]. For the student who wants an introduction to the basic concepts, an old paper in the Annual Reviews of Nuclear Science is still useful [7].

2. Conventional Atomic Beam Source

In all operating atomic beam sources, hydrogen or deuterium atoms are produced by dissociation of hydrogen in an RF discharge. Atoms emerging from the nozzle of the discharge tube are directed along the axis of a six-pole magnet. The imhomogeneous magnetic field in the magnet exerts a restoring force $F_r = -kr$ on the atoms whose spin projection is $m_j = +\frac{1}{2}$. Atoms with $m_j = -\frac{1}{2}$ experience a corresponding force away from the axis of the magnet (Fig. 1) and are removed by pumps. The atomic beam at the exit of the magnet then consists entirely of $m_j = +\frac{1}{2}$ atoms, except for a small contamination ($\leq 2\%$) of $m_j = -\frac{1}{2}$ atoms which either were so fast or moved so close to the axis of the magnet that they remained within the magnet aperture.

After the magnet exit, the atomic beam is exposed to RF fields in order to produce transitions between hyperfine states. Depending on the transition induced, nuclear polarization approaching $P = \pm 1$ for protons is obtained. After the RF transition units, the atomic beam eventually enters some kind of ionizer, where the polarized atoms are turned into positive or negative polarized ions.

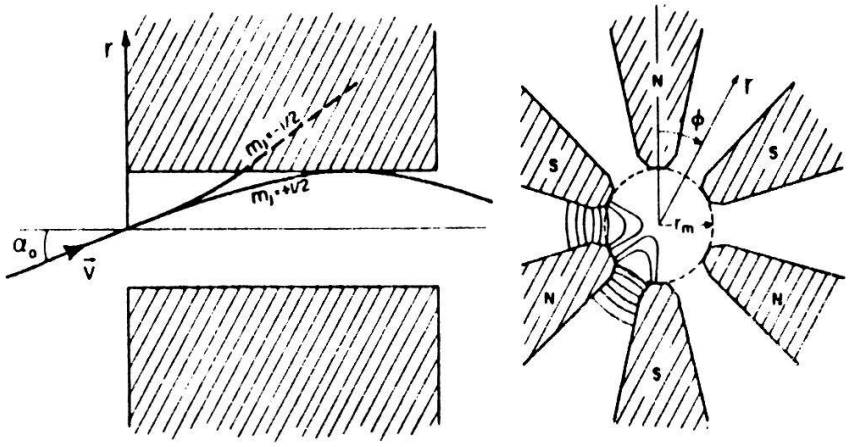

Fig. 1 Deflection of hydrogen atoms in the inhomogeneous magnetic field of a six-pole magnet.

An atom entering the six-pole magnet on axis, as in Fig. 1, will undergo simple harmonic motion in r, whose frequency increases with increasing pole tip field B_m and decreasing pole tip radius r_m. For typical values of r_m and B_m (r_m = 0.5 cm, B_m = 0.6 T) the radial frequency is f ≈ 2kHz. Since room temperature atoms have a most probable velocity of about 2km/sec, a sensible length of the magnet is about 0.5 m, such that most atoms undergo about half an oscillation inside the magnet. As the temperature of the atomic beam is lowered, the optimum magnet will be correspondingly shorter. We note, however, at this point already, that it is not possible to choose a magnet geometry such that atoms over a wide velocity spectrum all converge toward a point where they can be ionized. Rather, many atoms diverge when they reach the exit of the magnet, or soon thereafter. This dependence of the focussing properties on particle velocity, referred to as "chromatic aberration" of the magnet (seen as a thick focussing lens), presents the fundamental problem in the design of an optimum magnet system. In contrast to the uniform magnet aperture shown in Fig. 1, actual magnets use an aperture which slowly increases beyond the magnet entrance. This is the simplest measure to achieve some reduction of chromatic aberrations. Modern sources achieve a gain in intensity by following the spin separation six-pole by a separate second six-pole (compressor magnet), so that the system more nearly acts as an achromatic focussing lens.

It is apparent from Fig. 1 that for every particle velocity v there is a maximum angle α_0. For $\alpha > \alpha_0$ the restoring force is no longer sufficient to retain the atoms inside the pole tip radius r_m. The angle α_0 is readily calculated from energy considerations [$\mu_B B_m = \frac{1}{2}m(v \sin\alpha_0)^2$]. Clearly, with increasing particle velocity, the acceptance angle α_0 and thus the acceptance solid angle $\Delta\Omega$ of the magnet decreases. If $\Delta\Omega$ is averaged over the velocity spectrum, one obtains [7]:

$$\langle\Delta\Omega\rangle = 2.09\ \mu_B B_m/kT = 1.4 B_m(\text{Tesla})/T(\text{K}), \qquad (1)$$

where μ_B is the Bohr magneton. For a room temperature atomic beam, typical values are $\alpha_0 = (\mu_B B_m/\frac{1}{2}\, m\langle v^2\rangle)^{1/2} = 2°$, and $\Delta\Omega$ = 3 msr, where we assumed B_m = 0.6T.

For later comparison to new developments, we state here the performance of a conventional atomic beam source. A typical example is the source described by the ETH group about 10 years ago [8]. The atomic beam intensity 55 cm from the exit of the magnet (i.e. at the position of the ionizer) was 2.0×10^{16} atoms/sec, 80% of which were within a diameter of 10 mm. The average velocity of the atoms was found to be (2.6 ± 0.6) km/sec. It should be mentioned, that already a decade before, the group at Saclay [9] had reported beam intensities up to 5×10^{16} atoms/sec some 60 cm from the magnet exit, but few details of the apparatus were given.

It must be kept in mind, here as later, that high absolute accuracy in the measurement of atomic beam intensities is difficult to achieve, so that comparison of atomic beam intensities is problematic. The most accurate absolute measurements are probably those which are based on observing the pressure rise which the atomic beam causes inside a separate small vessel, provided proper precautions are taken. The precautions include calibration by admitting metered amounts of H_2, and the choice of wall materials that assure recombination of the atomic beam.

3. Progress in Atomic Beam Sources

It has long been realized that lowering the temperature of the atomic beam has beneficial effects: (i) the solid angle of acceptance $\langle\Delta\Omega\rangle$ of the magnet increases at T^{-1} (eq. 1); and (ii) the increased dwell time of the atoms in the ionization region increases the ionization probability in proportion to $\langle 1/v\rangle$, or roughly $T^{-1/2}$. Discussions in the literature often choose to neglect that these gains are offset in part by changes in the opposite direction, in particular (iii) a decrease in the effusion rate from the dissociator nozzle in proportion to $\langle v\rangle$, because the gas density in the dissociator is limited to a certain value by gas scattering, thus the optimum gas flow into the dissociator decreases when the dissociator is cooled. Combining the above factors, the gain in ion beam intensity is expected to be proportional to T^{-1}, while the atomic beam intensity varies as $T^{-1/2}$. The actual situation is yet more complicated, since we have neglected the effect of gas scattering outside the nozzle and in the six-pole magnet, the temperature dependence of the collision cross section, as well as the problem of recombination in the nozzle. Further it must be realized that eq. (1) was derived for atoms entering the magnet on axis, which in practice is not the case. But most importantly, as the acceptance angle α_0 increases e.g. from 2° for a room temperature beam to 10° for a beam at 60K, the divergence angle at the magnet exit also increases. Obviously, a 10° divergence angle at the magnet exit would be disasterous since only a small fraction of atoms would enter the effective aperture of the ionizer some 50 cm away. Thus, for cooled beams, optimum magnet design to avoid chromatic aberations becomes of prime importance. All in all, it should not be surprising that the full T^{-1} gain in ion beam intensity has not been realized in practice.

The first success in cooling an atomic beam was reported twenty years ago, when Ad'yasevich et al. [10] found that the ion beam intensity doubled when the discharge tube was cooled with liquid nitrogen. Later, it was found to be of advantage to cool only the exit nozzle of the dissociator. A copper nozzle cooled with flowing liquid nitrogen was developed in Bonn [11] a decade ago. For the pulsed source at the Argonne ZGS, a copper block, cooled by a refrigerator, was clamped to the glass nozzle to cool the beam [12]. The ion beam intensity was found to be proportional to $T^{-1/2}$ down to the lowest temperature (28K) of the copper block. This cooling method is

still used today, but is effective only with pulsed beams, because in steady state operation the heat transfer through the glass is insufficient.

For use in atomic beam sources intended for DC operation, cooled copper nozzles have been further developed. Coatings are required to reduce recombination on the cold copper surface. At Bonn [13], treatment of the surface with phosphoric acid was found to be effective for nozzles cooled to liquid nitrogen temperature (77K). In the source at ETH [4,14], and also at SIN [15], a small percentage of N_2 is added to the H_2 gas supply. In this way, a layer of condensate deposits on the cold surfaces, which inhibits recombination fairly effectively down to 35K. The copper nozzle can be coupled to the RF discharge tube by a short teflon piece, to produce the transition from room temperature to the cold surface without exposing the atoms to extensive surfaces of large recombination coefficient at intermediate temperatures. This technique, borrowed from experimenters who cool H atoms to very low temperatures, was already in use at the time of the previous workshop [14]. At Brookhaven, the technique has been refined [16] by leaving a very small gap between copper at 8K and the teflon piece, such that the hydrogen atoms collide only with glass or teflon at temperatures where the recombination coefficient is small, or with copper covered with condensed gas.

In some cases, the velocity distribution of the beam has been measured to determine if the beam actually attains the temperature of the nozzle. A most probable velocity of about 1.5 km/sec (i.e. $T \approx 100K$) was found at Bonn [13] with a copper nozzle, and at CERN [17] with a microwave dissociator, both cooled to 77K. At ETH [4] the beam temperature was found to be 34K for a nozzle temperature of 20K. The consistent finding, that the beam temperature is higher than the nozzle temperature does not necessarily indicate poor heat transfer from the cold surface to the gas. Rather, it may be explained by the onset of supersonic flow. That the flow is supersonic has been confirmed in all the above cases by the observation that the velocity spread of the atoms in the beam is significantly less than expected from an effusion source (e.g. Mach number 2.5 reported in ref. 13). The narrowing of the velocity distribution is very beneficial, since it eases the problem of chromatic aberrations in the magnet system to some extent.

Cooling of the beam alone will not increase the beam intensity unless corresponding changes are made on the beam transport system. The atomic beam collimators between dissociator and six-pole magnet must be increased, and the length of the magnet should be reduced. The design of an optimum magnet system presumes that the velocity distribution from the source is known. For modern sources the magnet system is tailored to the cold atomic beam system. All this was already common knowledge at the last workshop [1].

There is no question that cooled atomic beam sources represent progress in that the density of atoms in the ionizer is increased. An interesting comparison can be made on the basis of measurements at ETH, where the same ionizer was used with the old room temperature atomic beam source [8] and the new cooled atomic beam source which permits cooling of the nozzle down to 20K [4]. With the cold source, the best beam, obtained for a nozzle temperature of 35K (average beam velocity ≈ 1 km/sec), was four times as large as for the old room temperature source (average beam velocity 2.6 km/sec). Thus the gain of intensity derives primarily from the reduced beam velocity. The number of atoms has increased only slightly. The conclusion that the number of atoms entering the ionizer is roughly the same for conventional and cooled source is also confirmed by direct atomic beam

measurements at SIN [15], where for either source the useful intensity is found to be 2×10^{16} atoms/sec. The total atomic beam output, on the other hand, has been reported to exceed 10^{17} atoms/sec [4]. We conclude that for these particular cooled sources, 30% or less of the atoms appear as useful output in the ionizer, while for room temperature sources the fraction is larger than 80%.

It is interesting to note, that some of the new cooled sources are rather simpler in design that the old room temperature sources. The source at SIN, described by Jaccard [15] is a prime example (Fig. 2). In this source, considerable simplification was achieved without loss in performance by using only two pumping stages. For comparison, some of the conventional sources use up to five differential pumping stages. The simplification of the vacuum system is possible, in part, because cooling reduces the gas throughput of the dissociator by about a factor three. Jaccard [15] points out, in addition, that the larger magnet acceptance angle requires the nozzle to be closer to the magnet, so that insufficient space remains for effective differential pumping.

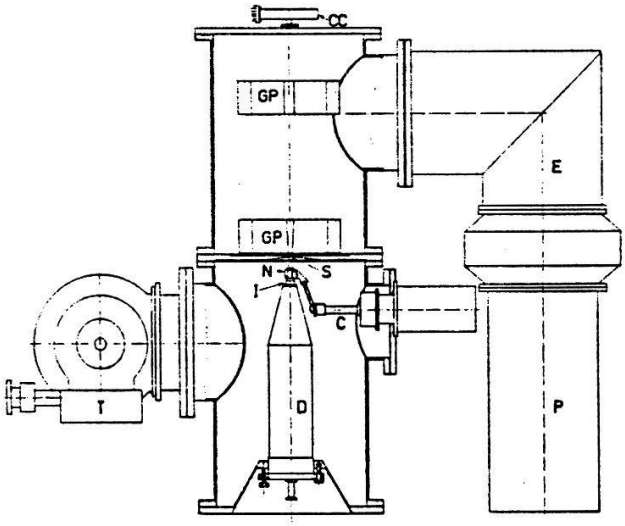

Fig. 2 Cold atomic beam source at SIN. D: water cooled dissociator; N: copper nozzle; I: nozzle mounting; C: cold head; S: skimmer; 6P: six-pole magnet; CC: compression chamber with ionization gauge; T: 2000ℓ/sec turbomolecular pump; P: 3000ℓ/sec diffusion pump, E: right-angle valve. The figure is from ref. [15].

The cooled sources differ considerably in magnet design. At Brookhaven, the atomic beam source, constructed at ANAC, consists of four separate short magnets to permit flexible adjustment of the field contour along the beam. More recent sources [13,4] optimize the magnet geometry by trajectory calculations and find two short magnets, each between 10 and 16 cm long, sufficient. The magnets at SIN and ETH are characterized by a wide open geometric (see fig. 2), i.e., large separation (≈ 30 cm) between the magnets, and relatively large magnet apertures (e.g. 20 and 30 mm at ETH, see ref. 18). This is in striking contrast to another successful atomic beam source: the source at Bonn [13] uses tapered magnets of maximum opening 15 mm and a spacing of only 9 cm between the magnets. The source at Bonn was optimized for an atomic beam velocity of 1.5 km/sec, while the ETH design is for 1 km/sec. To me it is not clear why the optimum design is so different in the two cases. In the design of the Bonn source, special weight was given to a small atomic beam diameter, because of the small radial acceptance (3 mm) of their ionizer. The atomic beam profiles at Bonn, measured 30 cm from the exit of the second magnet, are thus relatively narrow (≈ 10 mm). It

appears that this source may have smaller chromatic aberrations, but at the expense of a reduced acceptance solid angle at the entrance because the tighter magnet aperture does not permit as high a field at the pole tip.

All three sources mentioned above [4, 13, 15] produce about the same useful density of the atomic beam in the ionizer, in spite of the differences in design. The beam from one of the sources [13] is faster by a factor 1.5, but compensates for it by a somewhat higher intensity.

A new experimental atomic beam source at Brookhaven [16] has succeeded in cooling the accomodator down to 8K without excessive recombination. Further measurements on beam intensity and beam divergence at the exit of the short spin separation magnet are required before the promise of such low temperature beams can be judged. The current status of this project will be described later at this workshop.

4. Ionization: Production of Positive Ions

Positive ions (H^+,D^+) are produced by electron bombardment of polarized H° or D° atoms inside a solenoid. The magnetic field is not only required to confine the electrons, but also to decouple electron spin and nuclear spin. The best electron bombardment ionizers reached an efficiency of 3% for room temperature atomic beams already several years ago. For the now available cooled beams the efficiency is correspondingly larger, and approaches 10%. The ionization efficiencies quoted above are known to apply to atoms entering the ionizer within a diameter of the order 1 cm, but it is not known how the ionization efficiency changes for larger diameter of the atomic beam.

From the known ionization cross section and ionization efficiency, the current density of electrons in modern ionizers has been estimated to be a few A/cm^2 [19], but the uncertainty in electron energy causes considerable uncertainty in the cross section to be assumed. A Saturne, it has recently been shown [20] that the charge density of electrons can be deduced directly from an accurate measurement of the ion beam energy, since the beam energy depends on the space charge potential in the ionizer.

Even though there has been no recent progress in electron bombardment ionizers, new records of beam current have been reached with cooled atomic beams because of the reduced velocity of the atoms. The sources at ETH and SIN report a current approaching 500 μA. A current of 280 μA has been reached at Saturne [20]. All of these use ionizers based on the CERN/ANAC design [17].

Discussion at the 1981 workshop in Ann Arbor created a great deal of optimism that considerabe improvement in ion beam intensity can be achieved by ionizing the atoms in an ECR ionizer, but there were concerns about possible depolarization. It was concluded that one should look further into this scheme. The 1983 workshop in Vancouver came to the same conclusion once more. The idea still has not been tried out. A recent publication [21] and a paper by Clegg at this workshop discusses problems of depolarization, with the conclusion that the method has a good chance of success. An actual test is finally planned to be carried out this summer. Alessi and Prelec [22] have proposed ionization by the high current density of electrons produced by a hollow cathode discharge.

5. Ionization: Production of Negative Ions

5.1 Double Charge Exchange from H^+ to H^-

The usual method consists of charge exchange from H^+ (or D^+) to H^- (or D^-) in Na vapor at an ion energy of some 5 keV [4]. No new developments have been reported, except that with the improved H^+ (or D^+) beam obtained with cooled atomic beams a corresponding gain in H^- (or D^-) beam has been realized. The group at ETH produced a DC current of 18 μA polarized H^- by this method [4].

5.2 Direct Charge Transfer (Colliding Beams Method)

In collisions between polarized H° atoms and fast Cs° atoms, polarized H^- ions are produced by transfer of an electron from Cs° to H°. The cross section for this charge exchange reaction shows a broad maximum for a Cs° energy around 60 keV [23]. With a conventional atomic beam (room temperature) of 2×10^{16} atoms/sec this method typically yields 1 μA H^- for 1 mA/cm² Cs° beam of 40 keV energy. Large currents of Cs^+ ions are easily produced by surface ionization of Cs vapor on a hot porous W surface. However, it is difficult to obtain a well focussed Cs° beam at the required distance (≈ 0.8 m, see ref. 24) from the Cs^+ source, because of space charge in the extraction gap. In the source developed at Wisconsin [24], the Cs° current density in the region where the charge exchange collisions take place is limited to some 3 mA/cm², and correspondingly the H^- beam current is at best about 3 μA.

A much improved version of the Wisconsin source, designed for pulsed operation, has been constructed at Brookhaven to provide 0.5 msec pulses for injection into the AGS. Considerable progress has been made on this source ("PONY") since the last workshop [1]. The results will be presented by Alessi in another paper at this meeting. It is sufficient here to mention the 30 μA pulses of polarized H^- have been extracted in routine operation, and currents as large as 50 μA have been obtained.

A recent paper [25] reports significant progress in understanding the limitations of the Cs° beam intensity. The result of this study will be summarized here because it is not otherwise presented at this workshop.

The arrangement shown in Fig. 3 was used to measure the intensity of the Cs° beam at a distance of 0.8 m from the emitter, using a water cooled calorimeter. The distance was chosen to correspond to the geometry of a $\vec{H}° + Cs° \rightarrow \vec{H}^-$ ionizer, where the H° beam and Cs° beam interact over a distance of some 30 cm, and where space must be provided for various other components (neutralizer for Cs^+ beam, deflector for removal of remaining Cs^+, and ion optic elements for extraction of the $\vec{H}^-$ beam). The parameters which were varied in this study are: the beam current from the emitter (by changing the Cs reservoir temperature); the extraction voltage; the extraction geometry (electrode spacing, apex angle of extraction electrode); the curvature of the concave W emitter; and the diameter of the tungsten emitter. The location and diameter of the waist of the Cs° beam, and the divergence of the beam were deduced from beam profiles measured by beam scanners (Fig. 3) at three distances from the emitter. The results show that over a wide range of extraction voltages V_E, the total extracted Cs^+ beam output I (for fixed oven temperature) is independent of V_E at least up to I = 20 mA. However, V_E sharply affects the focus of the beam, in particular the location and diameter of the beam waist. The results accurately follow a scaling law:

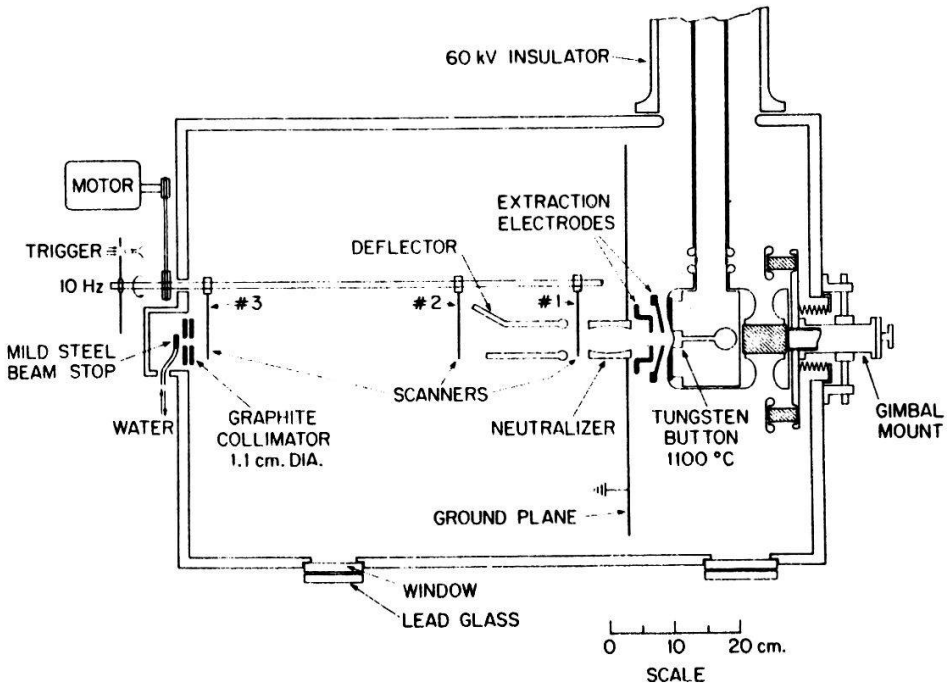

Fig. 3 Test setup for the study of the intensity and divergence of a fast Cs° beam, produced by neutralization of a 10-55 keV Cs^+ beam in Cs vapor. The figure is from ref. [25].

beam trajectories are the same if $I/V^{3/2}$ is kept constant. For the proper choice of this parameter, 50% of the Cs^+ beam extracted can be focussed as Cs° beam into the 1.1 cm calorimeter aperture, as shown in Fig. 4. The reason that a larger fraction can not be transported into the calorimeter is that the beam waist is always too close to the Cs^+ gun, no matter what curvature of the emitter is used.

The work quoted above at the same time showed that a very well focussed beam is easily obtained some 10 to 20 cm from the W emitter, simply

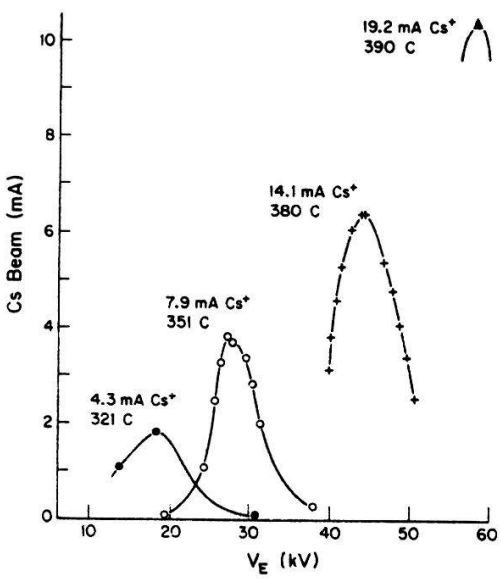

Fig. 4 Cs° beam intensity (in particle-mA) which reaches the calorimeter in Fig. 3 for four different temperatures of the Cs supply reservoir. The expected polarized H^- beam intensity for a room temperature atomic beam source is about 1 μA per mA Cs beam.

by raising the extraction voltage (e.g.to 53 keV for 10 mA Cs^+ output). This suggests the use of a lens to transport the beam from this waist into the ionization region. A system incorporating this feature is presently under test at the University of Washington (Fig. 5). A quadrupole triplet of 5 cm aperture transports the Cs^+ beam waist near the Cs gun to the center of the ionization region some 150 cm away. The system has been described by Trainor et al. [26]. They report a Cs^+ beam current of more than 15 mA for an extraction voltage ≧ 40 kV. The diameter of the Cs beam in the ionizer is estimated to be 7-8 mm, i.e. similar to the atomic beam diameter. In addition, this system allows the use of a large gap between Cs^+ emitter and extraction electrode which reduces problems of electrical breakdown in the extraction gap.

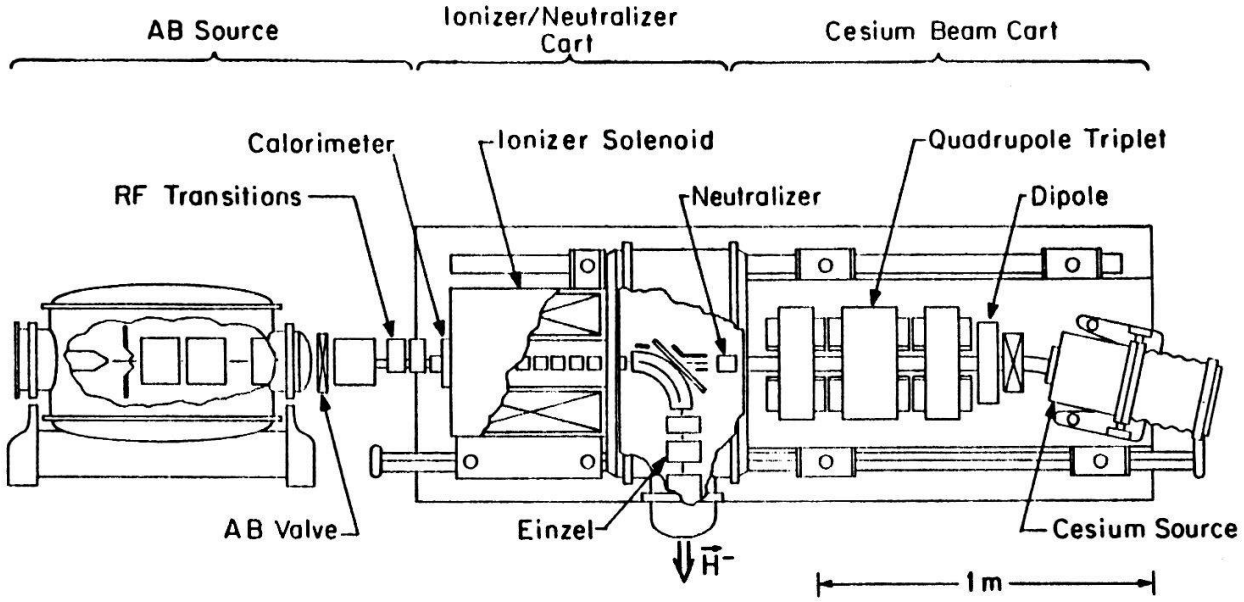

Fig. 5 Colliding-beams source for polarized H^- and D^- at the University of Washington. The atomic beam source is on the left. The figure is from ref. [26].

One of the disadvantages of a collinear arrangement of $\vec{H}^\circ$ and Cs° beam is that part of the Cs° beam impinges on the dissociator nozzle. Thus the question arises whether this ionization method is compatible with a cooled dissociator nozzle. Trainor [26] estimates that at worst 0.8% of the Cs° beam will reach the dissociator. For a Cs° beam of 10 particle-mA this corresponds to a thermal load of 3W, only part of which will be deposited on the cooled nozzle. Sufficient cooling power at reasonable cost is available, so that heating of the cooled nozzle by the Cs° beam should not present a major problem.

The developments summarized above suggest that considerable improvements in the production of polarized H^- and D^- can be expedted in the near future.

Ionization of a polarized atomic beam by charge exchange with unpolarized negative hydrogen or deuterium ions ($\vec{H}^\circ + D^- \rightarrow \vec{H}^- + D^\circ$) was proposed already some 20 years ago [27], since this process has a large cross section at low energies. The idea has often been talked about at conferences and workshops. A test of this method, using a ring magnetron to provide the

negative ions, is in preparation at Brookhaven. Progress on this project will be reported later at this workshop.

6. Polarized Heavy Ions and Polarized ^{3}He

Polarized $^{6,7}Li^-$ ions for injection into a tandem accelerator were produced at Heidelberg more than a decade ago, using an atomic beam apparatus. Ionization of the Li° atoms was by surface ionization on a hot oxygenated W surface. Two new developments have recently been reported. At Heidelberg, a new ion source was built [28] which uses optical pumping of a Li and Na atomic beam, in addition to spin separation in a quadrupole magnet. In this way it has been possible to select atoms in a single hyperfine state. Besides increased beam intensity of polarized Li^- (0.6 μA), also polarized ^{23}Na (1.4 μA) has been produced and successfully accelerated in a tandem accelerator. In another development, at Wisconsin [29] it has been shown that the colliding beam apparatus for production of H^- can also be used to produce useful beam currents of $^{6,7}Li^-$ polarized ions. For this purpose the hydrogen atomic beam source was replaced by a Li° atomic beam apparatus which produced $1.0 \times 10^{16}\vec{L}i°$/sec. When this atomic beam was bombarded with a Cs° beam (36 keV; 2.8 mA/cm^2), 0.18 μA of polarized Li^- ions were extracted from the source. The observed beam current is in excellent agreement with the current expected on the basis of the known charge transfer cross section for $Li° + Cs° \rightarrow Li^- + Cs^+$. Considerably larger beam currents are expected for higher acceleration voltage on the Cs^+ gun, because Cs beam current as well as charge exchange cross section increases with Cs beam energy.

Important progress in the production of polarized $^3He^+$ has been achieved at Laval [30], where a compact ion source has been built and installed in the terminal of a 7.5 MV electrostatic accelerator. The device is based on an atomic beam of excited, metastable 2^3S_1 He atoms. The excited atoms, produced in a cold cathode electron bombardment source, pass through a 14 cm long six-pole magnet, undergo an RF transition, and are then ionized in an electron bombardment ionizer. The beam intensity after the accelerator reached a value of 0.3 μA. Preliminary measurements of the beam polarization, measured with the ^{3}He(d,p)^{4}He reaction, yielded values between 50% and 80%.

In the course of this project, it was observed that the beam intensity increased significantly when the six-pole magnet was connected in an unconventional way: rather than alternating between N (north) and S (south) poles, in the usual way, the sequence of pole tip polarities used is NSSNSS.

7. Future Directions

Previous workshops have been very productive in coming up with new ideas to produce vast improvements in polarized ion source technology. One working group at Vancouver proposed a pulsed source which would produce 240 mA polarized H^- (p. 158, ref. 1), to mention only one example! It might be desirable at some future workshop to reinspect some of our old proposals. For lack of time, many of these discussions stopped short of a meaningful feasibility study, and should undergo a more realistic evaluation. This process must weigh the effort of a development project against the promised reward. No doubt, the right choice requires not only sound technical judgement but also a good measure of intuition.

Besides looking for new ideas, we should be prepared to continue work on improving existing methods step by step. It is trivial, but useful, to be reminded that four improvements of 20% each results in a doubling of the output. But considerably larger improvements may also still be available from design refinements or fine tuning of existing sources, or by sharing improvements between laboratories. Practical wisdom, like discovering the importance of precise electrode alignment in an ionizer, the role of gas impurities in the dissociator, or the type of diffusion pump oil to use, is important. What is the best dissociator geometry, would superconducting six-poles provide an improvement, should six-pole magnets be combined with other multipolarities, can attenuation by gas scattering be reduced? Let us not forget, that the integrated effects of careful, detailed development work of this kind had in the past been the source of significant gains in ion source performance.

Polarized ion sources are complicated devices, and source output is usually not entirely reproducible from week to week. This is a considerable hindrance to source development, because it is difficult to ascertain whether observed changes in beam intensity really are associated with attempted design improvements. In addition, while it is relatively easy to optimize the relevant voltages or currents in the source, it is very difficult to optimize geometry, such as the length of the six-pole magnet, by trial and error. Thus it is important to make use of analytic methods as much as possible. This requires that in the end, predicted and observed performance (e.g. the calculated and measured diameter of the atomic beam) be compared, to establish whether the calculations, on which the optimum design was based, had adequate accuracy.

A certain sense of competition between designers of ion sources at different laboratories has probably had a stimulating effect on source development. However, too much emphasis is sometimes placed on beam intensity at the source exit. Beam emittance and beam energy spread are rarely reported, even though they are important in comparing source performance.

Source development has been tedious and slow. Many aspects are still poorly understood, and good ideas remain untried. Nevertheless, the community of scholars who have contributed to this field can look at their accomplishments with much satisfaction. These developments, which have increased beam intensities several hundred fold over two decades, have made an enormous contribution to our understanding of nuclear spin physics.

8. References

[1] Polarized Proton Ion Sources, Vancouver 1983 [G. Roy and P. Schmor, eds.], AIP Conf. Proc. 117 (1984).

[2] Polarized Proton Ion Sources, Ann Arbor 1981 [A.D. Krisch and A.T.M. Lin, eds.], AIP Conf. Proc. 80 (1982).

[3] High Energy Polarized Proton Beams, Ann Arbor 1977 [A.D. Krisch and A.J. Salthouse, eds], AIP Conf. Proc. 42 (1978).

[4] W. Grüebler, Proc. Sixth int. Symp. Polar. Phenom. in Nucl. Phys., (Osaka, 1985), Suppl. J. Phys. Soc. Jpn. 55 (1986) 435.

[5] W. Haeberli, in High Energy Physics with Polarized Beams and Polarized Targets (Argonne, 1978), AIP Conf. Proc. 51 (1979) 269.

[6] W. Haeberli, High Energy Physics with Polarized Beams and Polarized Targets (Lausanne, 1980), Experientia, Supp. 38 [Birkhäuser, Basel, 1981] p. 199.

[7] W. Haeberli, Ann. Rev. Nucl. Sci. 17 (1967) 373.

[8] R. Risler, W. Grüebler, V. König and P.A. Schmelzbach, Nucl. Inst. Meth. 121, 425 (1974); W. Grüebler, AIP Conf. Proc. 80 (1982) 53.

[9] R. Beurtey, R. Maillard, A. Papineau, and J. Thirion, Saclay Progress Report CEN-N-621, (CEA, France, 1966) p. 81.

[10] B.P. Ad'yasevich, V.G. Antonenko, Yu.P. Polunin, and D.E. Fomenko, J. Nucl. Energy 7 (1965) 187.

[11] W. Schumacher, F. Barz, E. Dreesen, W. Hammon, H. Hansen, S. Penselin and A. Scholzen, Nucl. Instr. Meth. 127 (1975) 157.

[12] P.F. Schultz, E.F. Parker and J.J. Madsen, Polar. Phenom. in Nucl. Phys. (Santa Fe), AIP Conf. Proc. 69 (1981) 909.

[13] H.G. Mathews, Ph.D. Thesis, University of Bonn, 1979; H.G. Mathews, A. Kruger, S. Penselin and A. Weinig, Nucl. Instr. Meth. 213 (1983) 155.

[14] W. Grüebler, Polarized Proton Ion Cources (Vancouver), AIP Conf. Proc. 117 (1984) 1.

[15] S. Jaccard, Proc. Sixth Int. Symp. Polar. Phenom. in Nucl. Phys., (Osaka, 1985), Suppl. J. Phys. Soc. Jpn. 55 (1986) 1062.

[16] A. Hershcovitch, A. Kponou, B. DeVito, R. Meier, V. Kovarik and Th. Sluyters, Particle Accelerator Conf. Vancouver, 1985 (to be published).

[17] H.F. Glavish, High Energy Polarized Proton Beams, AIP Conf. Proc. 42 (1978) 47.

[18] P.A. Schmelzbach, D. Singy, W.Z. Zhang and W. Grüebler, Proc. Sixth Int. Symp. Polar. Phenom. in Nucl. Phys., (Osaka, 1985), Suppl. J. Phys. Soc. Jpn. 55 (1986) 1060.

[19] W. Haeberli, Polarized Proton Ion Sources AIP Conf. Proc. 80 (1982) 85.

[20] R. Vienet, Saturne Report LNS/SM 85/102 (unpublished), and J. Arvieux, Proc. Sixth Int. Symp. Polar. Phenom. in Nucl. Phys., (Osaka, 1985), Suppl. J. Phys. Soc. Jpn. 55 (1986) 304.

[21] T.B. Clegg, V. König, P.A. Schmelzbach and W. Grüebler, Nucl. Instr. Meth. A238 (1985) 195.

[22] J. Alessi and K. Prelec, Workshop on Polarized ^{3}He Beams and Targets, AIP Conf. Proc. 131 (1985) 18.

[23] G. Clausnitzer, Progress Report, University of Giessen 1981 (unpublished).

[24] W. Haeberli, M.D. Barker, C.A. Gossett, D.G. Mavis, P.A. Quin, J. Sowinski and T. Wise, Nucl. Instr. Meth. 196 (1982) 319.

[25] T. Wise and W. Haeberli, Source for Intense Collimated Beams of Fast Cs^+ and Cs°, Nucl. Instr. Meth. B6 (1985) 566.

[26] T. Trainor et al., Proc. Sixth Int. Symp. Polar. Phenom. in Nucl. Phys., (Osaka, 1985), Suppl. J. Phys. Soc. Jpn. 55 (1986) 1150, and private communication.

[27] W. Haeberli, Nucl. Instr. Meth. 62 (1968) 355.

[28] E. Steffens, Proc. Sixth Int. Symp. Polar. Phenom. in Nucl. Phys., (Osaka, 1985), Suppl. J. Phys. Soc. Jpn. 55 (1986) 459.

[29] G.S. Masson, T. Wise, P.A. Quin, and W. Haeberli, Nucl. Instr. Meth. A242 (1986) 196.

[30] R.J. Slobodrian, C. Rioux, J. Giroux and R. Roy, AIP Conf. Proc. 131 (1985) 8.

Secretary's report, Session (A), J.G. Alessi:

The following is a summary of the discussion following the review by W. Haeberli on atomic beam sources. A question was raised about the compatiblity of the Cs° beam ionizer with a cold atomic beam. Professor Haeberli answered that the Cs° beam power at the dissociator nozzle could be a problem for very cold beams. There could be ~ 1 Watt of beam power reaching the cooled nozzle.

Concerning the point raised during the review on the polarized ion beam intensity not scaling as $T^{-3/2}$ with atomic beam temperature, there were several comments. At Karlsruhe (E. Huttel), by monitoring pressure and dissociation degree, they feel that the H° flow out of the dissociator does not change with nozzle temperature (from 300 K to 100 K). However, when monitoring the H^+ output with the sextupole off, as the temperature is changed they don't see the $T^{-1/2}$ gain expected from improved ionization and feel that this gain is cancelled by an increased gas scattering $\propto T^{1/2}$. Finally, with the sextupoles on they do see a gain in $H^+ \propto 1/T$, which is what one might expect from the increased solid angle acceptance of the sextupoles as the beam is cooled.

Other points made on the scaling of source output with H° temperature concerned the fact that with a larger sextupole acceptance angle for a cold H° beam, one gets a larger emittance H° beam after the magnets, and therefore one needs a large enough ionizer acceptance to realize the full gain from cooling. P. Schmelzbach pointed out that in comparing H° through sextupole systems vs. temperature in computer simulations, one needs to look at cases giving comparable final H° beams.