Zeitschrift: Helvetica Physica Acta
Band: 57 (1984)
Heft: 5

Artikel: Rigorous theorems for surface energies of finite and semi-infinite jellia
Autor: Lehmann, D. / Ziesche, P.
DOI: https://doi.org/10.5169/seals-115519

Nutzungsbedingungen
Die ETH-Bibliothek ist die Anbieterin der digitalisierten Zeitschriften auf E-Periodica. Sie besitzt keine Urheberrechte an den Zeitschriften und ist nicht verantwortlich für deren Inhalte. Die Rechte liegen in der Regel bei den Herausgebern beziehungsweise den externen Rechteinhabern. Das Veröffentlichen von Bildern in Print- und Online-Publikationen sowie auf Social Media-Kanälen oder Webseiten ist nur mit vorheriger Genehmigung der Rechteinhaber erlaubt. Mehr erfahren

Conditions d'utilisation
L'ETH Library est le fournisseur des revues numérisées. Elle ne détient aucun droit d'auteur sur les revues et n'est pas responsable de leur contenu. En règle générale, les droits sont détenus par les éditeurs ou les détenteurs de droits externes. La reproduction d'images dans des publications imprimées ou en ligne ainsi que sur des canaux de médias sociaux ou des sites web n'est autorisée qu'avec l'accord préalable des détenteurs des droits. En savoir plus

Terms of use
The ETH Library is the provider of the digitised journals. It does not own any copyrights to the journals and is not responsible for their content. The rights usually lie with the publishers or the external rights holders. Publishing images in print and online publications, as well as on social media channels or websites, is only permitted with the prior consent of the rights holders. Find out more

Download PDF: 27.11.2025

ETH-Bibliothek Zürich, E-Periodica, https://www.e-periodica.ch

Helvetica Physica Acta, Vol. 57 (1984) 621–643 0018–0238/84/050621–23$1.50 + 0.20/0
© Birkhäuser Verlag Basel, 1984

Rigorous theorems for surface energies of finite and semi-infinite jellia

D. Lehmann and P. Ziesche, Technische Universität Dresden,
Sektion Physik, Wissenschaftsbereich Theoretische Physik,
DDR-8027 Dresden, Mommsenstraße 13

(17. II. 1984; rev. 14. IV. 1984)

Abstract. For the general case of a neutral finite jellium with constant background density n within an arbitrary volume $\mathcal{V}$ the virial theorem, the 'detailed' and 'total' Pauli-Hellmann-Feynman theorems and some expressions for pressure and work functions are derived. Exploiting this general concept in connection with a consequent introduction and use of surface (as well as edge) energies a series of rigorous theorems for the special geometries of a sphere, a void, a cylinder and its limits planar slab and straight wire are obtained. For the limiting case of a semi-infinite jellium one of the theorems reproduce a theorem given by Vannimenus and Budd.

1. Introduction

Even today the tendency continues, to find rigorous theorems (like 'fix points') in the otherwise unsolved or only approximately solved problems of the many-body theory or statistical mechanics and to use them (Velo, Wightman 81). Examples for such theorems are in the case of the many-body theory of a quantum mechanical electron gas: Luttinger theorem, Ward identity for the Fermi edge, fluctuation-dissipation theorem, compressibility sum rule, Ferrel stability condition, (Pauli-)Hellmann-Feynman theorem, virial theorem. The (Pauli-) Hellmann-Feynman theorem has been applied recently to the problem of structure energy and phonons especially of GaAs (Kunc, Martin 83), it is considered as a powerful tool, when applied to lower-symmetrical displacement patterns (Kunc, Martin 81, 82), and it is applied to the formation energy of point defects (Deutz, Zeller, Dederichs 82). Fernandez and Castro (82) discuss the virial theorem in connection with the boundary conditions for approximate wave functions.

Recently the Virial Theorem (VT) and connected with it the Pauli-Hellmann-Feynman-Theorem (PHFT) have been considered for finite and semi-infinite jellia (Ziesche 80; Ziesche, Lehmann 82 and 83 – hereafter referred to as I and II, respectively; Lehmann, Ziesche 83; Ziesche 83). Heinrichs (79) has pointed out the necessity to start with finite systems. While Vannimenus and Budd (74) derived a surface theorem for the semi-infinite jellium starting with the (non-finite) geometry of an extended planar jellium slab, similar but differing theorems were obtained by Ziesche and Lehmann (82, 83), starting with such finite systems as a sphere or a spherical shell. Now the reason for that discrepancy has become clear. While in I and II the 'total' PHFT, which is directly connected with the VT,

was considered only, we know now, that there exist for each system one VT, but as much as 'detailed' PHFT, as linear parameters L_i are necessary to characterize completely the geometry (one for a sphere, two for a spherical shell or a finite cylinder etc.). Exploiting this idea in connection with the consequent introduction and use of surface energies (as well as edge and corner energies), a series of theorems are obtained, showing, that the mentioned discrepancy does not exist.

In Section 2 for the general case of a neutral finite jellium with constant background density n within an arbitrary volume $\mathcal{V} \triangleq (L_1, L_2, \ldots)$ the VT, the 'detailed' and 'total' PHFT's and expressions for pressure and work function are derived. The background density n is assumed to be so high (r_s so small), that no Wigner lattice occurs. Although the groundstate energy $E_{\mathcal{V}}$ is defined in the n-L_1-L_2-$\cdots$ subspace originally only on discrete faces $n \equiv N/\mathcal{V}$ with $N = 1, 2, 3, \ldots$, it is further assumed that $E_{\mathcal{V}}$ can be continued 'naturally' between these faces, allowing the differentiations $(\partial E_{\mathcal{V}}/\partial n)_{L_1, L_2, \ldots}$ and $(\partial E_{\mathcal{V}}/\partial L_i)_n$. This should be possible especially for large enough N (and $\mathcal{V}$). This assumption is also needed for the work function $\phi_{\mathcal{V}}$, where energy differences corresponding to different electron numbers are replaced by differential quotients. The general expressions are applied to special cases (special geometries): Sphere (Section 3), spherical void (obtained from a spherical shell, Section 4), planar slab (obtained from a spherical shell, Section 5; obtained from a finite cylinder, Section 6), straight wire (obtained from a finite cylinder, Section 6). Only such cases (electron numbers) are considered, which lead to potentials $\varphi_{\mathcal{V}}(\vec{r})$, possessing the corresponding (spherical, planar or cylindrical) symmetry; such N creating in the potential additional (e.g. angular) dependence are excluded. In Section 7 the semi-infinite jellium is obtained from appropriate limits of the sphere, void, slab or wire. All these latter limits are taken under the constraint of constant background density n. The limiting cases, considered in Section 4, 5, 6, 7 and Appendix 2, are treated like an analysis using physical arguments. Section 8 contains expressions for the work function of a wire and a slab. Finally, in Section 9 the virial theorems for the surface energies of a sphere, a void, a wire, a slab and for the edge energies of a cylinder, a double edge, a wire end, and a 90°-edge are presented.

2. General considerations

A system of N electrons is considered, bounded by a positive background, being homogeneous within a finite volume $\mathcal{V}$ (characterized by linear parameters $L_1, L_2, \ldots$) and zero outside. Thus the background density is given by $\rho_{\mathcal{V}}(\vec{r}) = n\theta_{\mathcal{V}}(\vec{r})$ with $n = N/\mathcal{V}$. In the groundstate the electrons are distributed according to $n_{\mathcal{V}}(\vec{r})$. The total density (including a factor $4\pi\epsilon^2$ for simplicity, but in difference to I and II) is denoted by $\nu_{\mathcal{V}}(\vec{r}) \equiv 4\pi\epsilon^2[\rho_{\mathcal{V}}(\vec{r}) - n_{\mathcal{V}}(\vec{r})]$. The groundstate energy $E_{\mathcal{V}} = \bar{H}_{\mathcal{V}}$ splits into the expectation values of kinetic and potential energy: $E_{\mathcal{V}} = \bar{T}_{\mathcal{V}} + \bar{V}_{\mathcal{V}}$. All the mentioned quantities depend on $L_1, L_2, \ldots$ (explicitly and symbolically marked by the index $\mathcal{V}$) and on n (*not explicitly marked*).

The *Virial Theorem* (*VT*) connects $\bar{T}_{\mathcal{V}}$, $\bar{V}_{\mathcal{V}}$ and $E_{\mathcal{V}}$ with each other by

$$2\bar{T}_{\mathcal{V}} + \bar{V}_{\mathcal{V}} = -\sum_i \left(L_i \frac{\partial}{\partial L_i}\right)_N E_{\mathcal{V}} \tag{2.1}$$

(see I or Ziesche 83).

The terms on the r.h.s. of (2.1) can be written (for large enough N and $\mathcal{V}$) as

$$-\left(L_i \frac{\partial}{\partial L_i}\right)_N E_{\mathcal{V}} = \left[L_i \frac{\partial \ln \mathcal{V}}{\partial L_i} n \frac{\partial}{\partial n} - \left(L_i \frac{\partial}{\partial L_i}\right)_n\right] E_{\mathcal{V}}. \tag{2.2}$$

$\partial/\partial n$ is taken for constant $L_1, L_2, \ldots$. On the other hand the detailed Pauli-Hellmann-Feynman Theorem (PHFT) with respect to one parameter L_i allows to express the l.h.s. of (2.2) by

$$-\left(L_i \frac{\partial}{\partial L_i}\right)_N E_{\mathcal{V}} = -\overline{\left(L_i \frac{\partial H_{\mathcal{V}}}{\partial L_i}\right)_N}. \tag{2.3}$$

The differentiation acts only on the potential energy part of $H_{\mathcal{V}}$ and yields

$$-\overline{\left(L_i \frac{\partial H_{\mathcal{V}}}{\partial L_i}\right)_N} = 3N \int d^3 r \mu^i_{\mathcal{V}}(\vec{r}) \varphi_{\mathcal{V}}(\vec{r}) \tag{2.4}$$

with the abbreviations

$$\mu^i_{\mathcal{V}}(\vec{r}) = -\left(L_i \frac{\partial}{\partial L_i}\right)_N \frac{\theta_{\mathcal{V}}(\vec{r})}{3\mathcal{V}}, \tag{2.5}$$

$$\varphi_{\mathcal{V}}(\vec{r}) = \int \frac{d^3 r' \nu_{\mathcal{V}}(\vec{r}')}{4\pi |\vec{r} - \vec{r}'|}. \tag{2.6}$$

The r.h.s. of (2.4) looks like the electrostatic interaction energy between the real distribution $\nu_{\mathcal{V}}(\vec{r})$ of the electrons and the background, producing the electrostatic potential $\varphi_{\mathcal{V}}(\vec{r})$, and a fictive distribution $\mu^i_{\mathcal{V}}(\vec{r})$, arising from the constructions of the PHFT (Lehmann and Ziesche 83; in this paper $\mu_{\mathcal{V}}(\vec{r})$ is defined with an opposite sign). The real distribution $\nu_{\mathcal{V}}(\vec{r})$ represents a dipole layer near the background boundary according to the spilled out electrons, its total amount is zero (neutrality of the whole system): $\int d^3 r \nu_{\mathcal{V}}(\vec{r}) = 4\pi\epsilon^2(n\mathcal{V} - N) = 0$. Also the total amount of the fictive distribution $\mu^i_{\mathcal{V}}(\vec{r})$ is zero: $\int d^3 r \mu^i_{\mathcal{V}}(\vec{r}) = -(L_i \partial/\partial L_i)_N \mathcal{V}/3\mathcal{V} = 0$. $\mu^i_{\mathcal{V}}(\vec{r})$ consists of a positive volume part and a compensating negative surface part:

$$\mu^i_{\mathcal{V}}(\vec{r}) = \left[\frac{1}{3} L_i \frac{\partial \ln \mathcal{V}}{\partial L_i} \frac{\theta_{\mathcal{V}}(\vec{r})}{\mathcal{V}} - \frac{1}{3\mathcal{V}} L_i \frac{\partial}{\partial L_i} \theta_{\mathcal{V}}(\vec{r})\right]. \tag{2.7}$$

Thus the r.h.s. of (2.4) takes the form of a difference between the volume mean value $\bar{\varphi}^{\mathcal{V}}_{\mathcal{V}}$ and a certain surface mean value $\bar{\varphi}^{\mathcal{A}}_{\mathcal{V}}$. Together with (2.2 and 3) the *detailed PHFT's* result as

$$\left[L_i \frac{\partial \ln \mathcal{V}}{\partial L_i} n \frac{\partial}{\partial n} - \left(L_i \frac{\partial}{\partial L_i}\right)_n\right] E_{\mathcal{V}} = 3N\left(\frac{1}{3} L_i \frac{\partial \ln \mathcal{V}}{\partial L_i} \bar{\varphi}^{\mathcal{V}}_{\mathcal{V}} - \bar{\varphi}^{\mathcal{A}}_{\mathcal{V}}\right). \tag{2.8}$$

While (2.1) represents one theorem, (2.8) represents a collection of as much theorems as linear parameters L_i $(i = 1, 2, \ldots)$ exist in the considered case.

For the VT (2.1) the *total PHFT* arising from (2.8) by summing over all i is needed:

$$\left[3n \frac{\partial}{\partial n} - \sum_i \left(L_i \frac{\partial}{\partial L_i}\right)_n\right] E_{\mathcal{V}} = 3N(\bar{\varphi}^{\mathcal{V}}_{\mathcal{V}} - \bar{\varphi}^{\mathcal{A}}_{\mathcal{V}}), \tag{2.9}$$

where $\sum_i L_i \partial \mathcal{V}/\partial L_i = 3\mathcal{V}$ is used and

$$\bar{\varphi}_{\mathcal{V}}^{\mathcal{A}} \equiv \sum_i \bar{\varphi}_{\mathcal{V}}^{\mathcal{A}_i} = \oiint_{\mathcal{A}} \frac{\vec{df}\,\vec{r}}{3\mathcal{V}} \varphi_{\mathcal{V}}(\vec{r}) \tag{2.10}$$

($\mathcal{A}$ means the surface of $\mathcal{V}$). (2.10) is a consequence of summing (2.7) over all i:

$$\mu_{\mathcal{V}}(\vec{r}) \equiv \sum_i \mu_{\mathcal{V}}^i(\vec{r}) = \frac{\theta_{\mathcal{V}}(\vec{r})}{\mathcal{V}} + \frac{1}{3\mathcal{V}} \vec{r} \frac{\partial}{\partial \vec{r}} \theta_{\mathcal{V}}(\vec{r}). \tag{2.11}$$

Because $\theta_{\mathcal{V}}(\vec{r})$ is dimensionless, the L_i are combined with $\vec{r}/L_i$. This implies $-L_i\, \partial/\partial L_i = (\vec{r}\, \partial/\partial \vec{r})_i$ with $\sum_i (\vec{r}\, \partial/\partial \vec{r})_i = \vec{r}\, \partial/\partial \vec{r}$. Now $d^3r\, \partial\theta_{\mathcal{V}}(\vec{r})/\partial \vec{r}$ is non-zero only along the surface $\mathcal{A}$ and equals there $-\vec{df}$.

The detailed PHFT's (2.8) and the total PHFT (2.9) are generalized Budd-Vannimenus Theorems (BVT), they connect derivatives of the groundstate energy $E_{\mathcal{V}}$ with certain mean values of the potential $\varphi_{\mathcal{V}}(\vec{r})$. For equivalent forms of the r.h.s. of (2.8 and 9) see Appendix 1.

The r.h.s. of (2.1) is essentially the *pressure*, with which electrons act on the boundary of the background:

$$3\mathcal{V} p_{\mathcal{V}} \equiv -\sum_i \left(L_i \frac{\partial}{\partial L_i}\right)_N E_{\mathcal{V}} \quad \text{or} \quad p_{\mathcal{V}} = n(\bar{\varphi}_{\mathcal{V}}^{\mathcal{V}} - \bar{\varphi}_{\mathcal{V}}^{\mathcal{A}}). \tag{2.12}$$

Zero pressure $p_{\mathcal{V}} = 0$ determines the equilibrium background density $n_{0,L_1,L_2,\ldots}$.

Another quantity of interest is the *work function* $\phi_{\mathcal{V}}$. As shown in II it can be expressed (for large enough N and $\mathcal{V}$) by

$$\phi_{\mathcal{V}} = -\varepsilon_{\mathcal{V}} - \frac{1}{3} \sum_i \left(L_i \frac{\partial}{\partial L_i}\right)_n \varepsilon_{\mathcal{V}} + \bar{\varphi}_{\mathcal{V}}^{\mathcal{A}} - \varphi_{\mathcal{V}}(\infty) \tag{2.13}$$

with $\varepsilon_{\mathcal{V}} \equiv E_{\mathcal{V}}/N$. But for completely finite systems (as e.g. a jellium sphere) the replacement of the energy difference $E_{\mathcal{V},N}(n) - E_{\mathcal{V},N-1}(n)$ by the differential quotient $(\partial E_{\mathcal{V},N}(n)/\partial N)_{\mathcal{V},n} = \mu_{\mathcal{V}}$, which is involved in (2.13), seems to be the less justified the smaller the system is (Snider, Sorbello 83b). Probably (2.13) is useful only for such extended jellia as a planar slab or a straight wire (see Section 8).

In the following special cases will be considered in detail. For this purpose it is useful to split $E_{\mathcal{V}}$ into parts introducing the bulk energy ε by

$$E_{\mathcal{V}} = N\varepsilon_{\mathcal{V}} = N\varepsilon + \ldots, \qquad \varepsilon = \lim_{\substack{N,\mathcal{V}\to\infty \\ n=\text{const}}} \varepsilon_{\mathcal{V}}. \tag{2.14}$$

as well as surface, edge and corner energies (indicated by the dots and appropriately defined). Then from the detailed PHFT's (2.8) special theorems can be derived for these energies.

3. Jellium sphere

In this simple case only one linear parameter exists, the radius R. Along the line of (2.14)

$$E_R = N\varepsilon + 4\pi R^2 \sigma_R \tag{3.1}$$

defines the surface energy of a jellium sphere, σ_R, as a function of R and n. Then (2.8) specializes to

$$n^2 \frac{d}{dn} \varepsilon + \frac{1}{R}\left(3n\frac{\partial}{\partial n} - R\frac{\partial}{\partial R} - 2\right)\sigma_R = n(\bar{\varphi}_R^R - \varphi_R) \tag{3.2}$$

with

$$\bar{\varphi}_R^R \equiv \int_0^R d\left(\frac{r}{R}\right)^3 \varphi_R(r), \qquad \varphi_R \equiv \varphi_R(R). \tag{3.3a,b}$$

In view of the limit $R \to \infty$ (and $n = \text{const}$) the potential $\varphi_R(r)$ is chosen to be zero deep inside the jellium: $\varphi_R(0) = 0$. In this limit for finite values r an extended homogeneous jellium (characterized by the bulk energy ε) arises and with $\bar{\varphi}_R^R \to 0$, $\varphi_R \to \varphi$ the equation (3.2) turns into the bulk theorem

$$n\frac{d}{dn}\varepsilon = -\varphi. \tag{3.4}$$

Here φ means the potential at the semi-infinite jellium surface. (3.4) subtracted from (3.2) yields the *spherical surface theorem*

$$\left(3n\frac{\partial}{\partial n} - R\frac{\partial}{\partial R} - 2\right)\sigma_R = nR(\bar{\varphi}_R^R - \varphi_R + \varphi). \tag{3.5}$$

It relates σ_R and its derivatives to certain potential quantities.

According to (2.12) the pressure is given by $p_R = n(\bar{\varphi}_R^R - \varphi_R)$, approaching $p = -n\varphi$ for $R \to \infty$. Thus the r.h.s. of (3.5) equals $R(p_R - p)$.

4. Spherical shell and void

In this case two linear parameters $R_1 < R_2$ exist. It is $\mathcal{V} = 4\pi(R_2^3 - R_1^3)/3$, thus $R_i\, \partial\mathcal{V}/\partial R_i = \mp 4\pi R_i^3$ and $-R_i(\partial n/\partial R_i)_N = \mp 3nR_i^3/(R_2^3 - R_1^3)$ for $i = 1, 2$. It is useful to introduce a 'neutrality radius' R between R_1 and R_2 by $\int_0^R d^3r\nu_{R_1,R_2}(r) = 0$, this means for the electrical field: $E_{R_1,R_2}(R) = 0$. Thus the jellium shell consists of two subshells $\mathcal{V}_1 = 4\pi(R^3 - R_1^3)/3$ and $\mathcal{V}_2 = 4\pi(R_2^3 - R^3)/3$ with $\mathcal{V}_1 + \mathcal{V}_2 = \mathcal{V}$. R depends on R_1, R_2 and n. In the limit $R_1 \to 0$ (and following from this $R \to 0$) the shell simplifies itself to a sphere with radius R_2. In the limit $R_2 \to \infty$ a spherical void with radius R_1 in an otherwise homogeneous jellium arises.

With ε and σ_R defined in (2.14) and (3.1), respectively, via

$$E_{R_1,R_2} = N\varepsilon + 4\pi R_2^2 \sigma_{R_2} + 4\pi R_1^2 \sigma_{R_1,R_2}^v \tag{4.1}$$

a surface energy σ_{R_1,R_2}^v is introduced, characterizing the inner surface and its interaction with the outer one. Then (2.8) together with (3.4) yields for $i = 1, 2$

$$\begin{aligned} R_2^2\left(\frac{\mp R_i^3}{R_2^3 - R_1^3} 3n\frac{\partial}{\partial n} - R_i\frac{\partial}{\partial R_i} - 2\cdot\delta_{i,2}\right)\sigma_{R_2} \\ + R_1^2\left(\frac{\mp R_i^3}{R_2^3 - R_1^3} 3n\frac{\partial}{\partial n} - R_i\frac{\partial}{\partial R_i} - 2\cdot\delta_{i,1}\right)\sigma_{R_1,R_2}^v \\ = \mp R_i^3 n(\bar{\varphi}_{R_1,R_2}^{R_1,R_2} - \varphi_{R_1,R_2}^i + \varphi), \end{aligned} \tag{4.2a,b}$$

where

$$\bar{\varphi}^{R_1,R_2}_{R_1,R_2} \equiv \int_{R_1}^{R_2} \frac{dr^3}{R_2^3 - R_1^3} \varphi_{R_1,R_2}(r), \qquad \varphi^{i}_{R_1,R_2} \equiv \varphi_{R_1,R_2}(R_i). \tag{4.3a,b}$$

'Deep inside' means for a spherical shell $r = R$, hence the potential is normalized as $\varphi_{R_1,R_2}(R) = 0$.

Considering (4.2 and 3) for $i = 1$ in the limit $R_2 \to \infty$ a *void theorem* (theorem for the surface energy of a jellium void)

$$\left(-R_1 \frac{\partial}{\partial R_1} - 2\right)\sigma^{v}_{R_1} = nR_1(\varphi^{v}_{R_1} - \varphi) \tag{4.4}$$

arises with $\sigma^{v}_{R_1,R_2} \to \sigma^{v}_{R_1}$ and $\varphi_{R_1,R_2}(r) \to \varphi^{v}_{R_1}(r)$. The first term in (4.3a) vanishes. Void calculations performed e.g. by Robinson and De Chatel (75) or Gyémánt and Solt (77) can be used to discuss (4.4), the R_1- and n-dependence of $\sigma^{v}_{R_1}$ is sketched in Fig. 1.

If one adds (4.2a) to (4.2b) and uses (3.5) for the radius R_2, then

$$\begin{aligned}&\left(3n\frac{\partial}{\partial n} - R_1\frac{\partial}{\partial R_1} - R_2\frac{\partial}{\partial R_2} - 2\right)\sigma^{v}_{R_1,R_2}\\ &= nR_1\left[\left(\frac{R_2}{R_1}\right)^3(\bar{\varphi}^{R_1,R_2}_{R_1,R_2} - \varphi^{2}_{R_1,R_2}) - (\bar{\varphi}^{R_1,R_2}_{R_1,R_2} - \varphi^{1}_{R_1,R_2} + \varphi) - \left(\frac{R_2}{R_1}\right)^3(\bar{\varphi}^{R_2}_{R_2} - \varphi_{R_2})\right]\end{aligned} \tag{4.5}$$

results. Inspection of the r.h.s. leads to

$$\begin{aligned}nR_1\Bigg[&(\varphi^{1}_{R_1,R_2} - \varphi) + \int_{R_1}^{R_2} d\left(\frac{r}{R_1}\right)^3 [\varphi_{R_1,R_2}(r) - \varphi_{R_2}(r)]\\ &- \int_0^{R_1} d\left(\frac{r}{R_1}\right)^3 \varphi_{R_2}(r) - \left(\frac{R_2}{R_1}\right)^3(\varphi^{2}_{R_1,R_2} - \varphi_{R_2})\Bigg].\end{aligned}$$

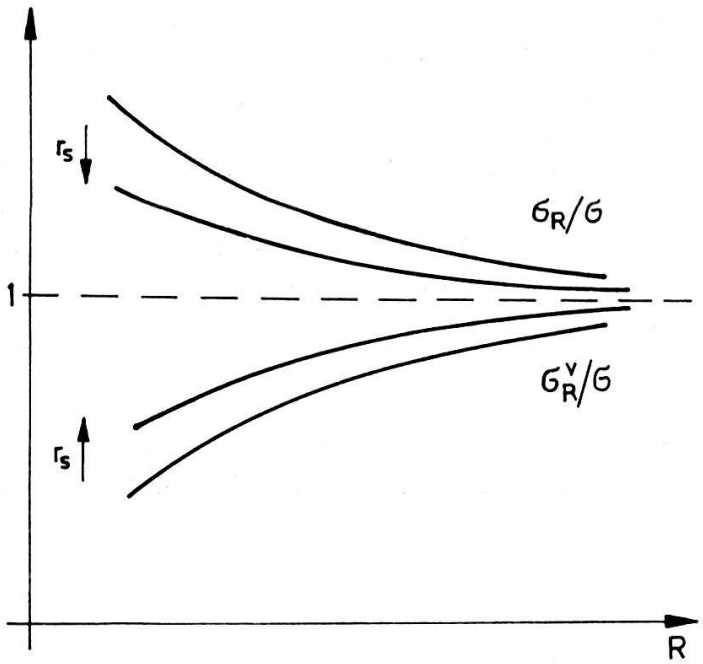

Figure 1
Surface energy of a jellium sphere (σ_R) and void (σ^{v}_{R}). Dependence of the sphere or void radius R and the background density parameter r_s, qualitatively.

In the limit $R_2 \to \infty$ the first term reproduces the r.h.s. of (4.4). Thus (4.5) turns into a further theorem. If one subtracts (4.4) from this theorem, then

$$3n \frac{\partial}{\partial n} \sigma^{\upsilon}_{R_1} = n\left[R_1 \int_{R_1}^{\infty} d\left(\frac{r}{R_1}\right)^3 \varphi^{\upsilon}_{R_1}(r) - \delta^{\upsilon}_{R_1}\right], \tag{4.6a}$$

$$\delta^{\upsilon}_{R_1} \equiv R_1 \left\{ \int_{R_1}^{R_2} d\left(\frac{r}{R_1}\right)^3 [\varphi^{\upsilon}_{R_1}(r) + \varphi_{R_2}(r) - \varphi_{R_1,R_2}(r)] + \left(\frac{R_2}{R_1}\right)^3 (\varphi^2_{R_1,R_2} - \varphi_{R_2}) \right\}_{R_2 \to \infty} \tag{4.6b}$$

is obtained as another *void theorem*.

Via

$$\varepsilon^{\upsilon}_{R_1} \equiv \frac{1}{N_1} \lim_{R_2 \to \infty} (E_{R_1,R_2} - E_{R_2}), \qquad N_1 \equiv n \frac{4\pi}{3} R_1^3 \tag{4.7}$$

a void energy per particle is introduced. Its connection with the void surface energy follows from (4.1): $\varepsilon^{\upsilon}_{R_1} = -\varepsilon + 3\sigma^{\upsilon}_{R_1}/R_1 n$. With (4.4, 6a) and (3.4) a theorem for $\varepsilon^{\upsilon}_{R_1}$ arises,

$$-\left(R_1 \frac{\partial}{\partial R_1}\right)_{N_1} \varepsilon^{\upsilon}_{R_1} = 3\left[\int_{R_1}^{\infty} d\left(\frac{r}{R_1}\right)^3 \varphi^{\upsilon}_{R_1}(r) + \varphi^{\upsilon}_{R_1} - \delta^{\upsilon}_{R_1}\right], \tag{4.8}$$

which agrees with a theorem given by Finnis and Nieminen (77) for the formation energy of a vacancy, supposing $\delta^{\upsilon}_{R_1} = 0$. The connection of $\sigma^{\upsilon}_{R_1}$ with the formation energy is the following one: We start with a sphere (R_2), create around the centre a spherical void (R_1) and add the back ground taken away from the middle beyond the outer surface, i.e. we increase R_2 by ΔR_2, the latter quantity determined by $(R_2 + \Delta R_2)^3 = R_1^3 + R_2^3$, from which $\Delta R_2/R_2 \approx (R_1/R_2)^3/3$ follows. With (3.1) and (4.1) the energy difference is given by

$$\begin{aligned} \Delta E_{R_1,R_2} &= E_{R_1,R_2+\Delta R_2} - E_{R_2} \\ &= 4\pi R_1^2 \sigma_{R_1,R_2+\Delta R_2} + 4\pi (R_2 + \Delta R_2)^2 \sigma_{R_2+\Delta R_2} - 4\pi R_2^2 \sigma_{R_2}. \end{aligned} \tag{4.9}$$

Divided by the void surface $4\pi R_1^2$ this yields in the limit $R_2 \to \infty$

$$\left(\frac{\Delta E_{R_1,R_2}}{4\pi R_1^2}\right)_{R_2 \to \infty} = \sigma^{\upsilon}_{R_1} + \frac{R_1}{3}\left(\frac{\partial}{\partial R_2} \sigma_{R_2}\right)_{\substack{n = \text{const} \\ R_2 \to \infty}}. \tag{4.10}$$

The second term on the r.h.s. vanishes, thus $\sigma^{\upsilon}_{R_1}$ is the void formation energy per void area.

5. Spherical shell and planar slab

Starting with a spherical shell a planar jellium slab develops for finite $r - R$ in the limit R_1, $R_2 \to \infty$ but $R_2 - R_1 = \text{const}$. To obtain this, via

$$E_{R_1,R_2} = N\varepsilon + 4\pi (R_1^2 + R_2^2) \sigma_{R_1,R_2} \tag{5.1}$$

a surface energy σ_{R_1,R_2} is introduced, which is characteristic for both surfaces 1, 2

and their interaction. Now (2.8) together with (3.4) yields for $i=1,2$

$$\left(\frac{\mp R_i^3}{R_2^3-R_1^3}\,3n\frac{\partial}{\partial n}-R_i\frac{\partial}{\partial R_i}-2\frac{R_i^2}{R_1^2+R_2^2}\right)\sigma_{R_1,R_2}$$
$$=\frac{\mp R_i^2}{R_1^2+R_2^2}\,nR_i(\bar{\varphi}^{R_1,R_2}_{R_1,R_2}-\varphi^i_{R_1,R_2}+\varphi). \quad (5.2)$$

For the definition of $\bar{\varphi}^{R_1,R_2}_{R_1,R_2}$ and $\varphi^i_{R_1,R_2}$ see (4.3).

Instead of R_1 and R_2 we now use $L\equiv(L_1+L_2)/2$ and R, with $L_1\equiv R-R_1$ and $L_2\equiv R_2-R$, hence $L=(R_2-R_1)/2$: $\sigma_{R_1,R_2}=\sigma_{L,R}$, $\varphi^i_{R_1,R_2}=\varphi^i_{L,R}$ etc. In the planar slab limit $R\to\infty$, $L=\text{const}$ it is expected $L_1\to L$ and $L_2\to L$, hence

$$\frac{R_i^3}{R_2^3-R_1^3}\to\frac{1}{2}\left(\frac{1}{3}\frac{R}{L}\mp 1\right),\qquad \frac{R_i^2}{R_1^2+R_2^2}\to\frac{1}{2}\left(1\mp 2\frac{L}{R}\right)\quad\text{for}\quad i=\begin{cases}1\\2\end{cases} \quad (5.3)$$

and

$$R_i\frac{\partial}{\partial R_i}\to\mp\frac{1}{2}(R\mp L)\frac{\partial}{\partial L}\quad\text{for}\quad i=\begin{cases}1\\2\end{cases}. \quad (5.4)$$

With $\sigma_{L,R}\to\sigma_L+\sigma'_L/R$ (5.2) takes the form (concerning the r.h.s. see (A2.35 . . . 38))

$$\left[\frac{R}{L}\left(n\frac{\partial}{\partial n}-L\frac{\partial}{\partial L}\right)\mp\left(3n\frac{\partial}{\partial n}-L\frac{\partial}{\partial L}-2\right)\right]\left(\sigma_L+\frac{1}{R}\sigma'_L\right)$$
$$=\left(1\mp 2\frac{L}{R}\right)n\left[\left(\frac{R}{L}\mp 3\right)L\bar{\varphi}^L_L-\left(\frac{R}{L}\mp 1\right)L(\varphi_L-\varphi)\pm 2\beta^i_L+\beta''_L\right]\quad\text{for}\quad i=\begin{cases}1\\2\end{cases} \quad (5.5)$$

with

$$\varphi_{L,R}(R\mp z)=\varphi^i_{L,R}(z)\to\varphi_L(z), \quad (5.6)$$

$$\bar{\varphi}^L_L\equiv\int_0^L d\frac{z}{L}\,\varphi_L(z),\qquad \varphi_L\equiv\varphi_L(L), \quad (5.7a,b)$$

$$\beta^i_L\equiv\mp\left\{\frac{R}{2}\left[\int_0^{L_i}dz\nu^i_{L,R}(z)(z-L_i)-\int_0^L dz\nu_L(z)(z-L)\right]\right\}_{R\to\infty}\quad\text{for}\quad i=\begin{cases}1\\2\end{cases}, \quad (5.8a)$$

$$\beta''_L\equiv-\frac{1}{L}\left\{\frac{R}{2}\left[\sum_{i=1}^{2}\int_0^{L_i}dz\nu^i_{L,R}(z)\frac{1}{2}(z-L_i)^2-2\int_0^L dz\nu_L(z)\frac{1}{2}(z-L)^2\right]\right\}_{R\to\infty}. \quad (5.8b)$$

$\varphi_L(z)$ is the potential produced by the total (electron and background) distribution $\nu_L(z)$ of the slab. The right and left jellium surface is situated at $z=\pm L$, respectively. Now the whole r.h.s. of (5.5) is given by

$$n\left\{\frac{R}{L}L[\bar{\varphi}^L_L-\varphi_L+\varphi]\mp[5L\bar{\varphi}^L_L-3L(\varphi_L-\varphi)-2\beta^i_L\mp\beta''_L]\right\}\quad\text{for}\quad i=\begin{cases}1\\2\end{cases}. \quad (5.9)$$

Comparison of (5.5 and 9) term by term leads to

$$\left(n\frac{\partial}{\partial n}-L\frac{\partial}{\partial L}\right)\sigma_L = nL(\bar{\varphi}_L^L-\varphi_L+\varphi), \tag{5.10}$$

$$\left(3n\frac{\partial}{\partial n}-L\frac{\partial}{\partial L}-2\right)\sigma_L \mp \frac{1}{L}\left(n\frac{\partial}{\partial n}-L\frac{\partial}{\partial L}\right)\sigma'_L$$

$$= n[5L\bar{\varphi}_L^L-3L(\varphi_L-\varphi)-2\beta_L^i \mp \beta''_L] \quad \text{for} \quad i=\begin{cases}1\\2\end{cases}. \tag{5.11}$$

Addition and subtraction of the latter two equations for $i=1$ and 2 yield with $\beta_L \equiv (\beta_L^1+\beta_L^2)/2$ and $\beta'_L \equiv \beta_L^1-\beta_L^2$

$$\left(3n\frac{\partial}{\partial n}-L\frac{\partial}{\partial L}-2\right)\sigma_L = n[5L\bar{\varphi}_L^L-3L(\varphi_L-\varphi)-2\beta_L], \tag{5.12}$$

$$\frac{1}{L}\left(n\frac{\partial}{\partial n}-L\frac{\partial}{\partial L}\right)\sigma'_L = n(\beta'_L+\beta''_L). \tag{5.13}$$

(5.10 and 12) allow to eliminate $n\,\partial\sigma_L/\partial n$ or $L\,\partial\sigma_L/\partial L$:

$$\left(L\frac{\partial}{\partial L}-1\right)\sigma_L = n(L\bar{\varphi}_L^L-\beta_L), \tag{5.14}$$

$$\left(n\frac{\partial}{\partial n}-1\right)\sigma_L = n(2L\bar{\varphi}_L^L-\beta_L-\gamma_L), \tag{5.15a}$$

$$\gamma_L \equiv L(\varphi_L-\varphi). \tag{5.15b}$$

(5.10 and 12) or (5.14 and 15) *are planar slab theorems* (theorems for the surface energy of a planar jellium slab). (5.10) is the planar analog to (3.5).

6. Finite cylinder, straight wire and planar slab

Now a jellium cylinder with radius A and length $2L$ is considered. The volume $\mathcal{V}=\pi A^2\cdot 2L$, the total surface $\mathcal{A}=2\cdot\pi A^2+2\pi A\cdot 2L$, the total edge length is $2\cdot 2\pi A$. The z-axis is chosen along the cylinder axis, the perpendicular coordinate is denoted by $a(\equiv\sqrt{x^2+y^2})$. The background density is given by $\rho_{A,L}(a,z)=n\theta(A-a)\theta(L-|z|)$. In the limit $A\to\infty$ a planar slab of thickness $2L$ arises for finite values of a, for finite values of $t=a-A$ a semi-infinite slab (double edge) occurs. In the limit $L\to\infty$ an extended cylinder or straight wire with radius A is realized for finite z, for finite $s=z-L$ a semi-infinite wire (wire end) is present. In the limit $R\to\infty$ and $L\to\infty$ for finite *s or t* semi-infinite jellia appear, for finite *s and t* a 'quarter-infinite' jellium (90° edge) develops. (See Fig. 2.)

Starting with the total groundstate energy of a finite jellium cylinder, $E_{A,L}$, via

$$2\sigma_L \equiv \left(\frac{E_{A,L}-N\varepsilon}{\pi A^2}\right)_{A\to\infty} = \left(\frac{E_{A,L}}{\pi A^2}\right)_{A\to\infty} - 2\,\mathrm{Ln}\,\varepsilon \tag{6.1}$$

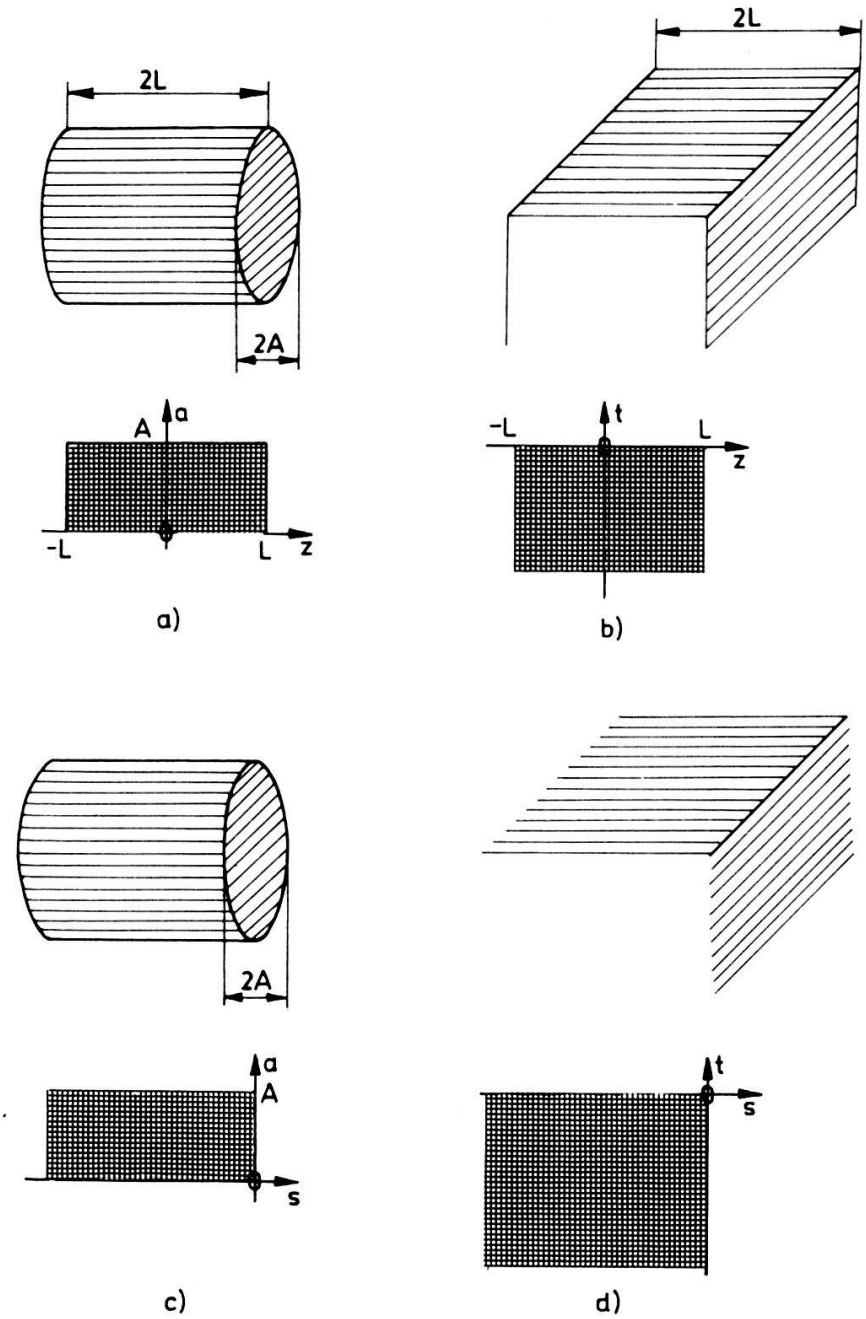

Figure 2
a) Finite jellium cylinder (A, L), b) semi-infinite slab or double edge (L), c) semi-infinite wire or wire end (A), d) 'quarter-infinite' jellium or 90° edge.

the surface energy of a planar slab, σ_L, is defined. On the other hand

$$2\pi A\sigma_A \equiv \left(\frac{E_{A,L}-N\varepsilon}{2L}\right)_{L\to\infty} = \left(\frac{E_{A,L}}{2L}\right)_{L\to\infty} - \pi A^2 n\varepsilon \tag{6.2}$$

defines the surface energy of an extended cylinder, σ_A. The total energy per area of a planar slab is given by $\varepsilon_L = 2\,\mathrm{Ln}\,\varepsilon + 2\sigma_L$, the total energy per length of a straight wire is given by $\varepsilon_A = \pi A^2 n\varepsilon + 2\pi A\sigma_A$. Finally, via

$$E_{A,L} = N\varepsilon + 2\cdot\pi A^2\sigma_L + 2L\cdot 2\pi A\sigma_A + 2\cdot 2\pi A\kappa_{A,L} \tag{6.3}$$

the edge energy of a finite jellium cylinder, $\kappa_{A,L}$, is defined. For $A \to \infty$ it is $\kappa_{A,L} \to \kappa_L$, this describes the edge energy of a double edge. For $L \to \infty$ it is $\kappa_{A,L} \to \kappa_A$, this characterizes the edge energy of a wire end. For $A \to \infty$ and $L \to \infty$ it is $\kappa_{A,L} \to \kappa$, also $\kappa_L \to \kappa$ and $\kappa_A \to \kappa$, where κ means the edge energy of a 90° jellium edge.

If (2.8) is applied to (6.3) it yields with (3.4) the following expressions: Differentiation with respect to A leads to

$$\frac{1}{2L}\left(2n\frac{\partial}{\partial n}-2\right)\sigma_L+\frac{1}{A}\left(2n\frac{\partial}{\partial n}-A\frac{\partial}{\partial A}-1\right)\sigma_A + \frac{1}{AL}\left(2n\frac{\partial}{\partial n}-A\frac{\partial}{\partial A}-1\right)\kappa_{A,L}=n(\bar{\varphi}^{A,L}_{A,L}-\overline{\varphi^1_{A,L}}^{L}+\varphi), \quad (6.4)$$

differentiation with respect to L leads to

$$\frac{1}{L}\left(n\frac{\partial}{\partial n}-L\frac{\partial}{\partial L}\right)\sigma_L+\frac{2}{A}\left(n\frac{\partial}{\partial n}-1\right)\sigma_A + \frac{2}{AL}\left(n\frac{\partial}{\partial n}-L\frac{\partial}{\partial L}\right)\kappa_{A,L}=n(\bar{\varphi}^{A,L}_{A,L}-\overline{\varphi^2_{A,L}}^{A}+\varphi). \quad (6.5)$$

The quantities on the r.h.s. of (6.4 and 5) are defined as follows:

$$\bar{\varphi}^{A,L}_{A,L} \equiv \int_0^A d\left(\frac{a}{A}\right)^2 \int_0^L d\frac{z}{L}\,\varphi_{A,L}(a,z), \quad (6.6)$$

$$\overline{\varphi^1_{A,L}}^{L} \equiv \int_0^L d\frac{z}{L}\,\varphi^1_{A,L}(z), \qquad \varphi^1_{A,L}(z)\equiv\varphi_{A,L}(A,z), \quad (6.7a,b)$$

$$\overline{\varphi^2_{A,L}}^{A} \equiv \int_0^A d\left(\frac{a}{A}\right)^2 \varphi^2_{A,L}(a), \qquad \varphi^2_{A,L}(a)\equiv\varphi_{A,L}(a,L). \quad (6.8a,b)$$

The aim is, to obtain 'pure' theorems for $\sigma_L, \sigma_A, \kappa_{A,L}$ separately instead of the 'mixed' theorems (6.4 and 5). To this purpose we use

$$\overline{\varphi_{A,L}(a,z)}^{A} \to \varphi_L(z) \quad \text{for} \quad A\to\infty, \quad \overline{\varphi_{A,L}(a,z)}^{L} \to \varphi_A(a) \quad \text{for} \quad L\to\infty,$$

and

$$\bar{\varphi}^L_L \equiv \int_0^L d\frac{z}{L}\,\varphi_L(z), \qquad \bar{\varphi}^A_A \equiv \int_0^R d\left(\frac{a}{A}\right)^2 \varphi_A(a),$$

$$\varphi_L \equiv \varphi_L(L), \qquad \varphi_A \equiv \varphi_A(A)$$

as abbreviations.

Now, by multiplying (6.4 and 5) with L and taking the limit $A \to \infty$ *planar slab theorems* are obtained:

$$\left(n\frac{\partial}{\partial n}-1\right)\sigma_L = nL(\bar{\varphi}^L_L-\overline{\varphi^1_L}^{L}+\varphi), \quad (6.9)$$

$$\left(n\frac{\partial}{\partial n}-L\frac{\partial}{\partial L}\right)\sigma_L = nL(\bar{\varphi}^L_L-\varphi_L+\varphi). \quad (6.10)$$

Straight wire theorems for σ_A arise from multiplying (6.4 and 5) with A and taking the limit $L \to \infty$

$$\left(2n\frac{\partial}{\partial n} - A\frac{\partial}{\partial A} - 1\right)\sigma_A = nA(\bar{\varphi}_A^A - \varphi_A + \varphi), \tag{6.11}$$

$$2\left(n\frac{\partial}{\partial n} - 1\right)\sigma_A = nA(\bar{\varphi}_A^A - \overline{\varphi_A^2}^A + \varphi). \tag{6.12}$$

Edge theorems for $\kappa_{A,L}$ follow from (6.4), inserting (6.9 and 11), or from (6.5), inserting (6.10 and 12):

$$\left(2n\frac{\partial}{\partial n} - A\frac{\partial}{\partial A} - 1\right)\kappa_{A,L} = nAL[\bar{\varphi}_{A,L}^{A,L} - \overline{\varphi_{A,L}^1}^L - (\bar{\varphi}_L^L - \overline{\varphi_L^1}^L) - (\bar{\varphi}_A^A - \varphi_A) - \varphi], \tag{6.13}$$

$$2\left(n\frac{\partial}{\partial n} - L\frac{\partial}{\partial L}\right)\kappa_{A,L} = nAL[\bar{\varphi}_{A,L}^{A,L} - \overline{\varphi_{A,L}^2}^A - (\bar{\varphi}_L^L - \varphi_L) - (\bar{\varphi}_A^A - \overline{\varphi_A^2}^A) - \varphi]. \tag{6.14}$$

Now the task remains, to specify the r.h.s.'s and to discuss all these theorems. This will be done partially in the following.

At first (6.10) agrees exactly with (5.10). The r.h.s. of (6.9) can be rewritten as

$$nL(\bar{\varphi}_L^L - \varphi_L + \varphi - \overline{\varphi_L^1(z) - \varphi_L^1(0)}^L - \varphi_L^1(0) + \varphi_L). \tag{6.15}$$

This together with (6.9) agrees with (5.15), supposed it is

$$-\int_0^L dz[\varphi_L^1(z) - \varphi_L^1(0)] - \gamma_L^1 = \int_0^L dz\varphi_L(z) - \beta_L \tag{6.16a}$$

$$\gamma_L^1 \equiv L(\varphi_L^1(0) - \varphi_L). \tag{6.16b}$$

On the l.h.s. because of $\varphi_L^1(z) = (\varphi_{A,L}(A, z))_{A\to\infty}$ the potential at the boundary of a double edge comes into being.

The straight wire theorems (6.11 and 12) are similarly treated. At first (6.11) is the cylindrical analog to (3.5) and (5.10). (6.12) can be rewritten as

$$\left(2n\frac{\partial}{\partial n} - 2\right)\sigma_A = nA(\bar{\varphi}_A^A - \varphi_A + \varphi - \overline{\varphi_A^2(a) - \varphi_A^2(0)}^A - \varphi_A^2(0) + \varphi_A). \tag{6.17}$$

If one subtracts (6.17) from (6.11), it follows

$$\left(-A\frac{\partial}{\partial A} + 1\right)\sigma_A = n(A\overline{\varphi_A^2(a) - \varphi_A^2(0)}^A + \gamma_A^2), \tag{6.18a}$$

$$\gamma_A^2 \equiv A(\varphi_A^2(0) - \varphi_A), \tag{6.18b}$$

being the cylindrical analog to (5.14) (in combination with (6.16)). On the r.h.s. because of $\varphi_A^2(a) = (\varphi_{A,L}(a, L))_{L\to\infty}$ the potential at the boundary of a wire end comes into being.

7. Semi-infinite jellium

Starting with a jellium sphere in the limit $R \to \infty$ at the surface, i.e. for finite $s \equiv r - R$ a semi-infinite jellium arises. This means, one should expect (including other starting geometries)

$$\sigma_R \to \sigma,\ \nu_R(R+s) \to \nu(s),\ \varphi_R(R+s) \to \varphi(s),\ \frac{R}{3}\bar{\nu}_R^R \to N^+,\ \frac{R}{3}\bar{\varphi}_R^R \to P,$$

$$\sigma_A \to \sigma,\ \nu_A(A+s) \to \nu(s),\ \varphi_A(A+s) \to \varphi(s),\ \frac{A}{2}\bar{\nu}_A^A \to N^+,\ \frac{A}{2}\bar{\varphi}_A^A \to P,$$

$$\sigma_L \to \sigma,\ \nu_L(L+s) \to \nu(s),\ \varphi_L(L+s) \to \varphi(s),\ L\bar{\nu}_L^L \to N^+,\ L\bar{\varphi}_L^L \to P$$

for a sphere in the limit $R \to \infty$, for a straight wire in the limit $A \to \infty$, and for a planar slab in the limit $L \to \infty$, respectively. The abbreviations

$$N^+ \equiv \int_{-\infty}^{0} ds\nu(s) \quad \text{and} \quad P \equiv \int_{-\infty}^{0} ds\varphi(s) \tag{7.0}$$

are introduced. The expressions $R\bar{\nu}_R^R/3$, $A\bar{\nu}_A^A/2$, $L\bar{\nu}_L^L$, and N^+ have in common, to represent the number of electrons inside the background region divided by the surface $4\pi R^2$ (sphere), $2L \cdot 2\pi A$ (wire with $L \to \infty$), and πA^2 (slab and semi-infinite jellium with $A \to \infty$) in each case. Analogously the expressions $R\bar{\varphi}_R^R/3$ etc. mean the volume integral of the potential inside the background per surface area. In the case of a void it is similarly $\sigma_{R_1}^{\upsilon} \to \sigma$, $\nu_{R_1}^{\upsilon}(R_1 - s) \to \nu(s)$, $\varphi_{R_1}^{\upsilon}(R_1 - s) \to \varphi(s)$ and

$$\frac{1}{4\pi R_1^2}\int_{R_1}^{\infty} d^3r\nu_{R_1}^{\upsilon}(r) \to N^+, \qquad \frac{1}{4\pi R_1^2}\int_{R_1}^{\infty} d^3r\varphi_{R_1}^{\upsilon}(r) \to P.$$

On these conditions the theorems (3.5), (4.4 and 6), (5.10, 12, 14 and 15), (6.10, 11 and 18) turn into theorems for the semi-infinite jellium. Comparing them with each other essentially two *semi-infinite jellium theorems* result

$$n\frac{d}{dn}\sigma - nP = -n\gamma^{\text{sla}}, \quad \gamma^{\text{sla}} \equiv \gamma_{L\to\infty} \text{ (see (5.15b))}, \tag{7.1}$$

$$\sigma + nP = n\beta^{\text{sla}}, \quad \beta^{\text{sla}} \equiv \beta_{L\to\infty} \text{ (see (5.8 and 12))} \tag{7.2}$$

together with several equivalent expressions for the r.h.s. of (7.1 and 2):

$$2\beta^{\text{sla}} + 3\gamma^{\text{sla}} = \alpha^{\text{sph}}, \qquad \alpha^{\text{sph}} \equiv \alpha_{R\to\infty} \text{ (see (A2.27b))}, \tag{7.3}$$

$$2\beta^{\text{sla}} = \alpha^{\upsilon}, \qquad \alpha^{\upsilon} \equiv \alpha_{R_1\to\infty}^{\upsilon} \text{ (see (A2.33b))}, \tag{7.4}$$

$$3\gamma^{\text{sla}} = \delta^{\upsilon}, \qquad \delta^{\upsilon} \equiv \delta_{R_1\to\infty}^{\upsilon} \text{ (see (4.6b))}, \tag{7.5}$$

$$\beta^{\text{sla}} + 2\gamma^{\text{sla}} = \beta^{w}, \qquad \beta^{w} \equiv \beta_{A\to\infty} \text{ (see (A2.18b))}, \tag{7.6}$$

$$\beta^{\text{sla}} = P + (\overline{L\varphi_L^1(z) - \varphi_L^1(0)}^{L} + \gamma_L^1)_{L\to\infty} \text{ (see (6.16))}, \tag{7.7}$$

$$\beta^{\text{sla}} = P + (\overline{A\varphi_A^2(a) - \varphi_A^2(0)}^{A} + \gamma_A^2)_{A\to\infty} \text{ (see (6.18))}. \tag{7.8}$$

(7.1 . . . 6) are proved in A2, (7.7) is the limit $L \to \infty$ of (6.16), (7.8) arises from (6.18) and (7.2).

Vannimenus and Budd (74) assume $\gamma^{\mathrm{sla}}=0$ (this implies also $\delta^{\mathrm{v}}=0$ according to (7.5)). This means, that φ_L approaches its asymptotic value φ faster than $1/L$ with increasing slab thickness L. A direct comparison of $d\sigma/dn$ and $P=\int_{-\infty}^{0} ds\varphi(s)$ using the Kohn-Sham calculations of Lang and Kohn (70) confirms this assumption. But it is till now an open question, whether $\gamma^{\mathrm{sla}}=0$ can be rigorously justified or holds only approximately. If $\gamma^{\mathrm{sla}}=0$ is true, then (7.1 ... 6) simply read as

$$\frac{d}{dn}\sigma=\int_{-\infty}^{0} ds\,\varphi(s) \tag{7.9}$$

$$2\left(1+n\frac{d}{dn}\right)\sigma=n\alpha^{\mathrm{sph}},\ \alpha^{\mathrm{sph}}=\alpha^{\mathrm{v}}=2\beta^{\mathrm{w}}=2\beta^{\mathrm{sla}}. \tag{7.10,11}$$

(7.11) together with (7.10) relates the surface energy of the semi-infinite jellium to the semi-infinite jellium limits of a sphere, a void, a wire and a slab (the latter is understood as an appropriate limit of a spherical shell). (6.16), (7.7 and 8) relate slab or semi-infinite jellium properties to properties of a double edge and a wire end. From (7.9 and 10) it follows, that the surface energy σ can be directly calculated from the electrostatic potential supposed α^{sph} is known.

8. Work function

In the case of such extended jellia as a straight wire or a planar slab the total number of electrons tends to infinite. Thus Eq. (2.13), which bases on the replacement of the energy difference to remove one electron by the corresponding differential quotient, should apply to these cases. Starting with a finite cylinder (2.13) takes the form

$$\phi_{A,L}=-\varepsilon_{A,L}-\frac{1}{3}\left(A\frac{\partial}{\partial A}+L\frac{\partial}{\partial L}\right)_n\varepsilon_{A,L}+\frac{2}{3}\overline{\varphi^{1}}^{L}_{A,L}+\frac{1}{3}\overline{\varphi^{2}}^{A}_{A,L}-\varphi_{A,L}(\infty). \tag{8.1}$$

In the *planar slab* limit $A\to\infty$ with $\varepsilon_{A,L}\to\varepsilon+\sigma_L/nL$ it is

$$\phi_L=-\varepsilon-\frac{1}{3}\left[\frac{1}{nL}\left(2+L\frac{\partial}{\partial L}\right)\sigma_L-2\overline{\varphi^{1}}^{L}_{L}-\varphi_L\right]-\varphi_L(\infty). \tag{8.2}$$

With the help of (6.9 and 10) this is rewritten as

$$\phi_L=\phi-\frac{1}{L}\frac{\partial}{\partial n}\sigma_L+\varphi(\infty)-\varphi_L(\infty)+\overline{\varphi}^{L}_{L}, \tag{8.3}$$

where $\phi=-\varepsilon+\varphi-\varphi(\infty)$ means the work function of the semi-infinite jellium (with background density n). This agrees with (27) of II taking $\varepsilon_L=2nL\varepsilon+2\sigma_L$ into account. Kohn-Sham calculations for the planar jellium slab have been performed by Schulte (73, 76) and Campbell et al. (83).
In the *straight wire* limit $L\to\infty$ with $\varepsilon_{A,L}\to\varepsilon+2\sigma_A/nA$ (8.1) gives

$$\phi_A=-\varepsilon-\frac{1}{3}\left[\frac{2}{nA}\left(2+A\frac{\partial}{\partial A}\right)\sigma_A-2\varphi_A-\overline{\varphi^{2}}^{A}_{A}\right]-\varphi_A(\infty). \tag{8.4}$$

With the help of (6.11 and 12) this can be rewritten as

$$\phi_A = \phi - \frac{2}{A}\frac{\partial}{\partial n}\sigma_A + \varphi(\infty) - \varphi_A(\infty) + \bar{\varphi}_A^A. \tag{8.5}$$

Comparing (8.3) with (8.5) the essential replacement is $1/L$ by $2/A$.

The problem of a *jellium sphere* is of actual interest in connection with the peculiarities of small particles (consisting of up to about 1000 atoms). There are attempts to treat them (e.g. their photoemission or polarizability) within the jellium model (Inglesfield 83, Snider, Sorbella 83a). The problem of a jellium sphere is also of interest in connection with cluster calculations describing impurities in simple metals (Hintermann, Manninen 82). From this latter paper (and Martins 79) follows a qualitative behaviour of σ_R as shown in Fig. 1. The work function was calculated on the basis of the density functional formalism variationally with the help of trial functions (Snider and Sorbella 83b) and self-consistently within the Kohn-Sham scheme (Ekardt 84). Snider and Sorbella showed, that the above mentioned replacement holds only for large radii R (the difference between both expressions – the energy difference and the differential quotient – is $\sim 1/R$). Thus, inserting $\varepsilon_R = \varepsilon + 3\sigma_R/nR$ into (2.13) the expressions

$$\phi_R = -\varepsilon - \frac{1}{nR}\left(2 + R\frac{\partial}{\partial R}\right)\sigma_R + \varphi_R - \varphi_R(\infty) \tag{8.6}$$

or with (3.5)

$$\phi_R = \phi - \frac{3}{R}\frac{\partial}{\partial n}\sigma_R + \varphi(\infty) - \varphi_R(\infty) + \bar{\varphi}_R^R \tag{8.7}$$

arise, which are physically of less interest. They correspond (apart from $\varphi_R(\infty)$ to the Lagrange parameter μ_R in the variational treatment of Snider and Sorbello (83b): $\phi_R = \mu_R - \varphi_R(\infty)$.

9. Virial theorem

For the bulk energy per particle, $\varepsilon = t + v$, it follows from (2.1 and 2)

$$2t + v = 3n\frac{d\varepsilon}{dn}. \tag{9.1}$$

Using this bulk VT, for the surface energy of a sphere, $\sigma_R = t_R^s + v_R^s$, arises

$$2t_R^s + v_R^s = \left(3n\frac{\partial}{\partial n} - R\frac{\partial}{\partial R} - 2\right)\sigma_R. \tag{9.2}$$

The same relation holds also for the surface energy of a spherical void, $\sigma_R^v = t_R^{vs} + v_R^{vs}$:

$$2t_R^{vs} + v_R^{vs} = \left(3n\frac{\partial}{\partial n} - R\frac{\partial}{\partial R} - 2\right)\sigma_R^v. \tag{9.3}$$

This follows from the definition of σ_R^v and (2.1,2), (9.1,2). Similarly the VT's for the surface and edge energies of a cylinder, $\sigma_A = t_A^s + v_A^s$, $\sigma_L = t_L^s + v_L^s$ and

$\kappa_{A,L} = t^e_{A,L} + v^e_{A,L}$ are derived:

$$2t^s_A + v^s_A = \left(3n\frac{\partial}{\partial n} - A\frac{\partial}{\partial A} - 2\right)\sigma_A, \tag{9.4}$$

$$2t^s_L + v^s_L = \left(3n\frac{\partial}{\partial n} - L\frac{\partial}{\partial L} - 2\right)\sigma_L, \tag{9.5}$$

$$2t^e_{A,L} + v^e_{A,L} = \left(3n\frac{\partial}{\partial n} - A\frac{\partial}{\partial A} - L\frac{\partial}{\partial L} - 1\right)\kappa_{A,L}. \tag{9.6}$$

These are the wire VT, slab VT and cylinder edge VT. While (9.2 or 3 or 4 or 5) turn for $R \to \infty$ or $A \to \infty$ or $L \to \infty$, respectively, into the surface VT (= VT for the surface energy of a semi-infinite jellium, $\sigma = t^s + v^s$, see Vannimenus, Budd 77)

$$2t^s + v^s = \left(3n\frac{\partial}{\partial n} - 2\right)\sigma, \tag{9.7}$$

(9.6) turns for $A \to \infty$ (slab limit), into the double edge VT for $\kappa_L = t^e_L + v^e_L$,

$$2t^e_L + v^e_L = \left(3n\frac{\partial}{\partial n} - L\frac{\partial}{\partial L} - 1\right)\kappa_L, \tag{9.8}$$

and for $L \to \infty$ (wire limit) into the wire end VT for $\kappa_A = t^e_A + v^e_A$

$$2t^e_A + v^e_A = \left(3n\frac{\partial}{\partial n} - A\frac{\partial}{\partial A} - 1\right)\kappa_A. \tag{9.9}$$

(9.8) yields for $L \to \infty$ the 90°-edge VT for $\kappa = t^e + v^e$

$$2t^e + v^e = \left(3n\frac{\partial}{\partial n} - 1\right)\kappa. \tag{9.10}$$

The same results from (9.9) for $A \to \infty$.

All these VT's have the same structure, explained for the bulk VT (9.1) as an example: They allow (i) to relate kinetic and potential energy directly to each other

$$\left(3n\frac{\partial}{\partial n} - 2\right)t + \left(3n\frac{\partial}{\partial n} - 1\right)v = 0 \tag{9.11}$$

or (ii) to calculate them separately from the density dependence of the total energy

$$t = \left(3n\frac{\partial}{\partial n} - 1\right)\varepsilon, \qquad v = -\left(3n\frac{\partial}{\partial n} - 2\right)\varepsilon. \tag{9.12}$$

Similar relations are valid for σ_R, σ^v_R, σ_A, σ_L, σ, $\kappa_{A,L}$, κ_A, κ_L, and κ. They have been discussed for the bulk energy ε by Macke and Ziesche (64) and for the surface energy σ by Vannimenus and Budd (77).

10. Summary

For a jellium, the geometry of which is completely characterized by several linear parameters, there exists one virial theorem but as much 'detailed' Pauli-Hellmann-Feynman theorems as such linear parameters appear. Their sum gives the 'total' Pauli-Hellmann-Feynman theorem, which is directly connected with the virial theorem. These theorems are also closely related to the expressions for pressure and work function.

Using this general concept rigorous theorems for certain jellium geometries have been obtained. Four types occur: (i) The theorems (3.5), (4.4), (6.11), (5.10) or (6.10) and (7.9) connect for a sphere, a void, a wire, a slab and a semi-infinite jellium, respectively, the surface energy and/or its derivative with respect to the background density and/or to the geometry parameter with the electrostatic potential produced by the background and the electron distribution. Supposed $\delta^{\upsilon}_{R_1} = 0$, then also (4.6) belongs to this type of theorems. In case the Kohn-Sham equation is solved for the mentioned geometries as being done by Lang and Kohn (70) for the semi-infinite jellium or by Ekardt (84) for the jellium sphere, then the results for the surface energy and the potential can be checked with the help of the corresponding theorems, similar to the discussion of the semi-infinite jellium by Vannimenus and Budd (74). By the way, the slab theorem (5.10) or (6.10) can be obtained directly from (2.8), if applied from the very beginning to an extended planar slab with its energy per area, $\varepsilon_L = 2Ln\varepsilon + 2\sigma_L$. Similarly, the wire theorem (6.11) follows immediately from (2.8), if applied to an extended straight wire with its energy per length, $\varepsilon_A = \pi A^2 n\varepsilon + 2\pi A\sigma_A$.

(ii) The theorems (4.6), (5.12, 14, 15) and (7.10) connect for a void, a slab or a semi-infinite jellium, respectively, the corresponding surface energies and potentials with certain quantities involving the evolution of the considered geometry from a 'higher' one (a void arises from a spherical shell, a slab arises from a spherical shell or a finite cylinder, a semi-infinite jellium arises from a sphere, a void, a slab or a cylinder). Because of these latter quantities the mentioned theorems are more complicated and less useful than those of (i).

(iii) The theorems (6.16), (6.18) and (7.7, 8) connect for a slab, a wire and a semi-infinite jellium the corresponding surface energies and/or potentials with the potentials, appearing at a jellium double edge or a jellium wire end.

(iv) The theorems (6.13, 14) connect the edge energy of a finite cylinder, $\kappa_{A,L}$, with the potential at the edge, $\varphi_{A,L}(a, z)$. It should be worthwhile to consider the limits $A \to \infty$ (double edge), $L \to \infty$ (wire end), and $A,L \to \infty$ (90° edge) and to elaborate the connection with the theorems (iii). The VT's for the edge energies are given in (9.8, 9, 10).

The Lang-Kohn calculations for the semi-infinite jellium have stressed its role as a model for plane metal surfaces. Corresponding calculations for special finite jellia are similarly significant as models or systems of reference for special problems. Jellium sphere, void, wire, and slab are simple models for small metallic particles, vacancies (and vacancy clusters or voids), thin wires, and thin films, respectively. Preliminary attempts for the sphere were mentioned in § 8. In § 4 it was referred to void calculations. Wire calculations have not been performed to our knowledge. Slab calculations were mentioned in § 8. Such Kohn-Sham calculations for special finite jellia can be also used to discuss the work function according to (8.2, 5) and the VT's according to (9.2, 3, 4, 5).

Acknowledgement

An essential part of this paper was performed during a visit at the Institut für Physik of the Universität Basel. One of us (P.Z.) would like to thank Prof. H.-J. Güntherodt for this opportunity, the financial support by the Schweizer Nationalfonds is gratefully acknowledged. The paper was continued during a common stay at the Joint Institute for Nuclear Research Dubna. The authors thank Prof. H. Thomas and Dr. R. Monnier for helpful discussions.

Appendix 1:

According to usual electrostatics the r.h.s. of (2.4) can be equivalently written as

$$3N\int d^3r G^i_{\mathcal{V}}(\vec{r})\nu_{\mathcal{V}}(\vec{r}) \quad \text{with} \quad G^i_{\mathcal{V}}(\vec{r})\equiv\int\frac{d^3r'\mu^i_{\mathcal{V}}(\vec{r}')}{4\pi\,|\vec{r}-\vec{r}'|} \tag{A1.1}$$

or as

$$3N\int d^3r \vec{F}^i_{\mathcal{V}}(\vec{r})\vec{E}_{\mathcal{V}}(\vec{r}) \quad \text{with} \quad \vec{F}^i_{\mathcal{V}}(\vec{r})\equiv-\frac{\partial G^i_{\mathcal{V}}(\vec{r})}{\partial\vec{r}},\ \vec{E}_{\mathcal{V}}(\vec{r})\equiv-\frac{\partial\varphi_{\mathcal{V}}(\vec{r})}{\partial\vec{r}}. \tag{A1.2}$$

Summing over i yield corresponding expressions with $G_{\mathcal{V}}(\vec{r})\equiv\sum_i G^i_{\mathcal{V}}(\vec{r})$ and $\vec{F}_{\mathcal{V}}(\vec{r})\equiv\sum_i F^i_{\mathcal{V}}(\vec{r})$, being the total (fictive) potential and field, respectively, caused by $\mu_{\mathcal{V}}(\vec{r})\equiv\sum_i\mu^i_{\mathcal{V}}(\vec{r})$, which – according to (2.11) – can be written as

$$\mu_{\mathcal{V}}(\vec{r})=-\frac{\partial}{\partial\vec{r}}\vec{\pi}(\vec{r}), \qquad \vec{\pi}(\vec{r})\equiv-\frac{\vec{r}}{3\mathcal{V}}\theta_{\mathcal{V}}(\vec{r}). \tag{A1.3}$$

This leads to

$$G_{\mathcal{V}}(\vec{r})=-\frac{\partial}{\partial\vec{r}}\int\frac{d^3r'\vec{\pi}_{\mathcal{V}}(\vec{r}')}{4\pi\,|\vec{r}-\vec{r}'|}, \tag{A1.4}$$

$$\vec{F}_{\mathcal{V}}(\vec{r})=-\vec{\pi}_{\mathcal{V}}(\vec{r})+\frac{\partial}{\partial\vec{r}}\times\left(\frac{\partial}{\partial\vec{r}}\times\int\frac{d^3r'\vec{\pi}_{\mathcal{V}}(\vec{r}')}{4\pi\,|\vec{r}-\vec{r}'|}\right). \tag{A1.5}$$

Thus $G_{\mathcal{V}}(\vec{r})$ and $\vec{F}_{\mathcal{V}}(\vec{r})=-\partial G_{\mathcal{V}}(\vec{r})/\partial\vec{r}$ arise from an inhomogeneous (fictive) dipole distribution $\vec{\pi}_{\mathcal{V}}(\vec{r})$. The r.h.s. of the total PHFT is equivalently given by $3N\int d^3r G_{\mathcal{V}}(\vec{r})\nu_{\mathcal{V}}(\vec{r})$ – as discussed and used in I and II – or by

$$3N\int d^3r\vec{F}_{\mathcal{V}}(\vec{r})\vec{E}_{\mathcal{V}}(\vec{r})=-3N\int d^3r\vec{\pi}_{\mathcal{V}}(\vec{r})\vec{E}_{\mathcal{V}}(\vec{r})=3N\overline{\frac{\vec{r}}{3}\vec{E}_{\mathcal{V}}}^{\mathcal{V}}. \tag{A1.6}$$

Because of $(\partial/\partial\vec{r})\times\vec{E}_{\mathcal{V}}(\vec{r})=0$ only the first term of (A1.5) contributes. $\vec{E}_{\mathcal{V}}(\vec{r})=-\partial\varphi_{\mathcal{V}}(\vec{r})/\partial\vec{r}$ leads consistently once more to $3N(\bar{\varphi}^{\mathcal{V}}_{\mathcal{V}}-\bar{\varphi}^{\mathcal{A}}_{\mathcal{V}})$, the r.h.s. of (2.9). It is $\int_{\mathcal{V}} d^3r\vec{E}_{\mathcal{V}}(\vec{r})=0$, thus (A1.6) does not depend on the choice of the coordinate origin.

Appendix 2:

(i) *Semi-infinite jellium* (constant background density for $s<0$): In this case charge density $\nu(s)$ and potential $\varphi(s)$ are connected with each other simply via

$$\varphi(s)=\int_{-\infty}^{s} ds'\nu(s')(s'-s), \qquad \int_{-\infty}^{+\infty} ds\nu(s)=0. \tag{A2.1,2}$$

The potential at the surface, $\varphi\equiv\varphi(0)$, is given by a semi-moment of $\nu(s)$. This holds also for the integral of $\varphi(s)$ inside the background:

$$\int_{-\infty}^{0} ds\varphi(s)=-\int_{-\infty}^{0} ds\nu(s)\frac{1}{2}s^2-S, \qquad S\equiv\left\{\int_{-\infty}^{s} ds'\nu(s')\left(ss'-\frac{s^2}{2}\right)\right\}_{s\to-\infty}. \tag{A2.3,4}$$

To guarantee $\varphi(-\infty)=0$, it is supposed

$$\int_{-\infty}^{s} ds'\nu(s')(s'-s)\to 0 \quad \text{for} \quad s\to-\infty. \tag{A2.5}$$

There are arguments (see e.g. Lang, Kohn 70) for Friedel oscillations according to $\nu(s)\to 3n\cos 2(k_F s-\gamma_F)/(2k_F s)^2\equiv\nu^{Fr}(s)$. They fulfill (A2.5), but (with $k_F^3=3\pi^2 n$)

$$S=\frac{1}{(4\pi)^2}\{\sin 2(k_F s-\gamma_F)\}_{s\to-\infty}, \tag{A2.4'}$$

which is exactly compensated by a corresponding part of the first term on the r.h.s. of (A2.3). If one splits the Friedel term $\nu^{Fr}(s)$ from the rapidly enough decaying remainder term $\nu^r(s)$ according to $\nu(s)=\theta(\bar{s}-s)\nu^{Fr}(s)+\nu^r(s)$ with an arbitrary cut-off parameter $\bar{s}<0$ to be chosen appropriately, then it is exactly

$$\int_{-\infty}^{0} ds\varphi(s)=-\int_{-\infty}^{0} ds\nu^r(s)\frac{1}{2}s^2. \tag{A2.3'}$$

Alternatively the unphysical terms do not at all appear, if a convergence factor $\exp(\delta\cdot s)$ with $\delta>0$ is included into the Friedel oscillations.

(ii) *Planar jellium slab* (constant background density for $|z|<L$): $\nu_L(z)=\nu_L(L+s)$ and $\varphi_L(z)=\varphi_L(L+s)$ are in the following denoted by $\nu_L(s)$ and $\varphi_L(s)$, respectively. They are connected with each other via

$$\varphi_L(s)=\int_{-L}^{s} ds'\nu_L(s')(s'-s), \qquad \int_{-L}^{\infty} ds\nu_L(s)=0. \tag{A2.6,7}$$

$L\bar{\varphi}_L^L$ is given by

$$\int_{-L}^{0} ds\varphi_L(s)=-\int_{-L}^{0} ds\nu_L(s)\frac{1}{2}s^2. \tag{A2.8}$$

For $L\to\infty$ one should expect $\nu_L(s)\to\nu(s)$, $\varphi_L(s)\to\varphi(s)$, $L\bar{\nu}_L^L\to N^+$, and $L\bar{\varphi}_L^L\to P$. This means (with $\Delta\nu_L(s)\equiv\nu_L(s)-\nu(s)$)

$$\int_{-L}^{0} ds\,\Delta\nu_L(s), \int_{-L}^{0} ds\,\Delta\nu_L(s)s, \int_{-L}^{0} ds(\nu_L(s)-\nu^r(s))s^2\to 0 \tag{A2.9}$$

for $L \to \infty$. With these assumptions the Eqs. (A2.6,7,8) approach (A2.1,2,3′) term by term. Thus the slab theorem (5.14) tends with $\sigma_L \to \sigma$, $\beta_L \to \beta^{\text{sla}}$ to $-\sigma = n(P-\beta^{\text{sla}})$, proving (7.2). (5.15) approaches the Eq. $(nd/dn-1)\sigma = n(2P-\gamma^{\text{sla}}-\beta^{\text{sla}})$, proving (7.1+2).

(iii) *Straight jellium wire* (constant background density for $a<A$): $\nu_A(a) = \nu_A(A+t)$ and $\varphi_A(a) = \varphi_A(A+t)$ are in the following denoted by $\nu_A(t)$ and $\varphi_A(t)$. They are connected with each other via

$$\varphi_A(t) = \int_{-A}^{t} dt'\, \nu_A(t') A\left(1+\frac{t'}{A}\right) \ln \frac{1+t'/A}{1+t/A}, \qquad \int_{-A}^{\infty} d\left(1+\frac{t}{A}\right)^2 \nu_A(t) = 0. \tag{A2.10,11}$$

$\varphi_A \equiv \varphi_A(0)$ and $A\bar{\varphi}_A^A$ are given by

$$\varphi_A = \int_{-A}^{0} dt\, \nu_A(t) A\left(1+\frac{t}{A}\right) \ln\left(1+\frac{t}{A}\right) \tag{A2.12}$$

and

$$A\bar{\varphi}_A^A = -\int_{-A}^{0} dt\, \nu_A(t) A^2\left[\frac{t}{A}+\frac{3t^2}{2A^2}+\frac{t^3}{2A^3}-\left(1+\frac{t}{A}\right)\ln\left(1+\frac{t}{A}\right)\right], \tag{A2.13}$$

respectively. For $A \to \infty$ one should expect $\nu_A(t) \to \nu(t)$, $\varphi_A(t) \to \varphi(t)$, $A\bar{\nu}_A^A \to 2N^+$ and $A\bar{\varphi}_A^A \to 2P$. This means (with $\Delta\nu_A(t) \equiv \nu_A(t) - \nu(t)$)

$$\int_{-A}^{0} dt\, \Delta\nu_A(t)\left(1+\frac{t}{A}\right), \int_{-A}^{0} dt\, \Delta\nu_A(t) A\left(1+\frac{t}{A}\right)\ln\left(1+\frac{t}{A}\right) \to 0 \tag{A2.14,15}$$

and

$$\int_{-A}^{0} dt\, \Delta\nu_A(t) A^2\left[\frac{t}{A}+\frac{3t^2}{2A^2}+\frac{t^3}{2A^3}-\left(1+\frac{t}{A}\right)\ln\left(1+\frac{t}{A}\right)\right] \to 0, \tag{A2.16}$$

where

$$\int_{-A}^{0} dt\, \nu(t) A^2\left[\frac{t}{A}+\frac{t^2}{2A^2}-\left(1+\frac{t}{A}\right)\ln\left(1+\frac{t}{A}\right)\right] \to S, \qquad \int_{-A}^{0} dt\, \nu(t)\frac{t^3}{2A} \to S, \tag{A2.17a,b}$$

and (A2.3,4′) are used. The other terms on the r.h.s. of the wire theorem (6.11) are with (A2.12 and 1) given by

$$A(\varphi_A - \varphi) = \int_{-A}^{0} dt\, \nu(t) A^2\left[\left(1+\frac{t}{A}\right)\ln\left(1+\frac{t}{A}\right)-\frac{t}{A}\right] - A\int_{-\infty}^{-A} dt\, \nu(t) t + \beta_A, \tag{A2.18a}$$

$$\beta_A \equiv \int_{-A}^{0} dt\, \Delta\nu_A(t) A^2\left(1+\frac{t}{A}\right)\ln\left(1+\frac{t}{A}\right). \tag{A2.18b}$$

For $A \to \infty$ it is $\beta_A \to \beta^{\text{w}}$ and the first two terms on the r.h.s. of (A2.18a) yield with (A2.17a,3,4′) together simply $-P$, thus

$$A(\varphi_A - \varphi) \to -P + \beta^{\text{w}}. \tag{A2.19}$$

Hence (6.11) approaches $(2nd/dn-1)\sigma = n(3P-\beta^{w})$. This proves $2\cdot$(7.1)–(7.2) and (7.6). β^{w} can be rewritten with the help of (A2.16).

(iv) *Jellium sphere* (constant background density for $r<R$): $\nu_R(r)=\nu_R(R+s)$ and $\varphi_R(r)=\varphi_R(R+s)$ are in the following denoted by $\nu_R(s)$ and $\varphi_R(s)$. They are connected with each other via

$$\varphi_R(s)=\int_{-R}^{s} ds'\nu_R(s')(s'-s)\frac{1+s'/R}{1+s/R}, \qquad \int_{-R}^{\infty} d\left(1+\frac{s}{R}\right)^3 \nu_R(s)=0. \tag{A2.20,21}$$

The potential $\varphi_R \equiv \varphi_R(0)$ and the term $R\bar{\varphi}_R^R$ are given by

$$\varphi_R=\int_{-R}^{0} ds\,\nu_R(s)s\left(1+\frac{s}{R}\right) \tag{A2.22}$$

and

$$R\bar{\varphi}_R^R=-\int_{-R}^{0} ds\,\nu_R(s)\left(\frac{3}{2}s^2+2\frac{s^3}{R}+\frac{s^4}{2R^2}\right), \tag{A2.23}$$

respectively. For $R\to\infty$ one should expect $\nu_R(s)\to\nu(s)$, $\varphi_R(s)\to\varphi(s)$, $R\bar{\nu}_R^R\to 3N^{+}$, and $R\bar{\varphi}_R^R\to 3P$. This means (with $\Delta\nu_R(s)\equiv\nu_R(s)-\nu(s)$)

$$\int_{-R}^{0} ds\,\Delta\nu_R(s)\left(1+\frac{s}{R}\right), \int_{-R}^{0} ds\,\Delta\nu_R(s)s\left(1+\frac{s}{R}\right)\to 0 \tag{A2.24,25}$$

and

$$\int_{-R}^{0} ds\,\Delta\nu_R(s)\left(\frac{3}{2}s^2+2\frac{s^3}{R}+\frac{s^4}{2R^2}\right)\to 0, \tag{A2.26}$$

where (A2.17b) and $\int_{-R}^{0} ds\,\nu(s)s^4/2R^2\to -S$ is used. The other terms on the r.h.s. of the sphere theorem (3.5) are with (A2.22) and (A2.1) rewritten as

$$R(\varphi_R-\varphi)=2\int_{-R}^{0} ds\,\nu(s)\frac{1}{2}s^2-R\int_{-\infty}^{-R} ds\,\nu(s)s+\alpha_R, \tag{A2.27a}$$

$$\alpha_R\equiv\int_{-R}^{0} ds\,\Delta\nu_R(s)s(R+s). \tag{A2.27b}$$

For $R\to\infty$ it is $\alpha_R\to\alpha^{\mathrm{sph}}$ and the first two terms on the r.h.s. of (2.27a) yield with (A2.3,4′) together simply $-2P$, thus

$$R(\varphi_R-\varphi)\to -2P+\alpha^{\mathrm{sph}}. \tag{A2.28}$$

Hence (3.5) approaches $(3nd/dn-2)\sigma = n\,(5P-\alpha^{\mathrm{sph}})$. This proves $3\cdot$(7.1)–(7.2) and (7.3).

(v) Conjecture concerning α^{sph} and β^{w}: They are eventually simply given by

$$\alpha^{\mathrm{sph}}=\left\{R\int_{-R}^{0} ds\,\Delta\nu_R(s)s\right\}_{R\to\infty}, \qquad \beta^{w}=\left\{A\int_{-A}^{0} dt\,\Delta\nu_A(t)t\right\}_{A\to\infty} \tag{A2.29}$$

because the higher order terms s^2 and $3t^2/2+t^3/2A$ perhaps don't contribute.

(vi) *Spherical jellium shell* (constant background density for $R_1<r<R_2$): $\nu_{R_1,R_2}(r)$ and $\varphi_{R_1,R_2}(r)$ are connected with each other via

$$\varphi_{R_1,R_2}(r)=\int_R^r dr'\nu_{R_1,R_2}(r')(r'-r)\frac{r'}{r}, \tag{A2.30}$$

$$\int_0^R d^3r\nu_{R_1,R_2}(r)=0, \qquad \int_R^\infty d^3r\nu_{R_1,R_2}(r)=0 \tag{A2.31a,b}$$

For a *void* the limit $R_2\to\infty$ is considered: $\nu_{R_1,R_2}(r)\to\nu^v_{R_1}(r)$, $\varphi_{R_1,R_2}(r)\to\varphi^v_{R_1}(r)$, $R\to\infty$. Now $\nu^v_{R_1}(r)=\nu^v_{R_1}(R_1-s)$ and $\varphi^v_{R_1}(r)=\varphi^v_{R_1}(R_1-s)$ are denoted by $\nu^v_{R_1}(s)$ and $\varphi^v_{R_1}(s)$, respectively. Then the r.h.s. of the void theorem (4.4) is given by

$$R_1(\varphi^v_{R_1}-\varphi)=R_1\left[\int_{-\infty}^0 ds\,\nu^v_{R_1}(s)s\left(1-\frac{s}{R_1}\right)-\int_{-\infty}^0 ds\,\nu(s)s\right] \tag{A2.32}$$

and rewritten as

$$R_1(\varphi^v_{R_1}-\varphi)=-2\int_{-\infty}^0 ds\,\nu^r(s)\frac{1}{2}s^2-\alpha^v_{R_1}, \tag{A2.33a}$$

$$\alpha^v_{R_1}\equiv-R_1\int_{-\infty}^0 ds[\nu^v_{R_1}(s)-\nu(s)]s+\int_{-\infty}^0 ds[\nu^v_{R_1}(s)-\nu^r(s)]s^2. \tag{A2.33b}$$

In the limit $R_1\to\infty$ one should expect $\nu^v_{R_1}(s)\to\nu(s)$, $\varphi^v_{R_1}(s)\to\varphi(s)$, and $\alpha^v_{R_1}\to\alpha^v$. Thus with (A2.3′) it is $R_1(\varphi^v_{R_1}-\varphi)\to 2P-\alpha^v$ and (4.4) tends to $-2\sigma^v=n(2P-\alpha^v)$. This proves (7.2 and 4).- In the other void theorem (4.6) the first term on the r.h.s. is given by

$$3\frac{\int_{R_1}^\infty d^3r\varphi^v_{R_1}(r)}{4\pi R_1^2}=-R_1\int_{-\infty}^0 d\left(1-\frac{s}{R_1}\right)^3\varphi^v_{R_1}(s)\to 3P \quad\text{for}\quad R_1\to\infty. \tag{A2.34}$$

Assuming $\delta^v_{R_1}\to\delta^v$ for $R_1\to\infty$ the Eq. (4.6) approaches $3n\,d\sigma/dn=n(3P-\delta^v)$. This proves (7.1 and 5).

For the *planar slab* limit the r.h.s. of (5.2) has to be inspected. The first term is given by

$$R_i\bar{\varphi}^{R_1,R_2}_{R_1,R_2}=\frac{R_iR^3}{R_2^3-R_1^3}\left[\int_0^{L_2} d\left(1+\frac{z}{R}\right)^3\varphi^2_{L,R}(z)+\int_0^{L_1} d\left(1-\frac{z}{R}\right)^3\varphi^1_{L,R}(z)\right], \tag{A2.35}$$

where for $r>R$ the substitution $r=R+z$ is introduced and $\varphi_{R_1,R_2}(R+z)$ is denoted by $\varphi^2_{L,R}(z)$, and for $r<R$ the substitution $r=R-z$ is introduced and $\varphi_{R_1,R_2}(R-z)$ is denoted by $\varphi^1_{L,R}(z)$. In the limit $R\to\infty$, $L=\text{const}$ one should expect $\nu^i_{L,R}(z)\to\nu_L(z)$, $\varphi^i_{L,R}(z)\to\varphi_L(z)$ and

$$\begin{aligned}\frac{1}{R^2}\int_0^{Li} dz(R\mp z)^2\nu^i_{L,R}(z)&\to\int_0^L dz\,\nu_L(z),\\ \frac{1}{R^2}\int_0^{Li} dz(R\mp z)^2\phi^i_{L,R}(z)&\to\int_0^L dz\,\phi_L(z)\end{aligned} \tag{A2.36}$$

for $i = 1,2$. Thus with (5.3) it is

$$R_i \bar{\varphi}^{R_1,R_2}_{R_1,R_2} \to \left(\frac{R}{L} \mp 1\right) L \bar{\varphi}^L_L + \beta''_L, \tag{A2.37}$$

$$\beta''_L \equiv \frac{1}{L}\left\{\frac{R}{2}\left[\int_0^{L_1} dz\, \varphi^1_{L,R}(z) + \int_0^{L_2} dz\, \varphi^2_{L,R}(z) - 2\int_0^{L} dz\, \varphi_L(z)\right]\right\}_{R\to\infty}. \tag{A2.37b}$$

The other terms on the r.h.s. of (5.2) are with (A2.30 and 6) given by

$$R_i(\varphi^i_{R_1,R_2} - \varphi) \to \pm 2L\bar{\varphi}^L_L + \left(\frac{R}{L} \mp 1\right) L(\varphi_L - \varphi) \mp 2\beta^i_L. \tag{A2.38}$$

(A2.37 and 38) inserted into (5.2) yield (5.5). β''_L is in (5.8b) equivalently expressed.

REFERENCES

D. A. Campbell, A. A. Maradudin, R. F. Wallis, *Solid State Commun. 45*, 125 (1983).

J. Deutz, R. Zeller, P. H. Dederichs, KFA-print Jül-1805, ISSN 0366-0885, Sept. 1982.

W. Ekardt, Phys. Rev. *B29*, 1558 (1984), Phys. Rev. Lett. *52*, 1925 (1984), Surf. Sci. (1984).

F. M. Fernandez, E. A. Castro, Int. J. Qu. Chem. *XXI*, 741 (1982).

M. W. Finnis, R. Nieminen, J. Phys. F: Met. Phys. *7*, 1999 (1977).

J. Gyémánt, G. Solt, phys. stat. sol. (b) *82*, 651 (1977).

J. Heinrichs, phys. stat. sol. (b) *92*, 185 (1979).

J. E. van Himbergen, R. Silbey, Phys. Rev. *B20*, 567 (1979).

A. Hintermann, M. Manninen, SIN-Print PR-82-13, Aug. 1982.

J. Inglesfield, Europhys. Conf. Abstr. *7b*, 358 (1983), J. Phys. *C16*, 403 (1983).

K. Kunc, R. M. Martin, in: J. T. Devreese, V. E. Van Doren, P. E. Van Camp (Eds.), *Ab initio calculation of phonon spectra*, Plenum, New York, 1983, p. 65, J. Phys. (Paris) *42*, Suppl. C-6, 649 (1981), Phys. Rev. Lett. 48, 406 (1982).

N. D. Lang, W. Kohn, Phys. Rev. *B1*, 4555 (1970).

D. Lehmann, P. Ziesche, in: P. Ziesche (Ed.), Proc. 13th Symp. Electronic Structure, Technische Universität Dresden, 1983, p. 185. In this paper it is assumed $\alpha^{sph} = 0$, but according to (7.10) this should be true only for a special background density n^*.

W. Macke, P. Ziesche, Ann. Phys. (Lpz.) *13*, 26 (1964).

J. L. J. Martins, Diplomawork, Ecole Polytechnique Fédérale de Lausanne, 1979.

G. G. Robinson, P. F. De Chatel, J. Phys. *F5*, 1502 (1975).

F. K. Schulte, Thesis, Ludwig-Maximilians-Universität München, 1973, Surf. Sci. *55*, 427 (1976).

D. R. Snider, R. S. Sorbella, Phys. Rev. *B28*, 5702 (1983a), Solid State Commun. *47*, 845 (1983b).

G. Velo, A. S. Wightman (Eds.), *Rigorous Atomic and Molecular Physics*, Plenum, New York, 1981.

J. Vannimenus, H. F. Budd, Solid State Commun. *15*, 1739 (1974).

J. Vannimenus, H. F. Budd, Phys. Rev. *B15*, 5302 (1977).

P. Ziesche, J. Phys. C: Solid State Phys. *13*, 3625 (1980), Corrigenda see *14*, 1903 (1981).

P. Ziesche, in: P. Ziesche, G. Lehmann (Eds.), *Ergebnisse in der Elektronentheorie der Metalle*, Akademie-Verlag, Berlin, 1983, and Springer-Verlag, Berlin, Heidelberg, New York, Tokyo, 1983, p. 557.

P. Ziesche, D. Lehmann, J. Phys. C: Solid State Phys. *15*, 4807 (1982), Corrigenda see *15*, 7263 (1982).

P. Ziesche, D. Lehmann, J. Phys. C: Solid State Phys. *16*, 879 (1983).