Zeitschrift: Helvetica Physica Acta
Band: 49 (1976)
Heft: 3

Artikel: Meson exchange currents in nuclei; the triton beta decay as an example
Autor: Jaus, W.
DOI: https://doi.org/10.5169/seals-114778

Nutzungsbedingungen
Die ETH-Bibliothek ist die Anbieterin der digitalisierten Zeitschriften auf E-Periodica. Sie besitzt keine Urheberrechte an den Zeitschriften und ist nicht verantwortlich für deren Inhalte. Die Rechte liegen in der Regel bei den Herausgebern beziehungsweise den externen Rechteinhabern. Das Veröffentlichen von Bildern in Print- und Online-Publikationen sowie auf Social Media-Kanälen oder Webseiten ist nur mit vorheriger Genehmigung der Rechteinhaber erlaubt. Mehr erfahren

Conditions d'utilisation
L'ETH Library est le fournisseur des revues numérisées. Elle ne détient aucun droit d'auteur sur les revues et n'est pas responsable de leur contenu. En règle générale, les droits sont détenus par les éditeurs ou les détenteurs de droits externes. La reproduction d'images dans des publications imprimées ou en ligne ainsi que sur des canaux de médias sociaux ou des sites web n'est autorisée qu'avec l'accord préalable des détenteurs des droits. En savoir plus

Terms of use
The ETH Library is the provider of the digitised journals. It does not own any copyrights to the journals and is not responsible for their content. The rights usually lie with the publishers or the external rights holders. Publishing images in print and online publications, as well as on social media channels or websites, is only permitted with the prior consent of the rights holders. Find out more

Download PDF: 25.01.2026

ETH-Bibliothek Zürich, E-Periodica, https://www.e-periodica.ch

Meson Exchange Currents in Nuclei; the Triton Beta Decay as an Example

by **W. Jaus**

Institut für Theoretische Physik der Universität Zürich,
8001 Zürich, Schönberggasse 9, Switzerland

(7. I. 1976)

Abstract. The method used to reduce the four-dimensional Bethe–Salpeter equation to the three-dimensional Schrödinger equation, thus defining a potential in terms of the field theoretic interaction, can be generalized to define a consistent exchange current by considering the relativistic interaction of a current with a bound state of nucleons. This covariant approach allows a unified treatment of exchange current effects, renormalization of the nuclear wave function due to meson exchange, relativistic corrections and negative energy contributions to the wave function, and we discuss in detail how these effects influence the Gamow–Teller matrix element for the decay $^3\mathrm{H} \rightarrow {}^3\mathrm{He} + e + \bar{\nu}$. We calculate one and two-meson exchange processes, including nucleon resonances in intermediate states, and find good agreement of theoretical and experimental predictions for the GT matrix element.

1. Introduction

The nucleus as a bound state of nucleons is usually described in terms of a wave function which is the solution of a Schrödinger equation with an appropriately chosen potential. We shall not touch upon the difficulties associated with the many body aspect of the Schrödinger equation, but assume this problem can be solved, at least approximately, by the methods of nuclear physics. But even if the wave function is known exactly, from a more fundamental point of view it does not contain the complete information concerning the bound state. This can be seen more clearly if one uses field theory, which is the appropriate model to formulate the relativistically invariant interaction of particles, and starts with the Bethe–Salpeter equation. Since this is a covariant equation for the bound state with a symmetric treatment of space and time variables (i.e. to each constituent of the bound state is ascribed an individual time), its content and predictions are not immediately clear if one is used to a single-time description of bound state problems. It is therefore of great help to consider merely a special class of solutions of the Bethe–Salpeter equation; which class is defined by fixing the time components of the variables in some manner. The necessary prescriptions are usually chosen in such a way that the Bethe–Salpeter equation is transformed thereby into a Schrödinger-like equation and one of the practical consequences of this procedure (termed the quasipotential method) is that the resulting kernel of the 3-dimensional equation defines a nuclear 'potential' in terms of the field theoretic interaction. A guide to the vast literature on this subject can be found in Refs. [1, 2]. Both types of equations are equivalent, but neither the 4-dimensional Bethe–Salpeter

equation nor the 3-dimensional quasipotential equation can be solved exactly since their respective kernels cannot be given in closed form. Moreover, the number of terms included in the quasipotential is larger than those of the Bethe–Salpeter kernel and depends upon the specific reduction scheme by which it is defined. Consequently, infinitely many quasipotentials can be constructed and this freedom could be used in principle to design a 3-dimensional equation in terms of a kernel which is reasonably approximated by a few low order graphs. Preliminary work in this direction has been reported in Ref. [2].

The interpretation of matrix elements between bound states as given by field theory [3] can be given along similar lines of reasoning. We consider specifically the matrix element of the current operator and generalize the quasipotential formalism in order to express the matrix element in terms of the single-time wave function [4]. This approach defines a quasicurrent, which describes the (relativistic) interaction of a current with a many body bound system in the framework of quantum mechanics. Thereby information about the bound state (e.g. its behavior if particles move off the mass shell, negative energy states) that gets lost when a wave function is defined, is transferred to a quasioperator. More specifically, the quasicurrent describes also the interaction of the bound state with the current for those values of the energy-variable of the bound particles which are excluded from the wave function. It should be emphasized at this point that the above derivation is exact, i.e. field theory and quantum mechanics together with quasioperators are equivalent. Since the behavior of the quasioperators under Lorentz transformation is known, relativistic effects in nuclear physics can be discussed in a consistent way.

The quasicurrent can be represented as a sum of n-body currents (where n specifies the number of nucleons interacting with the current and with each other), and for $n \geqslant 2$ we have what is usually termed exchange currents, the details of which depend upon the quasipotential method by which it is defined, i.e. upon the particular choice of the wave function. It should be mentioned also that the wave function cannot simply be normalized to unity, because mesonic effects change this normalization. This means, the bound state of nucleons can exist in virtual states where there are pions present beside the nucleons or some nucleons can be in resonant states, and the probability for these virtual states must be included in the normalization conditions for the wave function. Exchange current effects and the normalization correction of the wave function must be treated on the same footing. This can be seen quite clearly if a conserved current is considered: the renormalization of the charge due to exchange current corrections is exactly cancelled by the effect of the normalization correction of the wave function, which guarantees that the total charge of the bound state equals the sum of the charges of the bound nucleons.

For practical applications, we assume that the nucleon–nucleon interaction can be reliably approximated by the exchange of bosons $B = \pi, \rho, \omega$ etc. and including a few low-lying nucleon resonances N^* in virtual states. An especially attractive example for the application of these formal developments is offered by the process $^3\mathrm{H} \to {}^3\mathrm{He} + e + \bar{\nu}$. Exchange current contributions to the Gamow–Teller (GT) n-matrix element published in the past [5–10] amount to about 13%, while the experimental results demand a correction of about 6%. It has been argued [10, 11] that inclusion of the normalization correction of the wave function might reduce this discrepancy, but no detailed calculations of this effect had been done. The main reason for this sizable disagreement of theoretical and experimental predictions seems to be the selective

treatment of meson exchange effects and therefore, one has good reason to expect that a consistent theory of meson exchange currents which uses a correctly normalized wave function gives a more satisfactory result.

For the practical development of these ideas, the quasipotential approach of Gross and Fronsdal [12–14], in which all nucleons except for one are kept on the mass shell (this is the prescription which fixes the energy of each bound nucleon, thus inducing a single-time wave function, a quasipotential and a quasicurrent in the manner described above), proves to be especially suitable, since it allows a representation of exchange currents by Feynman-like diagrams, instead of time-ordered diagrams. We shall discuss in this paper two-body currents only and neglect all three-body interactions, which assumption is supported by the fact that there is no evidence as yet for important contributions of three-body forces to nuclear properties. One boson exchange (OBE) and two boson exchange (TBE) currents are considered. It is a crucial property of our method that by means of simple approximations, TBE currents can be represented analytically in momentum space, thus enabling an easy discussion of these effects[1]).

In Section 2 of this paper, a relativistic wave function is defined, upon which the discussion of meson exchange effects in later sections is based. In order to make the connection with the wave function of nuclear physics, another (nonrelativistic) wave function is derived. The difference between these two wave functions will give rise to a relativistic correction. In Section 3, the relativistic matrix element of a current between bound states is discussed and expressions for the 2-nucleon current are derived, which can be represented in terms of Feynman-like diagrams. The main assumption for later applications is that the 2-nucleon current can be approximated by a few low-order graphs, and that the effect of the 3-nucleon current can be neglected. Section 4 presents details of the calculation of exchange current contributions to the GT-matrix element of the triton β-decay. Meson exchange effects are classified according to the number of mesons exchanged between two nucleons and we consider the cases where there is no meson exchanged (impulse approximation), one meson exchanged (OBE current) and two mesons exchanged (TBE current). The impulse approximation gives the GT-matrix element as predicted by (nonrelativistic) nuclear physics, with additional relativistic corrections (the discussion of relativistic corrections is continued in Appendix 2). OBE currents have been discussed in Refs. [5–10] and are included for comparisons. We mentioned already that TBE currents can be treated analytically. These TBE currents are highly singular operators and the necessary matrix elements are determined using a method by means of which the two-nucleon short range correlations of the three-nucleon system are accurately accounted for (further details about the handling of matrix elements are given in Appendix 1 and 3). The renormalization of the wave function due to the exchange of mesons is considered in Section 5, and it is shown how this effect can be represented also by Feynman-like diagrams. The contributions of the various processes are collected in Section 6 and we discuss the corresponding change of the GT matrix element.

---

[1]) The same method could in principle be used also to represent the quasipotential in configuration space. Analytic expressions are available of course for OBE potentials (at least in the nonrelativistic limit), but TBE potentials are known as yet only numerically. For example, the two pion exchange potential essentially is a superposition of (singular) Yukawa-type functions and Bessel functions.

2. The Definition of the Wave Function

We shall first present the exact relativistic equations for the two particle bound state. Once the two particle problem is understood, the final formula can be generalized for many particle bound states.

The Bethe–Salpeter equation for the bound state vertex function for two nucleons can be written as

$$\Gamma_P(p) = \frac{i}{(2\pi)^4}\int d^4k U(p, k, P)G(k, P)\Gamma_P(k) \tag{2.1}$$

where [15]

$$G^{-1}(k, P) = \left[\gamma\left(\frac{P}{2} + k\right) - m + i\epsilon\right]^{(1)}\left[\gamma\left(\frac{P}{2} - k\right) - m + i\epsilon\right]^{(2)} \tag{2.2}$$

P is the energy-momentum 4-vector of the bound state with mass M, i.e.

$$P^2 = M^2, \tag{2.3}$$

p and k are relative 4-momenta, U is the interaction kernel consisting of all irreducible diagrams for two interacting nucleons of mass m. The superscripts (1) and (2) refer to the two nucleons. We have omitted spin and isospin indices.

The Bethe–Salpeter equation (2.1) is not immediately applicable to bound state problems which are described by a single-time wavefunction, as is the case in nuclear physics. For this purpose, the quasipotential method has been developed, where the 4-dimensional equation (2.1) is reduced to a 3-dimensional equation. This can be accomplished by writing for the Green's function G the identity

$$G = g + (G - g) \tag{2.4}$$

with an appropriately chosen function g. In terms of this new Green's function, we can rewrite equation (2.1) in the form

$$\Gamma_P(p) = \frac{i}{(2\pi)^4}\int d^4k \vartheta(p, k, P)g(k, P)\Gamma_P(k) \tag{2.5}$$

and the effective interaction kernel ϑ is given by the equation which we write in operator notation as

$$\vartheta = U + U(G - g)\vartheta. \tag{2.6}$$

Equation (2.5) is a 3-dimensional equation if the function g is chosen appropriately and can be solved once the kernel ϑ can be obtained from equation (2.6). It is entirely equivalent to the 4-dimensional equation (2.1). However, none of these equations can be solved exactly, since their respective kernels cannot be given in closed form. The general procedure is to expand both U and ϑ into series which consist of terms which correspond to the number of bosons exchanged between the interacting nucleons

$$U = U^{(1)} + U^{(2)} + \cdots$$
$$\vartheta = \vartheta^{(1)} + \vartheta^{(2)} + \cdots$$
$$\vartheta^{(1)} = U^{(1)}$$
$$\vartheta^{(2)} = U^{(2)} + U^{(1)}(G - g)U^{(1)}$$

and so on. The approximation consists of truncating these series after the first or second term. For example, solving equation (2.1) with $U = U^{(1)}$ gives the ladder approximation to the Bethe–Salpeter equation. $\vartheta^{(1)}$ is called the OBE potential and $\vartheta^{(2)}$ the TBE potential. The detailed form of the TBE potential is seen to depend on the choice of g. A critical comparison of different 3-dimensional reductions of the Bethe–Salpeter equation has been made in Ref. [2], however it seems difficult to differentiate between them as to their relative rate of convergence toward the exact 4-dimensional equation, when the effective interaction kernel ϑ is approximated in the manner indicated above.

We shall use two reduction schemes. The first restricts one of the nucleons to its mass shell everywhere in the equation. This prescription proves to be especially useful for the formal developments of this paper. A second reduction formalism requires both nucleons to be on their respective mass shells, which then leads to the Schrödinger equation.

Following the work of Gross [13], we choose

$$g(k, P) = -2\pi i\delta\left(\left(\frac{P}{2} + k\right)^2 - m^2\right)$$

$$\ominus(k_0)\,\frac{[\gamma\cdot(P/2 + k) + m]^{(1)}[\gamma\cdot(P/2 - k) + m]^{(2)}}{(P/2 - k)^2 - m^2}. \tag{2.7}$$

By this covariant prescription, particle 1 is put on the mass shell. This procedure has been discussed also by Fronsdal [14]. Inserting equation (2.7) into equation (2.5) gives a 3-dimensional quasipotential equation

$$\Gamma_P(\hat{p}) = \frac{1}{(2\pi)^3}\int \frac{d^3k}{2E_k}\,\vartheta(\hat{p}, \hat{k}, P)\hat{g}(\hat{k}, P)\Gamma_P(\hat{k}) \tag{2.8}$$

where

$$\hat{g}(\hat{k}, P) = \frac{[\gamma\cdot(P/2 + \hat{k}) + m]^{(1)}[\gamma\cdot(P/2 - \hat{k}) + m]^{(2)}}{(P/2 - \hat{k})^2 - m^2} \tag{2.9}$$

$$\begin{aligned} &\hat{k} = (\hat{k}_0, \mathbf{k}) && \hat{p} = (\hat{p}_0, \mathbf{p}) \\ &\hat{k}_0 = E_k - P_0/2 && \hat{p}_0 = E_p - P_0/2 \\ &E_k = (m^2 + \mathbf{k}^2)^{1/2} && (P/2 - \hat{k})^2 - m^2 = -P_0(2E_k - P_0). \end{aligned} \tag{2.10}$$

In Figure 1 we give the graphical representation of the bound state vertex function

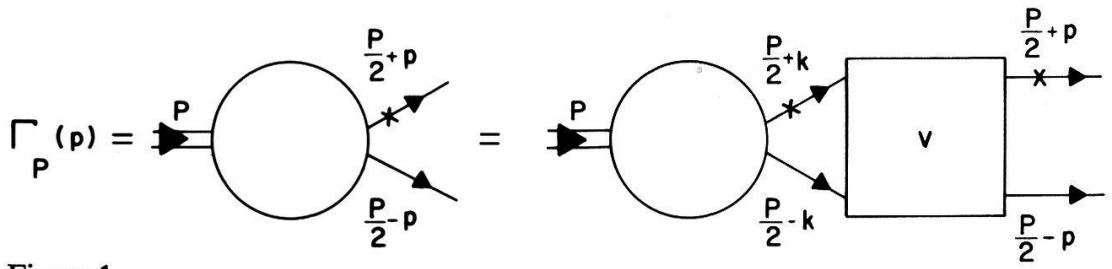

Figure 1
Graphical representation of the Gross equation (2.8) for the bound state vertex function $\Gamma_P(p)$. The symbol x on the upper nucleon line indicates that this particle is on its mass shell.

in terms of the usual Feynman diagrams with the additional restriction that particle 1 is on its mass shell according to equation (2.7). The quantity of physical interest however is the wave function of the bound state, which is related directly to the vertex function. This fact can be demonstrated by using the following identity for the positive and negative frequency projection operators on a free nucleon [15]

$$(\gamma\cdot q + m)_{\mu\nu} = \frac{m}{E_q}(E_q + q_0)\sum_{s=1}^{2} u_\mu^{(s)}(\mathbf{q})\bar{u}_\nu^{(s)}(\mathbf{q}) + \frac{m}{E_q}(q_0 - E_q)\sum_{s=1}^{2} v_\mu^{(s)}(-\mathbf{q})\bar{v}_\nu^{(s)}(-\mathbf{q}) \tag{2.11}$$

where u and v are the standard Dirac spinors which are normalized by the condition

$$\bar{u}^{(r)}(\mathbf{q})u^{(s)}(\mathbf{q}) = -\bar{v}^{(r)}(\mathbf{q})v^{(s)}(\mathbf{q}) = \delta_{rs}.$$

The solution of the quasipotential equation (2.8) gives a vertex with nucleon 1 on mass shell, while nucleon 2 is off the mass shell and can be in a particle or antiparticle state. Accordingly, one can define two wave functions (for the bound state at rest)

$$\begin{aligned} \psi^+(\mathbf{p}) &= \frac{m}{\sqrt{2M}}\frac{\bar{u}_1(\mathbf{p})\bar{u}_2(-\mathbf{p})\Gamma_P(\hat{p})}{E_p(2E_p - M)} \\ \psi^-(\mathbf{p}) &= -\frac{m}{\sqrt{2M}}\frac{\bar{u}_1(\mathbf{p})\bar{v}_2(\mathbf{p})\Gamma_P(\hat{p})}{E_p M} \\ P &= (M, 0) \end{aligned} \tag{2.12}$$

where we have used the indices 1 and 2 as a shorthand notation for spin and spinor indices. In terms of these wave functions, equation (2.8) splits into two coupled integral equations:

$$\begin{aligned} (M - 2E_p)\psi^+(\mathbf{p}) &= \frac{1}{(2\pi)^3}\int d^3k[V^{++}(\mathbf{p}, \mathbf{k}, M)\psi^+(\mathbf{k}) + V^{+-}(\mathbf{p}, \mathbf{k}, M)\psi^-(\mathbf{k})] \\ M\psi^-(\mathbf{p}) &= \frac{1}{(2\pi)^3}\int d^3k[V^{-+}(\mathbf{p}, \mathbf{k}, M)\psi^+(\mathbf{k}) + V^{--}(\mathbf{p}, \mathbf{k}, M)\psi^-(\mathbf{k})] \end{aligned} \tag{2.13}$$

and the potentials are given by

$$\begin{aligned} V^{++}(\mathbf{p}, \mathbf{k}, M) &= \frac{m^2}{E_p E_k}\bar{u}_1(\mathbf{p})\bar{u}_2(-\mathbf{p})\vartheta(\hat{p}, \hat{k}, M)u_1(\mathbf{k})u_2(-\mathbf{k}) \\ V^{+-}(\mathbf{p}, \mathbf{k}, M) &= \frac{m^2}{E_p E_k}\bar{u}_1(\mathbf{p})\bar{u}_2(-\mathbf{p})\vartheta(\hat{p}, \hat{k}, M)u_1(\mathbf{k})v_2(\mathbf{k}) \\ V^{-+}(\mathbf{p}, \mathbf{k}, M) &= \frac{m^2}{E_p E_k}\bar{u}_1(\mathbf{p})\bar{v}_2(\mathbf{p})\vartheta(\hat{p}, \hat{k}, M)u_1(\mathbf{k})u_2(-\mathbf{k}) \\ V^{--}(\mathbf{p}, \mathbf{k}, M) &= \frac{m^2}{E_p E_k}\bar{u}_1(\mathbf{p})\bar{v}_2(\mathbf{p})\vartheta(\hat{p}, \hat{k}, M)u_1(\mathbf{k})v_2(\mathbf{k}). \end{aligned} \tag{2.14}$$

The wave functions must satisfy the following normalization condition [13]:

$$Z = \frac{1}{(2\pi)^3}\int d^3p\{|\psi^+(\mathbf{p})|^2 + |\psi^-(\mathbf{p})|^2\}$$

$$- \frac{1}{(2\pi)^6}\int d^3p\, d^3q\bar{\Gamma}_P(\hat{p})\hat{g}(\hat{p}, M)\frac{\partial}{\partial M^2}[\vartheta(\hat{p}, \hat{q}, M)]\hat{g}(\hat{q}, M)\Gamma_P(\hat{q}) = 1. \quad (2.15)$$

The above equations provide a completely relativistic frame for the discussion of bound state problems, and we shall use this frame to present a consistent treatment of exchange current effects in nuclei. In order to make a comparison with nonrelativistic nuclear physics calculations, we note that the wave function ψ^+ is the solution of a relativistic Schrödinger equation with an effective potential which in general is complex, energy-dependent and nonlocal

$$(M - 2E_p)\psi^+(\mathbf{p}) = \frac{1}{(2\pi)^3}\int d^3k V_{\text{eff}}(\mathbf{p}, \mathbf{k}, M)\psi^+(\mathbf{k}). \quad (2.16)$$

A formal expression for the effective potential V_{eff} can be obtained by eliminating ψ^- from the system of integral equations (2.13) with the result

$$V_{\text{eff}} = V^{++} + V^{+-}(2m - V^{--})^{-1}V^{-+}. \quad (2.17)$$

This is *one* nuclear 'potential' obtained from a field-theoretic description, but the solution of the relativistic equation (2.16) for ψ^+ has not been accomplished as yet. We shall discuss meson exchange effects in the framework given by the relativistic wave function ψ^+ and are interested in the resulting changes of quantum mechanical predictions, which are based upon the usual wave functions of nuclear physics and these are solutions of a nonrelativistic Schrödinger equation. The difference between these two wave functions induces additional relativistic corrections.

As a preparation of the discussion of relativistic corrections of the nuclear wave function, we shall briefly give the derivation of a nonrelativistic Schrödinger equation potential, again starting from our field theoretical model. This approach has been used in Ref. [1], where the Blankenbecler–Sugar method [16] is generalized.

Instead of the relativistic propagator (2.7) Lomon and Partovi [1] use the following nonrelativistic expression for g in the center-of-momentum system of the two nucleons

$$g(k, M) = -2\pi i\delta(k_0)\frac{[\gamma_0 E_k - \boldsymbol{\gamma}\cdot\mathbf{k} + m]^{(1)}[\gamma_0 E_k + \boldsymbol{\gamma}\cdot\mathbf{k} + m]^{(2)}}{E_k(M^2 - 4m^2 - 4\mathbf{k}^2)}. \quad (2.18)$$

The function g contains the correct Schrödinger propagator and only positive frequency projection operators, as can be seen from equation (2.11). The resulting wave function will consist of only one, positive frequency component. The factor E_k in the denominator (instead of E_k^2 as one would expect from (2.7)) is necessary for a correct reduction to a Lippmann–Schwinger form and is also connected with unitarity [1].

The procedure to derive now an alternative quasipotential equation in terms of the nonrelativistic function g, equation (2.18), is the same as before. The result is a wave function

$$\varphi(\mathbf{p}) = \frac{1}{\sqrt{2M}}\sqrt{\frac{m}{E_p}}\frac{\bar{u}_1(\mathbf{p})\bar{u}_2(-\mathbf{p})\Gamma_P(\hat{\hat{p}})}{2m - M + \mathbf{p}^2/m} \quad (2.19)$$

where now

$$\hat{\hat{p}} = (\hat{\hat{p}}_0, \mathbf{p})$$
$$\hat{\hat{p}}_0 = 0 \tag{2.20}$$

which wave function is the solution of the Schrödinger equation

$$\left(2m - M + \frac{\mathbf{p}^2}{m}\right)\varphi(\mathbf{p}) = -\frac{1}{(2\pi)^3}\int d^3k V(\mathbf{p}, \mathbf{k}, M)\varphi(\mathbf{p}) \tag{2.21}$$

and the Schrödinger equation potential is given by

$$V(\mathbf{p}, \mathbf{k}, M) = \sqrt{\frac{m^2}{E_p E_k}}\, \bar{u}_1(\mathbf{p})\bar{u}_2(-\mathbf{p})\vartheta(\hat{\hat{p}}, \hat{\hat{k}}, M)u_1(\mathbf{k})u_2(-\mathbf{k}). \tag{2.22}$$

The potential operator ϑ is defined by equation (2.6) where equation (2.18) for g has to be used now. It is completely determined by the underlying field theoretic model which specifies the interaction kernel U. Comparisons of V with the standard phenomenological nuclear potentials have been made and fairly good agreement has been obtained [1, 2]. The authors of Ref. [2] conclude that this agreement improves progressively as further information on the elementary process is included. For the later applications, we shall therefore use the wave function derived from such a phenomenological potential as a reasonable approximation to the solution of the quasipotential equation (2.21).

The quantum mechanical framework constructed by means of the Blankenbecler–Sugar method in principle provides a natural basis for the discussion of meson exchange effects. However, we prefer Gross' treatment of the relativistic bound state problem, since it still allows the use of covariant perturbation theory (with minor modifications) and therefore a representation by Feynman-like diagrams instead of time ordered graphs. Another technical advantage will become apparent later, when the details of the calculation are presented. As mentioned before, this approach entails a correction of the nuclear wave function for relativistic effects, which are however well defined.

A relativistic description of the nucleus automatically takes account of its mesonic degrees of freedom. This means that the nucleus is not only a bound state of nucleons, but it can be in a state containing nucleon–antinucleon pairs (this state is explicitly described by the wave function component ψ^-) or pions, or we can have a bound state of nucleons and nucleon resonances. Therefore, the normalization of the wave function ψ^+ is not unity, but is given by equation (2.15). We shall see below that the one boson exchange part of the quasipotential $\vartheta(\hat{p}, \hat{k}, M)$ is independent of the mass M of the bound state, but the many boson exchange contribution to ϑ makes it depend upon M, and it is here that the above mentioned mesonic effects affect the normalization of the wave function. This normalization will be considered on the same footing with other meson exchange effects, which we are going to discuss in the next section.

3. The Matrix Element of a Current between Bound States

Mandelstam has shown how to calculate matrix elements for bound states in the framework of the Bethe–Salpeter equation [3]. His approach can be used also with minor modifications in the quasipotential formalism (see e.g. Ref. [4] where further references can be found).

Following Mandelstam, we consider the Fourier transform of the five-point function

$$R_\mu(p_1, p_2; q_1, q_2) = \int d^4x_1\, d^4x_2\, d^4y_1\, d^4y_2$$
$$\times\, e^{ip_1\cdot x_1} e^{ip_2\cdot x_2} e^{-iq_1\cdot y_1} e^{-iq_2\cdot y_2} R_\mu(x_1x_2; y_1y_2)$$
$$R_\mu(x_1x_2; y_1y_2) = \langle 0|T\{\varphi_1(x_1)\varphi_2(x_2)J_\mu(0)\bar{\varphi}_1(y_1)\bar{\varphi}_2(y_2)\}|0\rangle \tag{3.1}$$

where $\varphi_i(x)$ is the Heisenberg field of the i-th nucleon and $J_\mu(x)$ is the operator of a vector or axial vector current (the derivation holds for any operator). Again, we restrict the domain of the function R by putting particle one on the mass shell and define

$$\hat{R}_\mu(\hat{p}, \hat{q}; P, Q) = \lim_{\substack{p_1^2 = q_1^2 = m^2 \\ p_{10} > 0, p_{20} > 0}} (p_1^2 - m^2)(q_1^2 - m^2) R_\mu(p_1, p_2; q_1, q_2) \tag{3.2}$$

where in analogy to equation (2.10), we put

$$\begin{aligned} p_1 &= P/2 + \hat{p} & q_1 &= Q/2 + \hat{q} \\ p_2 &= P/2 - \hat{p} & q_2 &= Q/2 - \hat{q} \\ \hat{p} &= (\hat{p}_0, \mathbf{p}) & \hat{q} &= (\hat{q}_0, \mathbf{q}) \\ \hat{p}_0 &= E_p - P_0/2 & \hat{q}_0 &= E_q - Q_0/2. \end{aligned} \tag{3.3}$$

Similarly, we consider the Fourier transform $K(p_1, p_2; p_1', p_2')$ of the propagator

$$K(x_1, x_2; x_1', x_2') = \langle 0|T\{\varphi_1(x_1)\varphi_2(x_2)\bar{\varphi}_1(x_1')\bar{\varphi}_2(x_2')\}|0\rangle \tag{3.4}$$

and define

$$\hat{K}(\hat{p}, \hat{p}'; P) = \lim_{\substack{p_1^2 = p_1'^2 = m^2 \\ p_{10} > 0, p_{10}' > 0}} (p_1^2 - m^2) K(p_1, p_2; p_1', p_2'). \tag{3.5}$$

Before we continue, we note that the usual matrix products, e.g. equation (2.6), include integrations over the full range of momenta of intermediate states except for conservation of the total four momentum. This point is illustrated by the explicit form of the Bethe–Salpeter equation (2.1). The requirement that particle 1 in intermediate two nucleon states be put on its mass shell restricts the integration over the momenta, as can be seen in the Gross equation (2.8). If we introduce the convention that the following matrix products are to be carried out according to the above prescription, namely that particle 1 is on shell, the integration over the momenta of the intermediate two-nucleon state is given by

$$\sum_{p_1, p_2} = \frac{1}{(2\pi)^3} \int d^4p_1\, d^4p_2\, \delta(p_1^2 - m^2)\delta^4(P - p_1 - p_2) = \frac{1}{(2\pi)^3} \int \frac{d^3p}{2E_p}. \tag{3.6}$$

In order to establish an expression for the matrix element of the current operator J_μ between bound states in terms of the bound state wave functions, Mandelstam [3] introduced the many particle current Λ_μ with the help of the operator equality

$$\hat{R}_\mu(P, Q) = \hat{K}(P)\Lambda_\mu(P, Q)\hat{K}(Q) \tag{3.7}$$

and the matrix element of the current operator $J_\mu(0)$ between the bound states is then given by

$$\langle P|J_\mu(0)|Q\rangle = \frac{1}{(2\pi)^6}\int \frac{d^3p}{2E_p}\frac{d^3q}{2E_q}\,\bar{\Gamma}_P(\hat{p})\hat{g}(\hat{p}, P)\Lambda_\mu(\hat{p}, \hat{q}; P, Q)\hat{g}(\hat{q}, Q)\Gamma_Q(\hat{q})$$
$$P^2 = Q^2 = M^2 \tag{3.8}$$

where Γ is the bound state vertex function, equation (2.8), and $\hat{g}$ the free 2-particle Green's function, equation (2.9). In Figure 2 we have drawn diagrams that represent

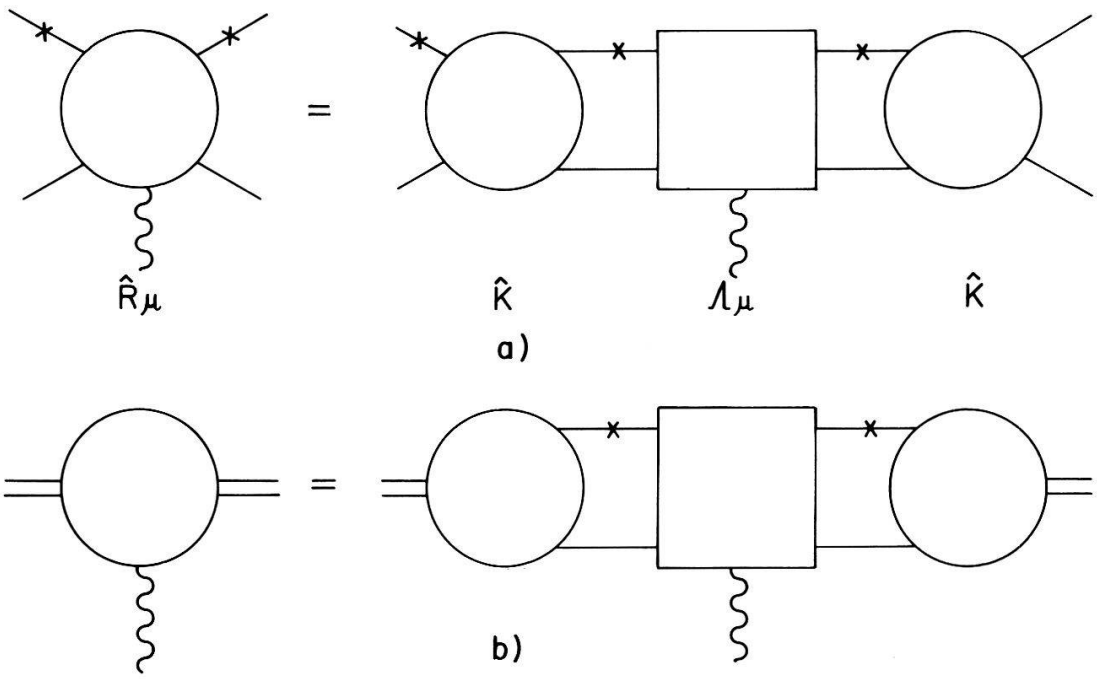

Figure 2
Feynman-like diagrams whose interpretation is the same as of those of Figure 1. (a) Definition of the 2-nucleon current Λ_μ, equation (3.7). (b) The matrix element of the current operator J_μ between bound states is expressed in terms of the 2-nucleon current Λ_μ, equation (3.8).

equations (3.7) and (3.8). Using equations (2.12), the matrix element given in equation (3.8) can be expressed with the help of the wave function components ψ^+ and ψ^-:

$$\langle P|J_\mu(0)|Q\rangle = \frac{1}{2M}\frac{1}{(2\pi)^6}\int d^3p\, d^3q$$
$$\times \{\bar{\psi}_P^+(\mathbf{p})\Lambda_\mu^{+\,+}(\mathbf{p}, \mathbf{q}; P, Q)\psi_Q^+(\mathbf{q}) + \bar{\psi}_P^+(\mathbf{p})\Lambda_\mu^{+\,-}(\mathbf{p}, \mathbf{q}; P, Q)\psi_Q^-(\mathbf{q})$$
$$+ \bar{\psi}_P^-(\mathbf{p})\Lambda_\mu^{-\,+}(\mathbf{p}, \mathbf{q}; P, Q)\psi_Q^+(\mathbf{q}) + \bar{\psi}_P^-(\mathbf{p})\Lambda_\mu^{-\,-}(\mathbf{p}, \mathbf{q}; P, Q)\psi_Q^-(\mathbf{q})\} \tag{3.9}$$

where the functions $\Lambda_\mu^{\pm\,\pm}(\mathbf{p}, \mathbf{q}; P, Q)$ are defined in complete analogy to equation (2.14). The definition (3.7) completely determines the 2-nucleon current Λ_μ since the five-point function $\hat{R}_\mu$ and the propagator $\hat{K}$ are known in the form of power series expansions, which series can be represented by Feynman diagrams. In order to derive the perturbation series for the 2-nucleon current Λ_μ, we use the following operator equation for $\hat{K}$ [14]

$$\hat{K}(P) = [\hat{g}^{-1}(P) - \vartheta(P)]^{-1} \tag{3.10}$$

where ϑ is the quasipotential, equation (2.6), and finally obtain the equation for Λ_μ

$$\Lambda_\mu(P, Q) = [\hat{g}^{-1}(P) - \vartheta(P)]\hat{R}_\mu(P, Q)[\hat{g}^{-1}(Q) - \vartheta(Q)]. \tag{3.11}$$

We expand now all quantities in a series the terms of which correspond to the number of bosons exchanged between the two nucleons

$$\begin{aligned}
\Lambda_\mu &= \Lambda_\mu^{(0)} + \Lambda_\mu^{(1)} + \Lambda_\mu^{(2)} + \cdots \\
\vartheta &= \vartheta^{(1)} + \vartheta^{(2)} + \cdots \\
\hat{R}_\mu &= R_\mu^{(0)} + R_\mu^{(1)} + R_\mu^{(2)} + \cdots \\
\langle P|J_\mu(0)|Q\rangle &= \langle P|J_\mu(0)|Q\rangle_{(0)} + \langle P|J_\mu(0)|Q\rangle_{(1)} + \cdots
\end{aligned} \tag{3.12}$$

and find

$$\Lambda_\mu^{(0)}(P, Q) = \hat{g}^{-1}(P)\hat{R}_\mu^{(0)}(P, Q)\hat{g}^{-1}(Q). \tag{3.13}$$

In this order, there is no interaction between the two nucleons and $\Lambda_\mu^{(0)}$ corresponds to the diagram of Figure 3a, which is meant to include all radiative corrections (by this we mean all higher-order Feynman graphs in which each extra meson is emitted and absorbed by the same nucleon line). These radiative corrections can in principle be accounted for by using the correct form factor for the interaction of the off-shell nucleon with the current J_μ. When inserted into the matrix element (3.9) $\Lambda_\mu^{(0)}$ gives rise to the impulse approximation.

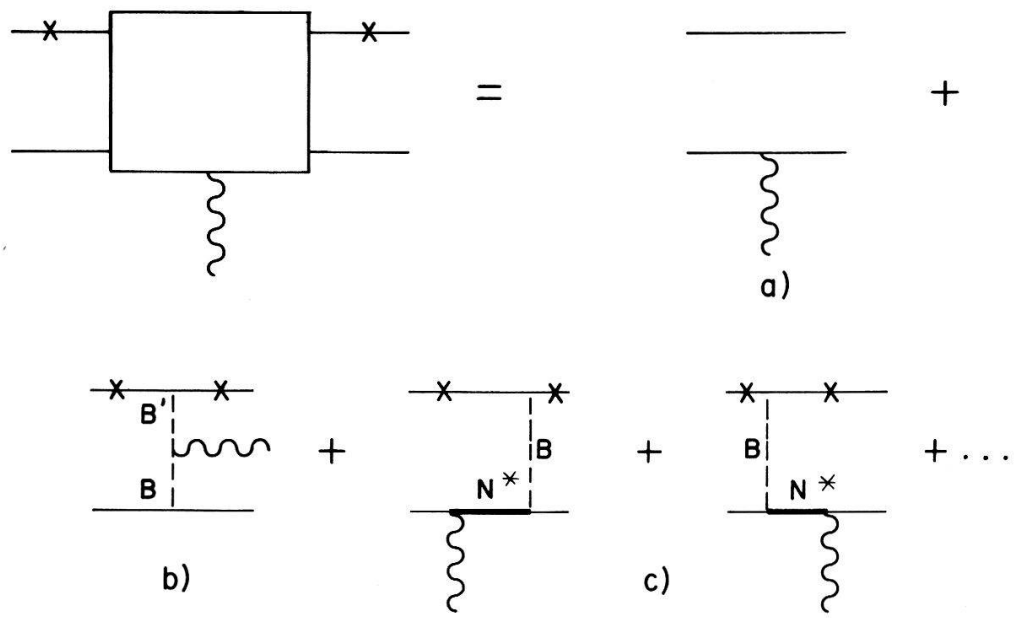

Figure 3
Diagrams representing the 2-nucleon current Λ_μ as a sum of the impulse approximation term and many boson exchange currents (only the OBE currents have been drawn). The letter B stands for π, ρ, ω, etc., and N^* for the nucleon isobars.

In first order, we have the sum of all terms with one boson exchanged between the nucleons:

$$\begin{aligned}
\Lambda_\mu^{(1)} &= \hat{g}^{-1}\hat{R}_\mu^{(1)}\hat{g}^{-1} - \vartheta^{(1)}\hat{R}_\mu^{(0)}\hat{g}^{-1} - \hat{g}^{-1}\hat{R}_\mu^{(0)}\vartheta^{(1)} \\
&= \hat{g}^{-1}\hat{R}_\mu^{(1)}\hat{g}^{-1} - \vartheta^{(1)}\hat{g}\Lambda_\mu^{(0)} - \Lambda_\mu^{(0)}\hat{g}\vartheta^{(1)}.
\end{aligned} \tag{3.14}$$

This is the proper one-boson exchange current which is induced by the particular

choice of wave function in this paper, and in general depends upon the approach used to define a 'potential'. Some typical terms of this order have been represented in Figure 3b and c. The two-boson exchange current is formally given by

$$\begin{aligned}\Lambda_\mu^{(2)} = {} & \hat{g}^{-1}\hat{R}_\mu^{(2)}\hat{g}^{-1} - \vartheta^{(2)}\hat{g}\Lambda_\mu^{(0)} - \Lambda_\mu^{(0)}\hat{g}\vartheta^{(2)} \\ & - \vartheta^{(1)}\hat{g}\Lambda_\mu^{(1)} - \Lambda_\mu^{(1)}\hat{g}\vartheta^{(1)} + \vartheta^{(1)}\hat{g}\Lambda_\mu^{(0)}\hat{g}\vartheta^{(1)}\end{aligned} \tag{3.15}$$

and the graphs of this order have been drawn in Figure 4. We wish to point out that the matrix element (3.8) of the complete box diagram of Figure 4a can be partly reduced to the matrix element of Figure 3a by using the Gross equation, Figure 1. The 'reducible' part of the box diagram is represented in Figure 4c and only the

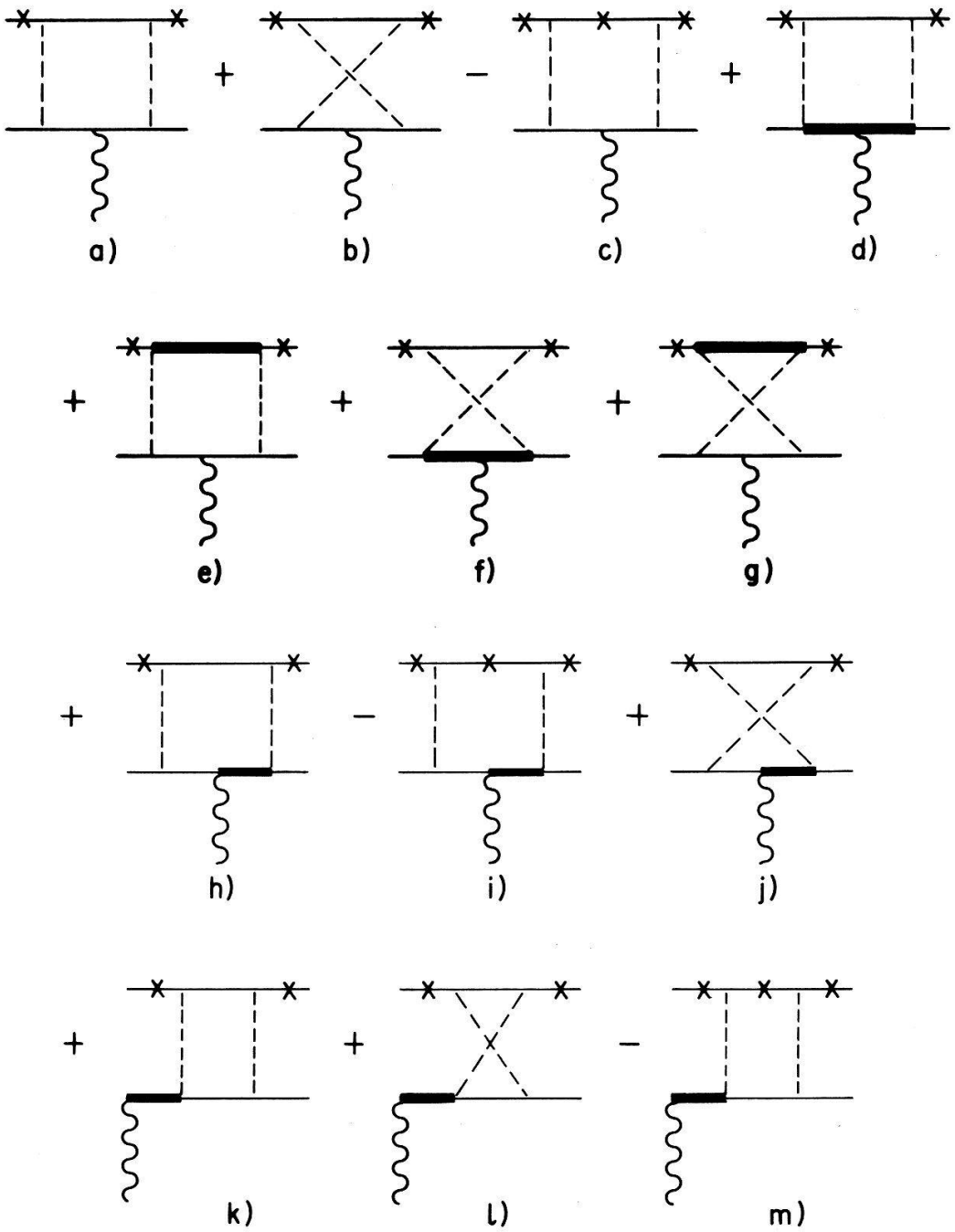

Figure 4
Diagrams that contribute to the TBE current $\Lambda_\mu^{(2)}$. Solid double lines represent nucleon isobars N^* in virtual states.

difference of these two terms gives an 'irreducible' contribution to the TBE current. The same argument holds for the box graphs of Figure 4h and i. These remarks should illustrate how the series of diagrams which represent the interaction of a system of two unbound nucleons with a current, as given in terms of the five-point function by the operator $\hat{g}^{-1}\hat{R}_\mu\hat{g}^{-1}$, have to be modified if these two nucleons are bound, to take into account that a well defined class of diagrams is already properly included in the bound state vertex by means of the integral equation for the vertex function (represented in Figure 1). These reducible diagrams are removed from the 2-nucleon current by the additional terms in the equations for $\Lambda_\mu^{(n)}$. The formal derivation of the 2-nucleon current presented here, of course includes the effect of radiative corrections. This means that besides the meson exchange graphs drawn in Figures 3 and 4, there exist higher order diagrams, which we have not drawn, which represent the radiative corrections to meson exchange currents. But radiative corrections to one and many boson exchange graphs can no longer be treated in an exact manner. This difficulty usually is circumvented for the OBE current by using low-energy theorems for this process [5, 10]. These low-energy theorems are derived from current algebra, the hypotheses of a conserved vector current (CVC) and a partial conservation of the axial-vector current (PCAC), and the additional assumption that the complete set of intermediate states inserted in the equal-time commutation relations can be saturated by a few low-lying single-particle states. This means in our case that the OBE current is well described by including the diagrams of Figure 3c with intermediate states N^* corresponding to nucleon isobars. We shall adopt the same procedure for many boson exchange currents and absorb the effect of radiative corrections by admitting nucleon isobars in intermediate states, and using physical masses and coupling constants.

Up to now, we have derived the matrix element of a current J_μ between a two-nucleon bound state in terms of the two-nucleon current Λ_μ. In general, the matrix element between a many nucleon bound state is a sum of two, three and more nucleon currents, which are derived in exactly the same way as the two-nucleon current. We shall present explicit calculations for the three-nucleon bound state and the corresponding matrix element has been drawn in Figure 5. In this paper, we shall consider only the two-nucleon current contribution to this matrix element and neglect the three-nucleon current (compare Figure 6). In this approximation, the third nucleon is a spectator and is accounted for by an additional integration and summation variable in the preceding formulas.

In order to see this more clearly, let $\mathbf{p}_1$, $\mathbf{p}_2$, $\mathbf{p}_3$ be the three momenta of the three particles and introduce the new variables

$$\mathbf{p} = \mathbf{p}_1 + \mathbf{p}_2 + \mathbf{p}_3, \quad \mathbf{k}_1 = \tfrac{1}{2}(\mathbf{p}_1 - \mathbf{p}_2), \quad \mathbf{q}_1 = \tfrac{2}{3}\mathbf{p}_3 - \tfrac{1}{3}(\mathbf{p}_1 + \mathbf{p}_2) \tag{3.16}$$

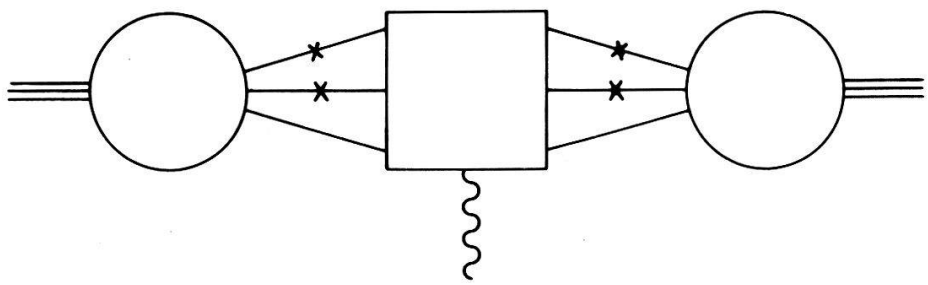

Figure 5
The matrix element of the current operator $J_\mu(x)$ between three-nucleon bound states. Two of the three bound nucleons are on their respective mass shells.

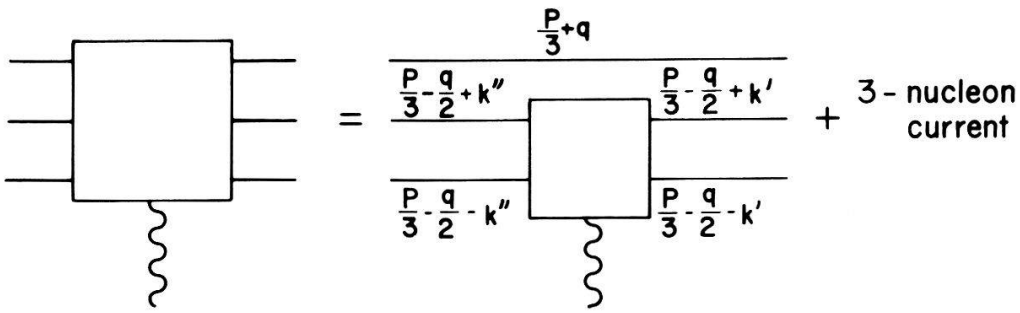

Figure 6
The many body current of Figure 5 is represented as a sum of a 2-nucleon current and a 3-nucleon current. The 2-nucleon current has been represented in Figures 3 and 4. The momentum variables have been chosen according to equation (3.17).

and their cyclic permutations $\mathbf{k}_2$, $\mathbf{q}_2$ and $\mathbf{k}_3$, $\mathbf{q}_3$. The vector $\mathbf{p}$ is the total momentum, $\mathbf{k}_1$ is the relative momentum between particles 2 and 3 and $\mathbf{q}_1$ is the relative momentum of the particle 1, the spectator particle, with respect to the cluster 2 – 3. These variables are the most suitable ones for our purposes and any pair $\{k_i, q_i\}$ can be used for the description of the system. The following relation will be useful also

$$\mathbf{p}_1 = \tfrac{1}{3}\mathbf{p} + \mathbf{q}_1, \quad \mathbf{p}_2 = \tfrac{1}{3}\mathbf{p} - \tfrac{1}{2}\mathbf{q}_1 + \mathbf{k}_1, \quad \mathbf{p}_3 = \tfrac{1}{3}\mathbf{p} - \tfrac{1}{2}\mathbf{q}_1 - \mathbf{k}_1. \tag{3.17}$$

The matrix element of the current operator J_μ between three particle bound states in the rest system, i.e. for $\mathbf{P} = \mathbf{Q} = 0$, is given by

$$\begin{aligned}\langle P|J_\mu(0)|Q\rangle = {} & \frac{1}{2M}\frac{1}{(2\pi)^9}\frac{1}{2}\sum_{i\neq j\neq l}\int d^3p_1'\, d^3p_2'\, d^3p_3'\,\delta(\mathbf{p}_1' + \mathbf{p}_2' + \mathbf{p}_3') \\ & \times \int d^3p_1''\, d^3p_2''\, d^3p_3''\,\delta(\mathbf{p}_1'' + \mathbf{p}_2'' + \mathbf{p}_3'')\delta(\mathbf{p}_l' - \mathbf{p}_l'') \\ & \times \{\bar{\psi}_P^+(\mathbf{p}_1'', \mathbf{p}_2'', \mathbf{p}_3'')\Lambda_{\mu,ij}^{++}(\mathbf{p}_i'', \mathbf{p}_j'', \mathbf{p}_i', \mathbf{p}_j'; P, Q)\psi_Q^+(\mathbf{p}_1', \mathbf{p}_2', \mathbf{p}_3') + \cdots\} \\ & + \text{3-nucleon current}\end{aligned} \tag{3.18}$$

which in terms of the new variables (3.16) reads

$$\begin{aligned}\langle P|J_\mu(0)|Q\rangle = {} & \frac{1}{2M}\frac{1}{(2\pi)^9}\frac{1}{2}\sum_{i\neq j\neq l}\int d^3q_l\, d^3k_l'\, d^3k_l'' \\ & \times \{\bar{\psi}_P^+(\mathbf{q}_l, \mathbf{k}_l'')\Lambda_{\mu,ij}^{++}(\mathbf{k}_l'', \mathbf{k}_l', \mathbf{q}_l; P, Q)\psi_Q^+(\mathbf{q}_l, \mathbf{k}_l') + \cdots\} \\ & + \text{3-nucleon current}\end{aligned} \tag{3.19}$$

where $\Lambda_{\mu,ij}$ is the two-nucleon current of particles i and j as shown in Figure 6. In writing down equations (3.18) and (3.19), we have for brevity omitted those terms formed with the functions $\Lambda_{\mu,ij}^{+-}$, $\Lambda_{\mu,ij}^{-+}$ and $\Lambda_{\mu,ij}^{--}$, but these can easily be read from equation (3.9).

4. Exchange Currents in the Triton Beta Decay

We shall now discuss the contributions to the matrix element of the current J_μ according to the number of bosons exchanged between two nucleons, and we have given the corresponding Feynman graphs in Figures 3 and 4. The many boson exchange potentials induce a renormalization of the nuclear wave function, equation (2.15), which we shall calculate simultaneously.

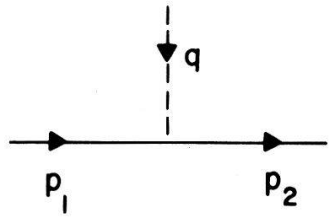

Figure 7
Vertex corresponding to the reaction $N + \pi \to N$.

For the πNN vertex of Figure 7 we use a coupling of the form

$$ig_\pi \tau_n(\lambda\gamma_5 + (1 - \lambda)\frac{1}{2m}\gamma\cdot q\gamma_5) \tag{4.1}$$

which is a linear superposition of pseudoscalar and pseudovector couplings with $0 < \lambda < 1$. This choice of coupling could serve, if necessary, as a convenient means of suppressing the influence of antinucleon states in the domain of nuclear physics. In order to see this more clearly, let us consider the πNN vertex in the limit of non-relativistic nucleons

$$\bar{u}(\mathbf{p}_2)(\lambda\gamma_5 + (1 - \lambda)\frac{1}{2m}\gamma\cdot q\gamma_5)u(\mathbf{p}_1) \to -\frac{\boldsymbol{\sigma}\mathbf{q}}{2m} \tag{4.2}$$

$$\bar{v}(-\mathbf{p}_2)(\lambda\gamma_5 + (1 - \lambda)\frac{1}{2m}\gamma\cdot q\gamma_5)u(\mathbf{p}_1) \to -\lambda + (1 - \lambda)\frac{q_0}{2m} \qquad q = p_2 - p_1. \tag{4.3}$$

According to equation (4.2) the coupling between nucleons is independent of λ, while equation (4.3) shows that the nucleon–antinucleon coupling is reduced by a factor λ compared with the conventional pseudoscalar coupling. (Usually the virtual nucleons are not very far off the mass shell and therefore $q_0 \ll 2m$.) The coupling (4.1) is used too by Gross [13] who evaluates potentials for a simple one particle exchange model and compares them with Reid's soft core potentials. For these fits, Gross took $\lambda = 0.41$. We shall not choose here a specific value for λ but shall discuss below, when the final result is obtained, which value is consistent with experiment. In the meantime, the parameter λ can be used to trace the negative energy contributions.

As a realistic example for the application of the formal developments of the two preceding sections, we choose the beta decay of the three nucleon system

$$^3\mathrm{H} \to {}^3\mathrm{He} + e^- + \bar{\nu}_e. \tag{4.4}$$

The ft value for this decay is

$$ft = \frac{2\pi^3 \ln 2}{G(|M_F|^2 + g_A|M_A|^2)} \tag{4.5}$$

where G is the vector coupling constant and $g_A = 1.23$. The Fermi matrix element M_F is equal to 1 and the conserved vector current theory guarantees that there are no meson exchange corrections for M_F. More exactly: the exchange current contributions are cancelled exactly by the normalization correction of the wave function (see Section 5 for further details). The Gamow–Teller matrix element M_A however is modified by exchange current effects and we shall discuss these effects in the following.

4.1. *The one nucleon current*

We shall first treat the case where there is no boson exchanged between the nucleons. The matrix element of the axial current $A_\mu^{(n)}(x)$, where $n = 1, 2, 3$ is an isospin index, between the decaying state ^{3}H with four momentum Q and the daughter state ^{3}He with four momentum P (graphically represented in Figure 8) is given by equation (3.18).

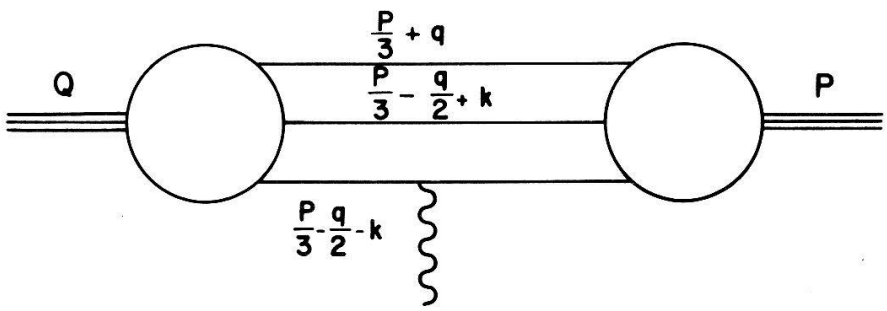

Figure 8
Lowest order contribution (impulse approximation) to the matrix element of the current $J_\mu(x)$ between three-nucleon bound states with four momentum $P = Q$.

We neglect the mass difference between initial and final state and evaluate the matrix element in the rest system

$$P = Q = (M, 0, 0, 0)$$

and find using (3.11) and (3.12)

$$\begin{aligned}
&\langle P|A_\mu^{(+)}(0)|Q\rangle_{(0)} \\
&\quad = \frac{1}{2M}\frac{g_A}{(2\pi)^6}\sum_{i=1}^{3}\int d^3p_1\, d^3p_2\, d^3p_3\,\delta(\mathbf{p}_1 + \mathbf{p}_2 + \mathbf{p}_3)\frac{m}{E_i} \\
&\qquad \times \{\bar{\psi}_P^+(\mathbf{p}_1, \mathbf{p}_2, \mathbf{p}_3)\bar{u}_i(\mathbf{p}_i)\gamma_\mu\gamma_5\tau_+ u_i(\mathbf{p}_i)\psi_Q^+(\mathbf{p}_1, \mathbf{p}_2, \mathbf{p}_3) \\
&\qquad\quad + \bar{\psi}_P^+(\mathbf{p}_1, \mathbf{p}_2, \mathbf{p}_3)\bar{u}_i(\mathbf{p}_i)\gamma_\mu\gamma_5\tau_+ v_i(-\mathbf{p}_i)\psi_Q^-(\mathbf{p}_1, \mathbf{p}_2, \mathbf{p}_3) \\
&\qquad\quad + \bar{\psi}_P^-(\mathbf{p}_1, \mathbf{p}_2, \mathbf{p}_3)\bar{v}_i(-\mathbf{p}_i)\gamma_\mu\gamma_5\tau_+ u_i(\mathbf{p}_i)\psi_Q^+(\mathbf{p}_1, \mathbf{p}_2, \mathbf{p}_3) \\
&\qquad\quad + \bar{\psi}_P^-(\mathbf{p}_1, \mathbf{p}_2, \mathbf{p}_3)\bar{v}_i(-\mathbf{p}_i)\gamma_\mu\gamma_5\tau_+ v_i(-\mathbf{p}_i)\psi_Q^-(\mathbf{p}_1, \mathbf{p}_2, \mathbf{p}_3)\}
\end{aligned} \tag{4.6}$$

where $A_\mu^{(+)} = A_\mu^{(1)} + iA_\mu^{(2)}$ and $E_i = (m^2 + p_i^2)^{1/2}$. For nonrelativistic nucleons, the bilinear covariants in equation (4.6) can be reduced in the following way

$$\frac{m}{E_i}\bar{u}_i(\mathbf{p}_i)\gamma_0\gamma_5\tau_+ u_i(\mathbf{p}_i) = \frac{\mathbf{p}_i\boldsymbol{\sigma}_i}{m}(\tau_i)_+ + 0\left(\frac{p_i^3}{m^3}\right)$$

$$\begin{aligned}
&\frac{m}{E_i}\bar{u}_i(\mathbf{p}_i)\gamma_m\gamma_5\tau_+ u_i(\mathbf{p}_i) \\
&\quad = (\sigma_i)_m(\tau_i)_+ + \frac{1}{2m^2}[p_{im}\boldsymbol{\sigma}_i\mathbf{p}_i - \mathbf{p}_i^2(\sigma_i)_m](\tau_i)_+ + 0\left(\frac{p_i^4}{m^4}\right)
\end{aligned} \tag{4.7a}$$

$$\frac{m}{E_i}\bar{u}_i(\mathbf{p}_i)\gamma_m\gamma_5\tau_+ v_i(-\mathbf{p}_i) = -i\frac{(\mathbf{p}_i \times \boldsymbol{\sigma}_i)_m}{m}(\tau_i)_+ + 0\left(\frac{p_i^3}{m^3}\right) \tag{4.7b}$$

$$\frac{m}{E_i}\bar{v}_i(-\mathbf{p}_i)\gamma_m\gamma_5\tau_+ v_i(-\mathbf{p}_i) = (\sigma_i)_m(\tau_i)_+ + 0\left(\frac{p_i^2}{m^2}\right). \tag{4.7c}$$

We see that the first term of equation (4.6) corresponds to the Gamow–Teller (GT) matrix element without exchange current corrections, but including relativistic corrections. The second and third term is the pair excitation current discussed in Ref. [5], while the fourth term has not been discussed in the literature thus far.

4.1.1. The Gamow–Teller matrix element without exchange currents

In calculating the GT matrix element using (4.7a), we include the relativistic terms of order p_i^2/m^2 induced by the space components of the axial vector current $A_\mu^{(+)}$ and the contribution from $A_0^{(+)}$, and find

$$M_A^{(1)}(1 + \delta'_{\text{rel}}) = \frac{1}{(2\pi)^6} \left| \sum_{i=1}^{3} \int d^3p_1\, d^3p_2\, d^3p_3 \delta(\mathbf{p}_1 + \mathbf{p}_2 + \mathbf{p}_3) \right.$$
$$\left. \times \left(1 - \frac{1}{6}\frac{\mathbf{p}_i^2}{m^2}\right) \bar{\psi}^+(\mathbf{p}_1, \mathbf{p}_2, \mathbf{p}_3) \boldsymbol{\sigma}_i(\tau_i)_+ \psi^+(\mathbf{p}_1, \mathbf{p}_2, \mathbf{p}_3) \right| \tag{4.8}$$

where we write for the uncorrected GT matrix element

$$\mathbf{M}_A^{(1)} = (\varphi^{^3\text{He}}, \sum_i \boldsymbol{\sigma}_i(\tau_i)_+ \varphi^{^3\text{H}}). \tag{4.9a}$$

We have expressed $M_A^{(1)}$ as usual in terms of the ordinary wave function of nuclear physics φ which is the solution of a nonrelativistic Schrödinger equation, as given in equations (2.19) and (2.21). The ground state wave functions of ^{3}He and ^{3}H are superpositions of a dominant spatially symmetric S-state component and small D- and antisymmetric S'-state components

$$\varphi = \varphi_S + \varphi_{S'} + \varphi_D \tag{4.9b}$$

which gives for the GT matrix element (4.9a)

$$M_A^{(1)} = \sqrt{3}(|\varphi_S|^2 - \tfrac{1}{3}|\varphi_{S'}|^2 + \tfrac{1}{3}|\varphi_D|^2). \tag{4.9c}$$

Following Ref. [8], we shall choose the values for the probabilities given below

$$|\varphi_S|^2 = 0.897, \quad |\varphi_{S'}|^2 = 0.017, \quad |\varphi_D|^2 = 0.086. \tag{4.9d}$$

The symmetric S-state wave function can be written as a product of the totally antisymmetric spin–isospin function ψ^{mt} and the radial function R (see Appendix 1, equation (A1.8))

$$\varphi_S = \psi^{mt} R.$$

Since we shall study exchange current effects in the S-state, it is convenient for later applications to define the following matrix element

$$\mathbf{M}_A^{(0)} = \left\langle \psi^{m't'} \left| \sum_{i=1}^{3} \boldsymbol{\sigma}_i(\tau_i)_+ \right| \psi^{mt} \right\rangle, \quad |\mathbf{M}_A^{(0)}| = M_A^{(0)} = \sqrt{3} \tag{4.9e}$$

where the expression $M_A^{(0)}$ has been obtained after the proper summation over the spin directions m and m'.

The equation (4.8) consequently defines the relativistic correction δ'_{rel}, since the relativistic wave function ψ^+ is known in principle. This means that the relations (2.12)

and (2.19), which define ψ^+ and φ can be used to express the matrix element of equation (4.8) in terms of the nonrelativistic wave function φ. Generalizing equations (2.12) and (2.19) for three particle bound states, we can write

$$\psi^+(\mathbf{p}_1, \mathbf{p}_2, \mathbf{p}_3) = \sqrt[4]{\frac{m^3}{E_1E_2E_3}}\,\frac{3m - M + \mathbf{p}_1^2/2m + \mathbf{p}_2^2/2m + \mathbf{p}_3^2/2m}{E_1 + E_2 + E_3 - M} \times \varphi(\mathbf{p}_1, \mathbf{p}_2, \mathbf{p}_3) + \Delta\varphi \tag{4.10}$$

with $\mathbf{p}_1 + \mathbf{p}_2 + \mathbf{p}_3 = 0$. The additional term $\Delta\varphi$ accounts for the fact that the operator function Γ has different arguments for ψ^+ and φ. The essential contribution to $\Delta\varphi$ comes from the fact that ψ^+ and φ are determined by different potentials. It is sufficient for our purpose to consider only the one pion exchange parts of the two potentials, which are essentially given by

$$\frac{1}{m_\pi^2 + (\mathbf{k}' - \mathbf{k})^2 - (\hat{k}_0' - \hat{k}_0)} \qquad \text{for } \psi^+ \tag{4.11a}$$

and

$$\frac{1}{m_\pi^2 + (\mathbf{k}' - \mathbf{k})^2} \qquad \text{for } \varphi \tag{4.11b}$$

where $\hat{k}_0$ and $\hat{k}_0'$ have been defined in (4.10). We shall show in Appendix 2 that the contribution from $\Delta\varphi$ results into a very small relativistic correction to the GT matrix element of -0.03%. The discussion of the kinematic factor in equation (4.10) is much easier, since using a triton binding energy $\epsilon = 8.5$ MeV and a mean value of v/c for a nucleon in ^{3}H or ^{3}He of 0.12 [8], and with

$$\sqrt[4]{\frac{m^3}{E_1E_2E_3}}\,\frac{\epsilon + \mathbf{p}_1^2/2m + \mathbf{p}_2^2/2m + \mathbf{p}_3^2/2m}{E_1 + E_2 + E_3 - M} \geqslant 1 - \frac{\mathbf{p}_1^2 + \mathbf{p}_2^2 + \mathbf{p}_3^2}{12m^2} - \frac{\epsilon}{12m}$$

$$\epsilon = 3m - M \tag{4.12}$$

it is seen that the relativistic correction is small. Therefore, it is sufficient to calculate it for the symmetric S-state only and if we neglect $\Delta\varphi$ in equation (4.10), we can rewrite equation (4.8) in the following way

$$M_A^{(1)}(1 + \delta_{\text{rel}}') = \frac{1}{(2\pi)^6}\left|\int d^3p_1\, d^3p_2\, d^3p_3\,\delta(\mathbf{p}_1 + \mathbf{p}_2 + \mathbf{p}_3)\left(1 - \frac{1}{6}\frac{\mathbf{p}_1^2}{m^2}\right)\varphi^*(\mathbf{p}_1, \mathbf{p}_2, \mathbf{p}_3) \times \sum_{i=1}^{3} \boldsymbol{\sigma}_i(\tau_i)_+\varphi(\mathbf{p}_1, \mathbf{p}_2, \mathbf{p}_3)\right| |\psi^+|^2 \tag{4.13a}$$

$$|\psi^+|^2 = \frac{1}{(2\pi)^6}\int d^3p_1\, d^3p_2\, d^3p_3\,\delta(\mathbf{p}_1 + \mathbf{p}_2 + \mathbf{p}_3)|\psi^+(\mathbf{p}_1, \mathbf{p}_2, \mathbf{p}_3)|^2. \tag{4.13b}$$

This factor $|\psi^+|^2$ is cancelled by the same factor which appears in the normalization condition for the wave function (2.15), and the only surviving relativistic correction

δ_{rel} of the GT matrix element $M_A^{(1)}$ is obtained from equation (4.13) by omitting $|\psi^+|^2$:

$$M_A^{(1)}(1 + \delta_{\text{rel}}) = \frac{1}{(2\pi)^6} \left| \int d^3p_1\, d^3p_2\, d^3p_3 \delta(\mathbf{p}_1 + \mathbf{p}_2 + \mathbf{p}_3)\left(1 - \frac{1}{6}\frac{\mathbf{p}_1^2}{m^2}\right)\varphi^*(\mathbf{p}_1, \mathbf{p}_2, \mathbf{p}_3) \times \sum_{i=1}^{3} \boldsymbol{\sigma}_i(\tau_i)_+ \varphi(\mathbf{p}_1, \mathbf{p}_2, \mathbf{p}_3) \right|; \qquad \delta_{\text{rel}} = -0.24\% \tag{4.14}$$

where the above mentioned mean value of 0.12 for v/c has been used.

From now on, we shall discuss matrix elements of exchange currents and the above result shows that we need then no longer distinguish between ψ^+ and φ. In practice, this means that we can safely calculate matrix elements in the nonrelativistic approximation.

4.1.2. Matrix elements with wave function ψ^-

For the remaining part of the matrix element (4.6), we need to know the wave function component ψ^-, which is given by equation (2.13). The solution for ψ^- in terms of ψ^+ is an infinite series, which we approximate by that term which corresponds to the exchange of one pion (OPE), i.e. we neglect those terms describing the exchange of two and more pions and of vector bosons. Generalizing equations (2.12) and (2.13) for the three particle bound state, using the variables defined in (3.16), we have in the OPE approximation (see Figure 8 for the kinematics)

$$\psi^-(\mathbf{q}_3, \mathbf{k}_3) = -\frac{m^{3/2}}{\sqrt{2M}} \frac{\bar{u}_3(\mathbf{q}_3)\bar{u}_1(-\frac{1}{2}\mathbf{q}_3 + \mathbf{k}_3)\bar{v}_2(\frac{1}{2}\mathbf{q}_3 + \mathbf{k}_3)\Gamma_p(\hat{q}_3, \hat{k}_3)}{\sqrt{E_1E_2E_3}(M - E_1 - E_3 + E_2)} \tag{4.15a}$$

$$(M - E_1 - E_3 + E_2)\psi^-(\mathbf{q}_3, \mathbf{k}_3) = \frac{1}{(2\pi)^3} \sum_{i \neq j \neq 2} \int d^3k_j' V_{2i}^{-+}(\pi; \mathbf{k}_j, \mathbf{k}_j')\psi^+(\mathbf{q}_j, \mathbf{k}_j') + 0(V^2) \tag{4.15b}$$

$$E_1 = (m^2 + (\mathbf{k}_3 - \tfrac{1}{2}\mathbf{q}_3)^2)^{1/2}; \quad E_2 = (m^3 + (\mathbf{k}_3 + \tfrac{1}{2}\mathbf{q}_3)^2)^{1/2}; \quad E_3 = (m^2 + \mathbf{q}_3^2)^{1/2} \tag{4.15c}$$

and nucleon 1 and 3 are on the mass shell, therefore

$$\hat{q}_3 = (\hat{q}_{30}, \mathbf{q}_3), \quad \hat{q}_{30} = -M/3 + E_3$$
$$\hat{k}_3 = (\hat{k}_{30}, k_3), \quad \hat{k}_{30} = -M/3 + \tfrac{1}{2}\hat{q}_{30} + E_1. \tag{4.16}$$

Analogous equations hold for $\psi^-(\mathbf{q}_1, \mathbf{k}_1)$ and $\psi^-(\mathbf{q}_2, \mathbf{k}_2)$.

For the OPE potential, we take the linear combination of pseudoscalar and pseudovector interactions given in equation (4.1)

$$\vartheta_{ij}(\pi) = g_\pi^2 \boldsymbol{\tau}_i \boldsymbol{\tau}_j \frac{C_i(k_l - k_l')C_j(k_l - k_l')}{m_\pi^2 - (k_l - k_l')^2} \tag{4.17}$$

$$C_i(k_l - k_l') = \lambda(\gamma_5)_i + (1 - \lambda)\frac{1}{2m}\gamma_i \cdot (k_l - k_l')(\gamma_5)_i. \tag{4.18}$$

If nucleon i is on shell, we have to replace $k_l - k_l'$ by $\hat{k}_l - \hat{k}_l'$, where

$$\hat{k}_l - \hat{k}_l' = (E_i - E_i', \mathbf{k}_l - \mathbf{k}_l').$$

Using (2.14) and (4.3), we find the following expression for the potential of equation (4.15) in the nonrelativistic limit

$$V_{ij}^{-+}(\pi; \mathbf{k}_l, \mathbf{k}_l') = g_\pi^2(\boldsymbol{\tau}_i\boldsymbol{\tau}_j)\frac{\lambda}{2m}\frac{\boldsymbol{\sigma}_i(\mathbf{k}_l - \mathbf{k}_l')}{m_\pi^2 + (\mathbf{k}_l - \mathbf{k}_l')^2}. \tag{4.19}$$

The elimination of the wave function component ψ^- from the matrix element of the current operator J_μ, equations (3.9) and (3.19), consequently induces another class of effective exchange currents, let us call these $\bar{\Lambda}_{\mu,ij}^{++}$, which are defined as currents of positive energy nucleons. The exchange currents $\Lambda_{\mu,ij}^{++}$ and $\bar{\Lambda}_{\mu,ij}^{++}$ together define the complete exchange current of a bound state of positive energy nucleons, described by the wave function ψ^+ or by φ, if the nonrelativistic limit is taken.

In calculating the correction to the GT matrix element due to the space component of the exchange current $\bar{\Lambda}_\mu^{++}$, we shall not use the full wave function, but retain only the symmetric S-state of φ. We have shown in Appendix 1 that this assumption leads to an especially simple expression for the matrix element of a two nucleon operator. Using (A1.2), the correction is given by

$$(M_A^{(0)})_m\delta = \frac{1}{(2\pi)^9}\int d^3q\, d^3k'\, d^3k''\varphi^*(\mathbf{q}, \mathbf{k}'')\sum_{i\neq j}\bar{\Lambda}_{m,ij}^{++}(\mathbf{k}'', \mathbf{k}', M)\varphi(\mathbf{q}, \mathbf{k}'). \tag{4.20}$$

From (4.6), (4.7b), (4.15) and (4.19), we find for the pair creation current

$$\begin{aligned}\bar{\Lambda}_{m,ij}^{++}(\text{p.c.}) = -i\lambda\frac{g_\pi^2}{4m^3}\Big\{&-i((\mathbf{k}'' - \mathbf{k}'') \times \boldsymbol{\sigma}_i)_m\boldsymbol{\sigma}_j(\mathbf{k}'' - \mathbf{k}')(\boldsymbol{\tau}_j \times \boldsymbol{\tau}_i)_+ \\ &+ ((\mathbf{p}_i' + \mathbf{p}_i'') \times \boldsymbol{\sigma}_i)_m\boldsymbol{\sigma}_j(\mathbf{k}'' - \mathbf{k}')(\tau_j)_+\Big\} \\ &\times \frac{1}{m_\pi^2 + (\mathbf{k}'' - \mathbf{k}')^2}\end{aligned} \tag{4.21}$$

where $\mathbf{p}_i' = -\frac{1}{2}\mathbf{q} - \mathbf{k}'$ and $\mathbf{p}_i'' = -\frac{1}{2}\mathbf{q} - \mathbf{k}''$. This current has been discussed already in Ref. [5].

Inserting (4.21) into (4.20) gives a correction

$$\delta(\text{p.c.}) = \frac{8}{3}\lambda\frac{m_\pi}{m}f_\pi^2\langle Y_0(x_\pi)\rangle \tag{4.22}$$

where

$$f_\pi^2 = \frac{g_\pi^2 m_\pi^2}{4\pi 4m^2} \tag{4.23}$$

$$Y_0(x) = \frac{e^{-x}}{x} \tag{4.24}$$

with $x_\pi = m_\pi x$, and the matrix element $\langle Y_0(x_\pi)\rangle$ has been defined in the Appendix (A1.12).

Similarly, the fourth term of (4.6) gives rise to another exchange current (decay of the antinucleon)

$$\bar{\Lambda}_{m,ij}^{++}(\bar{N}) = -\frac{\lambda^2}{(2\pi)^3}\frac{g_\pi^4}{(2m)^4}\int d^3k\,\frac{3(\mathbf{k} - \mathbf{k}')(\mathbf{k} - \mathbf{k}'')}{[m_\pi^2 + (\mathbf{k} - \mathbf{k}')^2][m_\pi^2 + (\mathbf{k} - \mathbf{k}'')^2]}(\sigma_i)_m(\tau_i)_+ \tag{4.25}$$

where we used

$$(\boldsymbol{\tau}_i\boldsymbol{\tau}_j)(\tau_i)_+(\boldsymbol{\tau}_i\boldsymbol{\tau}_j) = -3(\tau_i)_+ \tag{4.26}$$

with

$$\frac{1}{(2\pi)^3}\int d^3k\,\frac{e^{-i\mathbf{k}\mathbf{x}}}{m_\pi^2+\mathbf{k}^2} = \frac{m_\pi}{4\pi}\,Y_0(x_\pi) \tag{4.27}$$

$$\frac{1}{(2\pi)^3}\int d^3k\,\frac{\mathbf{k}}{m_\pi^2+\mathbf{k}^2}\,e^{-i\mathbf{k}\mathbf{x}} = i\hat{\mathbf{x}}\,\frac{m_\pi^2}{4\pi}\,Y_0'(x_\pi) \tag{4.28}$$

$$Y_0'(x) = -\left(1+\frac{1}{x}\right)Y_0(x) \tag{4.29}$$

and using the results of Appendix 1, we find from (4.20) and (4.25) a correction

$$\delta'(\bar{N}) = -6\lambda^2 f_\pi^4\langle(Y_0'(x_\pi)^2\rangle. \tag{4.30}$$

The corresponding normalization correction of the wave function, $\delta''(\bar{N})$, will be given in Section 5.

4.2. *One boson exchanged between nucleons*

The one boson exchange current $\Lambda_\mu^{(1)}$ has been represented in Figures 3b and c and has been discussed already in detail for the cases where there is one π, one ρ and one ω exchanged between the nucleons [5–10]. In a classification scheme according to the number of bosons exchanged between the nucleons, the one boson exchange current should give the dominant contribution and therefore the current $\Lambda_\mu^{(1)}$ has received almost exclusive attention in discussions of exchange current effects in nuclei. We shall present here for completeness sake the results of these papers.

For the calculation of the correction to the GT matrix element due to the space component of the exchange current $\Lambda_\mu^{(1)}$ equation (A1.1) must be used, to give

$$(M_A^{(0)})_m\delta = \frac{1}{(2\pi)^9}\sum_{i\neq j\neq l}\int d^3q_l d^3k_l' d^3k_l'' \times \varphi^*(\mathbf{q}_l, \mathbf{k}_l'')\Lambda_{m,ij}^{++}(\mathbf{k}_l'', \mathbf{k}_l', M)\varphi(\mathbf{q}_l, \mathbf{k}_l'). \tag{4.31}$$

The simplifications that led to equation (4.20) cannot be made here since the complete wave function φ equation (4.7b) is necessary to reasonably estimate the exchange correction δ. It is sufficient however to consider only the S- and D-state components of the nuclear wave function. The OPE current has been determined in Refs. [5, 6] using the low energy theorem and in Refs. [7, 8] by a phenomenological model which approximates the pion-production process by the pole diagrams of Figure 3c with nucleon isobars N^* treated as stable particles, in virtual states. The calculation of Ref. [8] is restricted to the three lowest-excited nucleon resonances $N^*(\frac{3}{2}^+, \frac{3}{2}) = \Delta$ (1236), $N^*(\frac{1}{2}^+, \frac{1}{2})$ and $N^*(\frac{3}{2}^-, \frac{1}{2})$, but only the Δ gives an appreciable contribution to the GT-matrix element. The exchange current due to virtual excitation of Δ (1236) has a nonvanishing matrix element only between S- and D-state components of the wave function. The numerical results of Ref. [8] have been collected in Table I. The low energy theorem of Adler and Dothan [17] can be used in conjunction with the vector dominance model to derive the vector meson exchange current in terms of pion

photoproduction amplitudes $V_l^{(\pm,0)}$. The pion exchange contribution to $V_l^{(\pm,0)}$ is represented in Figure 3b (with $B = \pi$ and $B' = \rho$) and has been discussed in Refs. [5–8].

Those parts of the pion photoproduction amplitudes coming from the exchange of the Δ (1236) (Fig. 3c with $B = \rho$), the ρ- and the ω-meson (Fig. 3b with $B = \rho$, $B' = \omega$) have been considered in Ref. [10] with the result

$$\delta_S(\rho;\Delta) = 0.24\%, \quad \delta_D(\rho;\Delta) = -2.79\%. \tag{4.32}$$

The numerical results of Table I are either taken from Ref. [8] or based upon the nuclear matrix elements calculated there in terms of the trinucleon wave function, which is the solution of the Faddeev equations for the Reid soft-core nucleon–nucleon potential. One of the essential points of the method of Ref. [8] is that the short range behavior of the nuclear wave function is correctly accounted for (at least according to our present knowledge) and matrix elements of transition operators that are singular for small distances can be evaluated reliably.

A more convenient model that uses the information contained in the wave function of the deuteron to describe the short range correlations of the trinucleon wave function has been proposed in Ref. [18]. The correlation function for the subsystem of two nucleons in the trinucleon is defined by

$$g(x) = \int d\Omega_x d^3y |\varphi(\mathbf{x}, \mathbf{y})|^2 \tag{4.33}$$

where $\varphi(\mathbf{x}, \mathbf{y})$ is the wave function of the 3-nucleon system (we consider only the symmetric S-state with $\varphi_S = \varphi(\mathbf{x}, \mathbf{y})$ and the configuration space variables are defined in (A1.5). The matrix element of e.g. a scalar two-body operator $0(x)$ between the S-state components of the 3-nucleon wave function is then given by

$$\langle 0(x)\rangle = \int dx x^2 g(x) 0(x) \tag{4.34}$$

with

$$\int dx x^2 g(x) = |\varphi_S|^2. \tag{4.35}$$

It has been emphasized in Ref. [18] that for small values of x the correlation function $g(x)$ very nearly coincides with the equivalent function for the deuteron

$$g_d(x) = \int d\Omega |\varphi_d(\mathbf{x})|^2. \tag{4.36}$$

This means that in the core region the influence of the third nucleon is small and $g(x)$, like $g_d(x)$, is generated by the short-range part of the nucleon–nucleon interaction alone.

For operators like the highly singular TBE currents, which we shall discuss in this work, the integrand of (4.34) contributes only for small values of the integration variable x, and following Ref. [18] we can put in this region

$$g(x) = g_d(x). \tag{4.37}$$

For the explicit calculation of matrix elements, we parameterize the deuteron wave function for the Reid hard core potential [19] such that

$$g_d(r) = \begin{cases} N[1 - e^{-\beta(r-r_c)}]^2 r^{-2} e^{-2\alpha r}, & r > r_c \\ 0, & r \leqslant r_c \end{cases} \tag{4.38}$$

with

$$\alpha = 0.2316\ \mathrm{fm}^{-1}$$
$$r_c = 0.548\ \mathrm{fm}$$
$$\beta = 2.202\ \mathrm{fm}^{-1}. \tag{4.39}$$

The factor N is determined by the normalization condition (4.35). With

$$x_\alpha = m_\alpha x \tag{4.40}$$

$$|\varphi_S|^2 = 0.897 \tag{4.41}$$

and using the approximation (4.37), we find for the matrix elements which are needed in later calculations, the following values:

$$\langle Y_2^2(x_\pi)\rangle = 10.468 \quad \langle (Y_0'(x_\pi))^2\rangle = 0.4090$$
$$\langle Y_0^2(x_\pi)\rangle = 0.0707 \quad \langle x_\pi Y_0^2(x_\pi)\rangle = 0.0571. \tag{4.42}$$

4.3. *Two bosons exchanged between the nucleons*

We shall take matrix elements of the two boson exchange current $\Lambda_\mu^{(2)}$ between the S-state component φ_S of the nuclear wave function only and neglect those between S- and D-state components, since the latter effectively correspond to processes where three bosons are exchanged between the nucleons (compare the discussion of the D-state wave function in Ref. [7]). The resulting change of the GT matrix element then can be calculated according to equation (4.20) with $\bar{\Lambda}_{m,ij}^{++}$ replaced by $\Lambda_{m,ij}^{++}$.

4.3.1. *The two pion exchange current*

The Feynman diagrams which are associated with the TPE current are the box diagrams of Figure 4a and b and the crossed box diagram of Figure 4c. We shall examine the box diagrams in some detail in order to demonstrate the procedure we shall follow in the calculation of TBE effects. The $NN\pi$ vertex $ig_\pi C_i(q)(\tau_i)_n$ which we shall use has been given in equation (4.1) and the operator $C_i(q)$ is defined in (4.17). The current associated with the general box diagram Figure 9 is given by the usual Feynman rules [15]

$$\Lambda_{\mu,12}^{++}(4\mathrm{a}) = \bar{u}_1(-\tfrac{1}{2}\mathbf{p} + \mathbf{k}')\bar{u}_2(-\tfrac{1}{2}\mathbf{p} - \mathbf{k}')\Lambda_{\mu,12}(4\mathrm{a}) \times u_1(-\tfrac{1}{2}\mathbf{p} + \mathbf{k}'')u_2(-\tfrac{1}{2}\mathbf{p} - \mathbf{k}'') \tag{4.44a}$$

$$\begin{aligned}\Lambda_{\mu,12}(4\mathrm{a}) = {} & \frac{i}{(2\pi)^4} g_\pi^4 \int d^4k(\boldsymbol{\tau}_1\boldsymbol{\tau}_2)(\tau_2)_+(\boldsymbol{\tau}_1\boldsymbol{\tau}_2) \\ & \frac{C_1(k' - k)[\gamma\cdot(P/3 - p/2 + k) + m]^{(1)}}{[(k' - k)^2 - m_\pi^2 + i\epsilon][(k'' - k)^2 - m_\pi^2 + i\epsilon]} \\ & \times \frac{C_1(k - k'')C_2(k - k')[\gamma\cdot(P/3 - p/2 - k) + m]^{(2)}}{[(P/3 - p/2 + k)^2 - m^2 + i\epsilon][(P/3 - p/2 - k)^2 - m^2 + i\epsilon]^2} \\ & \times \gamma_\mu\gamma_5[\gamma\cdot(P/3 - p/2 - k) + m]^{(2)}C_2(k'' - k).\end{aligned} \tag{4.44b}$$

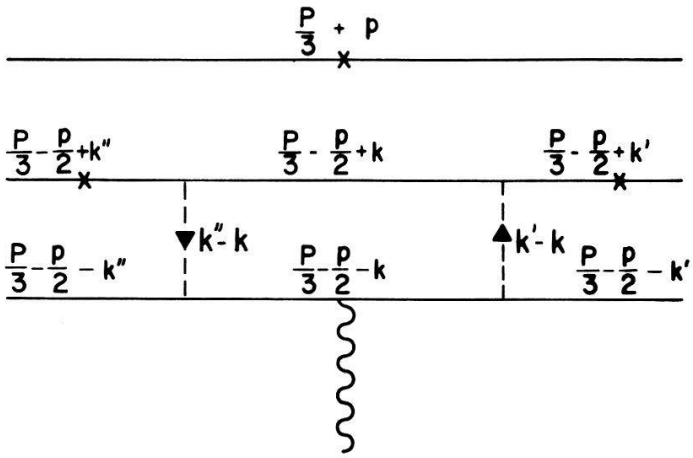

Figure 9
The exchange current associated with the box diagram. The spectator particle has four momentum $P/3 + p$ and is on the mass shell.

From the crossed box diagram of Figure 4c, we derive the analogous expression

$$\Lambda^{++}_{\mu,12}(4c) = \bar{u}_1(-\tfrac{1}{2}\mathbf{p} + \mathbf{k}')\bar{u}_2(-\tfrac{1}{2}\mathbf{p} - \mathbf{k}')\Lambda_{\mu,12}(4c) \times u_1(-\tfrac{1}{2}\mathbf{p} + \mathbf{k}'')u_2(-\tfrac{1}{2}\mathbf{p} - \mathbf{k}'') \tag{4.44c}$$

$$\Lambda_{\mu,12}(4c) = \frac{i}{(2\pi)^4} g_\pi^4 \int d^4k(\tau_1)_n(\boldsymbol{\tau}_1\boldsymbol{\tau}_2)(\tau_2)_+(\tau_2)_n \frac{C_1(k-k'')[\gamma\cdot(P/3 - p/2 + k' + k'' - k) + m]^{(1)}}{[(k'-k)^2 - m_\pi^2 + i\epsilon][(k''-k)^2 - m_\pi^2 + i\epsilon]} \times \frac{C_1(k'-k)C_2(k-k')[\gamma\cdot(P/3 - p/2 - k) + m]^{(2)}}{[(P/3 - p/2 + k' + k'' - k)^2 - m^2 + i\epsilon][(P/3 - p/2 - k)^2 - m^2 + i\epsilon]^2} \times \gamma_\mu\gamma_5[\gamma\cdot(P/3 - p/2 - k) + m]^{(2)}C_2(k''-k) \tag{4.44d}$$

where $P = (M, 0, 0, 0)$.

In (4.44a, c) we have omitted normalization factors m/E since we shall take the nonrelativistic limit in the end. The external particle 1 is on the mass shell, the same is assumed for the spectator particle 3 with four momentum $P/3 + p$. This condition gives

$$\frac{M}{3} + p_0 = E_p, \quad \frac{M}{3} - \frac{p_0}{2} + k_0'' = E_{-p/2+k''}, \quad \frac{M}{3} - \frac{p_0}{2} + k_0' = E_{-p/2+k'}$$

and in the nonrelativistic limit, we can put

$$p_0 = k_0' = k_0'' = 0, \quad M/3 = m. \tag{4.45}$$

We perform now the k_0-integration, using the residue theorem and close the contour in the lower k_0 plane. We shall split the result in the following manner

$$\Lambda_{\mu,12}(4a) = \Lambda_{\mu,12}(4a; N_1) + \Lambda_{\mu,12}(4a; \pi) + \Lambda_{\mu,12}(4a; N_2) \tag{4.46a}$$

which are the residues from the pole of nucleon 1, the double pole of nucleon 2 and the pion poles,

$$\Lambda_{\mu,12}(4c) = \Lambda_{\mu,12}(4c;\pi) + \Lambda_{\mu,12}(4c;N) \tag{4.46b}$$

here we have a sum of the residues from the pion poles and in the nonrelativistic limit the nucleon propagators give rise to a triple pole.

The current $\Lambda_{\mu,12}(4a;N_1)$ corresponds to the diagram of Figure 4b, which is defined as the residue from the N_1-pole, and consequently does not contribute to the exchange current $\Lambda_\mu^{(2)}$. For the explicit evaluation of the currents $\Lambda_{\mu,12}(4a;\pi)$ and $\Lambda_{\mu,12}(4c;\pi)$, it is profitable to divide the Feynman propagator of the nucleon into a particle and an antiparticle propagator according to the identity (see equation (2.11))

$$\frac{\gamma\cdot q + m}{q^2 - m^2} = \frac{m}{E_q}\frac{u(\mathbf{q})\bar{u}(\mathbf{q})}{q_0 - E_q} + \frac{m}{E_q}\frac{v(-\mathbf{q})\bar{v}(-\mathbf{q})}{q_0 + E_q}. \tag{4.47}$$

We shall need the space part of the current in the nonrelativistic limit, which can be determined using equations (4.2), (4.3) and (4.7). Since

$$(\boldsymbol{\tau}_1\boldsymbol{\tau}_2)(\tau_2)_+(\boldsymbol{\tau}_1\boldsymbol{\tau}_2) = (2\tau_1 - \tau_2)_+$$

only linear combinations of the spin matrices $\boldsymbol{\sigma}_1$, $\boldsymbol{\sigma}_2$ survive in the final matrix element. Therefore we have

$$\begin{aligned}
\Lambda_{m,12}^{++}(4a;\pi) = \frac{g_\pi^4}{(2\pi)^3}(2\tau_1 - \tau_2)_+ \int d^3k \\
\times \Bigg\{ \frac{1}{(2m)^4}[(\mathbf{k}' - \mathbf{k})(\mathbf{k}'' - \mathbf{k})(k' - k)_m\boldsymbol{\sigma}_2(\mathbf{k}'' - \mathbf{k}) \\
- ((\mathbf{k}' - \mathbf{k})(\mathbf{k}'' - \mathbf{k}))^2(\sigma_2)_m \\
+ (\mathbf{k}' - \mathbf{k})(\mathbf{k}'' - \mathbf{k})(k'' - k)_m\boldsymbol{\sigma}_2(\mathbf{k}' - \mathbf{k}) \\
+ ((\mathbf{k}' - \mathbf{k}) \times (\mathbf{k}'' - \mathbf{k}))\boldsymbol{\sigma}_1((\mathbf{k}' - \mathbf{k}) \times (\mathbf{k}'' - \mathbf{k}))_m] \\
\times \frac{1}{\omega''^2 - \omega'^2}\left(\frac{1}{2\omega''^4} - \frac{1}{2\omega'^4}\right) \\
+ \frac{\lambda^2}{(2m)^2}(\mathbf{k}' - \mathbf{k})(\mathbf{k}'' - \mathbf{k})(\sigma_2)_m \frac{1}{(2m)^2}\frac{1}{\omega''^2 - \omega'^2}\left(\frac{1}{2\omega''^2} - \frac{1}{2\omega'^2}\right) \\
+ \frac{\lambda^2}{(2m)^2}[(k' - k)_m\boldsymbol{\sigma}_2(\mathbf{k}'' - \mathbf{k}) - (\mathbf{k}' - \mathbf{k})(\mathbf{k}'' - \mathbf{k})(\sigma_2)_m \\
+ (k'' - k)_m\boldsymbol{\sigma}_2(\mathbf{k}' - \mathbf{k})]\frac{1}{2m}\frac{1}{\omega''^2 - \omega'^2}\left(\frac{1}{2\omega''^3} - \frac{1}{2\omega'^3}\right) \\
+ \lambda^4(\sigma_2)_m \frac{1}{(2m)^3}\frac{1}{\omega''^2 - \omega'^2}\left(\frac{1}{2\omega''} - \frac{1}{2\omega'}\right)\Bigg\}
\end{aligned} \tag{4.48a}$$

and with

$$(\tau_1)_n(\boldsymbol{\tau}_1\boldsymbol{\tau}_2)(\tau_2)_+(\tau_2)_n = -(2\tau_1 + \tau_2)_+$$

we have

$$\Lambda^{++}_{m,12}(4c;\pi) = \frac{g_\pi^4}{(2\pi)^3}(2\tau_1 + \tau_2)_+ \int d^3k$$
$$\times \left\{ \frac{1}{(2m)^4}[(\mathbf{k}' - \mathbf{k})(\mathbf{k}'' - \mathbf{k})(k' - k)_m \boldsymbol{\sigma}_2(\mathbf{k}'' - \mathbf{k})\right.$$
$$- ((\mathbf{k}' - \mathbf{k})(\mathbf{k}'' - \mathbf{k}))^2(\sigma_2)_m$$
$$+ (\mathbf{k}' - \mathbf{k})(\mathbf{k}'' - \mathbf{k})(k'' - k)_m \boldsymbol{\sigma}_2(\mathbf{k}' - \mathbf{k})$$
$$- ((\mathbf{k}' - \mathbf{k}) \times (\mathbf{k}'' - \mathbf{k}))\boldsymbol{\sigma}_1((\mathbf{k}' - \mathbf{k}) \times (\mathbf{k}'' - \mathbf{k}))_m]$$
$$\times \frac{1}{\omega''^2 - \omega'^2}\left(\frac{1}{2\omega''^4} - \frac{1}{2\omega'^4}\right)$$
$$+ \frac{\lambda^2}{(2m)^2}(\mathbf{k}' - \mathbf{k})(\mathbf{k}'' - \mathbf{k})(\sigma_2)_m \frac{1}{(2m)^2}\frac{1}{\omega''^2 - \omega'^2}\left(\frac{1}{2\omega''^2} - \frac{1}{2\omega'^2}\right)$$
$$- \frac{\lambda^2}{(2m)^2}[(k' - k)_m \boldsymbol{\sigma}_2(\mathbf{k}'' - \mathbf{k}) - (\mathbf{k}' - \mathbf{k})(\mathbf{k}'' - \mathbf{k})(\sigma_2)_m$$
$$+ (k'' - k)_m \boldsymbol{\sigma}_2(\mathbf{k}' - \mathbf{k})]\frac{1}{2m}\frac{1}{\omega''^2 - \omega'^2}\left(\frac{1}{2\omega''^3} - \frac{1}{2\omega'^3}\right)$$
$$\left. - \lambda^4(\sigma_2)_m \frac{1}{(2m)^3}\frac{1}{\omega''^2 - \omega'^2}\left(\frac{1}{2\omega''} - \frac{1}{2\omega'}\right)\right\} \tag{4.48b}$$

where

$$\omega' = (m_\pi^2 + (\mathbf{k}' - \mathbf{k})^2)^{1/2}, \quad \omega'' = (m_\pi^2 + (\mathbf{k}'' - \mathbf{k})^2)^{1/2}$$

and we have approximated the antiparticle propagators by

$$\frac{1}{2m \pm \omega'} \cong \frac{1}{2m}.$$

Furthermore, we have neglected small terms corresponding to the creation of a particle–antiparticle pair by the axial current (terms of order λ and λ^3).

A crucial approximation of the approach presented here is that we calculate the TPE current in the nonrelativistic limit, i.e. for absolute values of the three-momenta $\mathbf{p}$, $\mathbf{k}'$, $\mathbf{k}''$ and $\mathbf{k}$ much smaller than the nucleon mass m. This procedure is certainly legitimate for the external momenta $\mathbf{p}$, $\mathbf{k}'$, $\mathbf{k}''$ which are suppressed by the wave function (when the matrix element of the TPE current is formed) due to its behavior at small distances. The same mechanism however acts also to restrict the intermediate momentum $\mathbf{k}$ to low values. This can be seen in the following way: Since the integrand of the TPE current essentially depends upon the momenta through the combinations $\mathbf{k}' - \mathbf{k}$ and $\mathbf{k}'' - \mathbf{k}$, the corresponding matrix element which has the general form as given in equation (A1.2) can be reexpressed in configuration space by equation (A1.6). This matrix element receives contributions only from the region outside the nuclear core, where the TPE current is predominantly determined by small values of $\mathbf{k}' - \mathbf{k}$ and $\mathbf{k}'' - \mathbf{k}$.

The same argument can be used to remove possible divergent parts of the TPE current, which generate δ-function like singularities in configuration space. However,

LABORATOIRE DE PHYSIQUE UNIVERSITE NEUCHATEL

the matrix element of the δ-function vanishes since the repulsive nuclear core prevents the two interacting nucleons to overlap.

With these arguments in mind, we shall consider primarily that finite part of the TPE current which is determined by low external and intermediate momenta. We note here that we shall explicitly account for the k-dependence in Section 5.2.2, when the effect of the Δ (1236) in intermediate states is discussed.

The integrands of equation (4.48) which are of order λ^2 and λ^4 can be replaced by expressions which are more suitable for an analytic treatment, by means of the following integral representation

$$\frac{1}{\omega} = \frac{2}{\pi}\int_0^\infty dz \frac{1}{\omega^2 + z^2}. \tag{4.49}$$

We shall show in Appendix 3 that the identity (4.49) is sufficient to make the currents $\Lambda^{++}_{m,12}(4a;\pi)$ and $\Lambda^{++}_{m,12}(4c;\pi)$ completely separable, i.e. these are products of two functions of only one of the momentum variables $\mathbf{k}' - \mathbf{k}$ and $\mathbf{k}'' - \mathbf{k}$. Therefore, the methods of Appendix 1 can be applied to derive from equation (4.20) the following correction of the GT matrix element

$$\begin{aligned}\delta'(4a, b, c) = f_\pi^4 \Big\{ & -\tfrac{4}{3}\langle (Y_0'(x_\pi))^2\rangle + \tfrac{4}{3}\langle (1 - x_\pi) Y_0^2(x_\pi)\rangle \\ & + 4\lambda^2 \langle (Y_0'(x_\pi))^2\rangle \\ & - \lambda^2 \frac{16}{3\pi}\frac{m}{m_\pi}\left\langle \frac{1}{x_\pi^2} K_1(2x_\pi) - \frac{1}{x_\pi} K_1'(2x_\pi)\right\rangle \\ & + \lambda^4 \frac{8}{\pi}\frac{m}{m_\pi}\left\langle \frac{1}{x_\pi^2} K_1(2x_\pi)\right\rangle \Big\}\end{aligned} \tag{4.50}$$

where the Bessel function is given by the following Fourier transform

$$\frac{1}{(2\pi)^3}\int d^3k \frac{e^{-i\mathbf{k}\mathbf{x}}}{\omega} = \frac{m_\pi^2}{4\pi}\frac{2}{\pi}\frac{1}{x_\pi} K_1(x_\pi). \tag{4.51}$$

We turn now to a short discussion of the third current $\Lambda_{\mu,12}(4a; N_2)$ of the sum in (4.46a) which is the contribution of the negative-energy pole, i.e. nucleon 2 is on the mass shell and has negative energy. The virtual nucleon 1 and the two pions in turn are very far from their respective mass shell (which makes their propagators small) and it needs very high values of the momentum variables to make this current have any importance at all. However, the high momentum part of a transition operator is damped by short distance effects, and these effects completely suppress the current $\Lambda_{\mu,12}(4a; N_2)$. For the same reasons, we can neglect the current $\Lambda_{\mu,12}(4c; N)$ of equation (4.46b), which is again the contribution of the negative-energy pole.

The box diagrams which have been discussed above give corresponding contributions also to the normalization condition (2.15). These we shall treat in Section 5.2.1.

4.3.2. The two pion exchange current with a virtual Δ

We have considered the TPE current in the lowest order only, and since we are dealing with strongly interacting particles higher-order Feynman graphs (with only

two pions exchanged between nucleons, but additional pions emitted and absorbed by the same nucleon line) may be just as important. Following the discussion of this point in Section 3, we shall account for the effect of meson radiative corrections by diagrams with virtual nucleon isobars, and we expect those diagrams with only one Δ (1236), graphically represented in Figure 4d–m, to give the leading contribution. In accordance with the work of Refs. [5, 8], we shall use the following vertex for the process $\Delta^\alpha(p_1) + \pi^n(q) \to N^\sigma(p_2)$

$$\frac{f_{\pi N\Delta}}{m_\pi} q_\mu \langle 1\tfrac{1}{2} n\sigma | \tfrac{3}{2}\alpha \rangle \tag{4.52a}$$

where $q = p_2 - p_1$, μ is the vector index of the Δ and the Clebsch–Gordan coefficient takes care of the isospin dependence, and the following expression for the spin $-\frac{3}{2}$ propagator

$$(g_{\mu\nu} - \tfrac{1}{3}\gamma_\mu\gamma_\nu) \frac{1}{\gamma \cdot p_1 - m_\Delta} \tag{4.52b}$$

where p_1 is the four momentum of the Δ. In writing down the propagator (4.43b), we have dropped terms of order p_1/m_Δ, since the corresponding error in the resulting exchange current is effectively of the same order as the relativistic corrections, which, as we have seen, can be safely neglected. In Figure 10, we have drawn the two basic

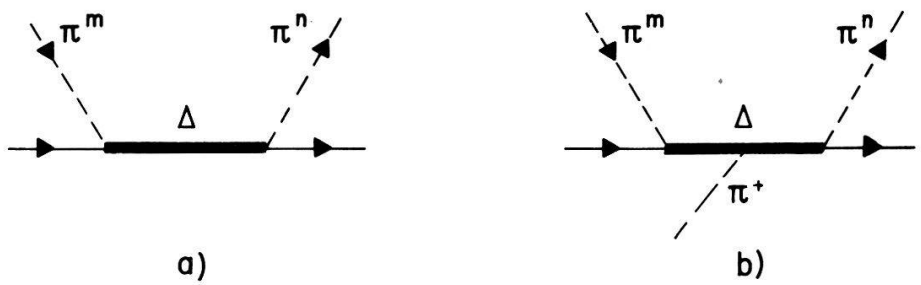

Figure 10
Pion–nucleon scattering graphs with the nucleon isobar Δ (1236) in the intermediate state.

pion–nucleon scattering diagrams which are necessary to determine the Feynman diagrams of Figure 4d–m, and we shall use PCAC afterwards to replace the pion line by the axial current. The general isospin structure of the amplitude for the process of Figure 10a is given by

$$M(10\text{a}) = M(\pi^m(q) + N(p_1) \to \pi^n(k) + N(p_2))$$
$$M(10\text{a}) = \bar{u}(\mathbf{p}_2)(A\delta_{nm} + B[\tau_n, \tau_m])u(\mathbf{p}_1).$$

Introducing the appropriate Clebsch–Gordon coefficients at each vertex, we find

$$M(10\text{a}) = \bar{u}(\mathbf{p}_2)(\tfrac{2}{3}\delta_{nm} - \tfrac{1}{6}[\tau_n, \tau_m])R(\tfrac{3}{2}, \tfrac{3}{2})u(\mathbf{p}_1) \tag{4.53a}$$

and the scattering process $\pi^+ p \to \pi^+ p$ gives

$$R(\tfrac{3}{2}, \tfrac{3}{2}) = \frac{f^2_{\pi N\Delta}}{m_\pi^2} \frac{1}{m_\Delta - (k_0 + p_{20})} (\tfrac{2}{3}qk - \tfrac{1}{3}i\sigma_{\mu\nu}k_\mu q_\nu) \tag{4.53b}$$

where we have regarded the positive energy Δ-contribution only. The amplitude corresponding to the process of Figure 10b can be derived in the same way

$$M(10\text{b}) = M(\pi^m + \pi^+ + N(p_1) \to \pi^n + N(p_2))$$
$$M(10\text{b}) = \bar{u}(\mathbf{p}_2)(\tau_m\tau_n\tau_+ - \tfrac{1}{2}\tau_m\tau_+\tau_n + \tau_+\tau_m\tau_n - \tfrac{1}{2}\tau_+\delta_{nm})R_b u(\mathbf{p}_1). \tag{4.54}$$

We shall not need the knowledge of the isoscalar function R_b.

An immediate consequence of equations (4.53) and (4.54) is that the exchange currents corresponding to the Feynman diagrams of Figure 4d and e give no contribution to the GT matrix element, since these currents have the form $(\tau_1 + \tau_2)_+$ in isospin space and the matrix element of this operator vanishes between space symmetric S-states (see also Appendix 1 where we have listed all possible matrix elements). The crossed graphs of Figure 4f and g lead to a small correction of the GT matrix element of about 0.1% and we omit the discussion of these graphs.

In order to evaluate the remaining diagrams of Figure 4, we replace one pion of the scattering process of Figure 10a by the axial current A_μ^+. Since only the space components of the axial current are needed, we obtain from equation (4.53) and using the hypothesis of PCAC the following expression for the amplitude in the nonrelative limit

$$M'(10\text{a}) = M'(N(p_1) + A_m^+(0) \to N(p_2) + \pi^n(k))$$
$$M'(10\text{a}) = -i2m\frac{g_A}{g_\pi}\frac{f_{\pi N\Delta}^2}{m_\pi^2}\frac{1}{m_\Delta - m - k_0}$$
$$\times (\tfrac{1}{2}\tau_+\tau_n + \tfrac{1}{6}\tau_n\tau_+)(\tfrac{2}{3}k_m + \tfrac{1}{3}i\epsilon_{mij}k_i\sigma_j). \tag{4.55}$$

In calculating the exchange currents associated with the diagrams of Figure 4k–m, we proceed in the manner that has been demonstrated in the last section. The box diagram will be approximated by the residues from the pole of nucleon 1 and the pion poles, the crossed diagrams by the pion pole contributions. According to our classification scheme of exchange currents, the currents corresponding to the residues from the N_1-pole, Figure 4i and m, are one boson exchange currents $\Lambda_\mu^{(1)}$ and are already contained in the graphs of Figure 3c with $N^* = \Delta$, $B = \pi$. We have noted that this particular OBE current has vanishing matrix elements between fully space symmetric states because of spin–isospin selection rules, and we have taken the matrix element between S- and D-state. The D-state component of the wave function was approximated in Refs. [7, 8] where the assumption has been made that the main part of the tensor force comes from one pion exchange. It is therefore not unexpected that the matrix element of the exchange current of the type shown in Figure 4i, taken between S-states, leads to the same correction $\delta_D(\pi;\Delta)$ of Ref. [7] if only the propagator of nucleon 2 $(M - 2E_k - E_p)^{-1}$ is replaced by the effective denominator $-1/\Delta E$. The matrix elements of the exchange currents of Figure 4k, l and m, taken between S-states, vanish again, because of the above mentioned selection rules.

There remains to calculate the sum of the exchange currents of Figure 4h, i and j $\Lambda_{\mu,12}^{(2)}$(4h, i, j). Using (4.55), the box diagram Figure 4h has the following form in isospin space

$$\tfrac{1}{2}(\tau_2)_+(\boldsymbol{\tau}_1\boldsymbol{\tau}_2)^2 + \tfrac{1}{6}(\boldsymbol{\tau}_1\boldsymbol{\tau}_2)(\tau_2)_+(\boldsymbol{\tau}_1\boldsymbol{\tau}_2) = -\tfrac{2}{3}(\tau_1)_+ + \tfrac{4}{3}(\tau_2)_+ - i(\boldsymbol{\tau}_1 \times \boldsymbol{\tau}_2)_+$$

and for the crossed box diagram Figure 4j, we find

$$\tfrac{1}{2}(\tau_2)_+(\tau_2)_n(\boldsymbol{\tau}_1\boldsymbol{\tau}_2)(\tau_1)_n + \tfrac{1}{6}(\tau_2)_n(\tau_2)_+(\boldsymbol{\tau}_1\boldsymbol{\tau}_2)(\tau_1)_n = \tfrac{2}{3}(\tau_1)_+ + \tfrac{4}{3}(\tau_2)_+ + i(\boldsymbol{\tau}_1 \times \boldsymbol{\tau}_2)_+.$$

This gives the following expression for the exchange current

$$
\begin{aligned}
&\Lambda^{(2)}_{m,12}(4\mathrm{h}, \mathrm{i}, \mathrm{j}) \\
&= 2\frac{g_\pi^2}{(2\pi)^3}\frac{f_{\pi N\Delta}^2}{m_\pi^2}\int d^3k\Big\{[(-\tfrac{2}{3}\tau_1 + \tfrac{4}{3}\tau_2 - i\boldsymbol{\tau}_1 \times \boldsymbol{\tau}_2)_+ \\
&\quad \times \tfrac{8}{9}((\mathbf{k}' - \mathbf{k})(\mathbf{k}'' - \mathbf{k}))^2(\sigma_2)_m + \tfrac{8}{3}(\tau_2)_+((\mathbf{k}' - \mathbf{k})(\mathbf{k}'' - \mathbf{k}))^2 \\
&\quad \times (-\tfrac{4}{9}\sigma_2 + \tfrac{1}{9}\sigma_1 + \tfrac{1}{6}i\boldsymbol{\sigma}_1 \times \boldsymbol{\sigma}_2)_m \\
&\quad + \tfrac{8}{3}(\tau_2)_+(\mathbf{k}' - \mathbf{k})^2(\mathbf{k}'' - \mathbf{k})^2(-\tfrac{1}{9}\sigma_1 - \tfrac{1}{6}i\boldsymbol{\sigma}_1 \times \boldsymbol{\sigma}_2)_m] \\
&\quad \times \frac{1}{(2m)^2}\frac{1}{\omega''^2 - \omega'^2}\left(\frac{1}{2\omega''^3(m_\Delta - m + \omega'')} - \frac{1}{2\omega'^3(m_\Delta - m + \omega')}\right) \\
&\quad + \lambda^2\tfrac{8}{3}(\tau_2)_+\tfrac{4}{9}((\mathbf{k}' - \mathbf{k})(\mathbf{k}'' - \mathbf{k}))(\sigma_2)_m\frac{1}{2m} \\
&\quad \times \frac{1}{\omega''^2 - \omega'^2}\left(\frac{1}{2\omega''^2(m_\Delta - m + \omega'')} - \frac{1}{2\omega'^2(m_\Delta - m + \omega')}\right)\Big\} \\
&\quad + \text{tensors of rank } r \geqslant 1. \qquad (4.56)
\end{aligned}
$$

Following the discussion in Appendix 1, we have represented $\Lambda_{m,12}$ as a sum of irreducible tensor operators in momentum space and have written down the scalar part only. We have merely considered the case where nucleon 2 and Δ are in positive energy states, since this gives the dominant contribution. The factor 2 in front of equation (4.56) accounts for the fact that there are two possible decay processes $N + A_\mu^+ \to \Delta$ (represented in Figure 4h, i and j) and $\Delta + A_\mu^+ \to N$.

Introducing the exchange current $\Lambda^{(2)}_{m,12}(4\mathrm{h}, \mathrm{i}, \mathrm{j})$ into equation (4.20) and using the rules of Appendix 1 gives a correction of the GT matrix element

$$
\delta(4\mathrm{h}, \mathrm{i}, \mathrm{j}) = \frac{f_{\pi N\Delta}^2}{4\pi}f_\pi^2\frac{32}{27}\left\{\langle A^{(2)}_{31}\rangle + \langle B_{31}\rangle + \lambda^2 8\frac{m}{m_\pi}\langle A^{(1)}_{21}\rangle\right\}. \qquad (4.57)
$$

The matrix elements which appear in equation (4.57) are defined by

$$
\begin{aligned}
\langle A^{(r)}_{nm}\rangle &= \frac{(4\pi)^2}{(2\pi)^{12}}\int d^3p\, d^3k\, d^3k'\, d^3k''\varphi^*(\mathbf{p}, \mathbf{k}')\varphi(\mathbf{p}, \mathbf{k}'')m_\pi^{n+m-4-2r} \\
&\quad \times \frac{1}{\omega''^2 - \omega'^2}\left(\frac{1}{2\omega''^n(m_\Delta - m + \omega'')^m} - \frac{1}{2\omega'^n(m_\Delta - m + \omega')^m}\right) \\
&\quad \times [(\mathbf{k}' - \mathbf{k})(\mathbf{k}'' - \mathbf{k})]^r \qquad (4.58\mathrm{a})
\end{aligned}
$$

$$
\begin{aligned}
\langle B_{nm}\rangle &= \frac{(4\pi)^2}{(2\pi)^{12}}\int d^3p\, d^3k\, d^3k'\, d^3k''\varphi^*(\mathbf{p}, \mathbf{k}')\varphi(\mathbf{p}, \mathbf{k}'')m_\pi^{n+m-8} \\
&\quad \times \frac{1}{\omega''^2 - \omega'^2}\left(\frac{1}{2\omega''^n(m_\Delta - m + \omega'')^m} - \frac{1}{2\omega'^n(m_\Delta - m + \omega')^m}\right) \\
&\quad \times (\mathbf{k}' - \mathbf{k})^2(\mathbf{k}'' - \mathbf{k})^2. \qquad (4.58\mathrm{b})
\end{aligned}
$$

We shall discuss these matrix elements in Appendix 3.

4.3.3. The current due to the exchange of one pion and one vector meson

One of the crucial assumptions in the field theory of the nucleon–nucleon potential and the meson exchange currents is that the expansion into terms which correspond to

the number of bosons exchanged between the nucleons is reasonably convergent as the number of exchanged bosons increases. Since the TPE currents, which we have discussed thus far, give an appreciable correction of the GT matrix element, one might be interested to have at least some information about the magnitude of the matrix element of the current due to the exchange of three pions. We shall not present here any calculation of the uncorrelated three pion exchange, but consider briefly the correlated multipion exchange current, which we approximate as usual by the exchange of vector mesons. Vector meson exchange currents are given again by the graphs of Figure 4, which are meant now to represent the exchange of one pion and one vector meson.

We have calculated the current associated with the diagrams of Figure 4a, b, and c, but considered only the ω- and ρ-exchanges and found a correction of about

$$\delta'_{\rho,\omega}(4a, b, c) \simeq -0.05 \cdot 10^{-2}$$

where the value $\lambda = 1$ has been used.

From the currents of the graphs of Figure 4h–m, we expect a correction of about the same magnitude. But these effects can certainly be neglected at the present level of precision of theoretical predictions.

5. Renormalization of the Nuclear Wave Function due to the Exchange of Mesons

The ground state wave function φ of ^{3}He and ^{3}H is a superposition of S-state, S'-state and D-state components and this wave function, equation (4.9b), has been normalized to unity, i.e.

$$|\varphi_S|^2 + |\varphi_{S'}|^2 + |\varphi_D|^2 = 1. \tag{5.1}$$

Mesonic effects however change the normalization of the wave function, and the condition (2.15) holds instead of (5.1). The correctly normalized nuclear wave function is therefore given by

$$\varphi_{\text{norm}} = \frac{1}{Z^{1/2}} \varphi \tag{5.2}$$

where Z is defined by equation (2.15) and $|\varphi|^2 = 1$. The normalization factor Z can be discussed in complete analogy to our treatment of the matrix elements of exchange currents, and even the same diagrams can be used. This can be seen more clearly if the matrix element of a conserved current is considered. We take the electromagnetic current which is the sum of an isoscalar and the third component of an isovector

$$j_\mu^{\text{e.m.}}(x) = j_\mu^{(0)}(x) + j_\mu^{(3)}(x).$$

The two components are separately conserved currents. This requirement determines the isoscalar charge, in which we are particularly interested, of a three-nucleon bound state of mass M to be

$$\langle P | j_0^{(0)}(0) | P \rangle = \frac{3}{2} \frac{1}{2M} \tag{5.3a}$$

with $P^2 = M^2$. This condition (5.3a) is equivalent to the normalization condition (2.15) for the wave function. Accordingly, we define

$$Z = \tfrac{2}{3} \langle P | j_0^{(0)}(0) | P \rangle 2M \tag{5.3b}$$

and choose $P = (M, 0, 0, 0)$. The interpretation of (5.3a) is such that the renormalization of the isoscalar charge is cancelled exactly by the normalization correction of the wave function. The equation (5.3b) for the factor Z enables us to use the methods of Section 3 and again allows a convenient representation in terms of Feynman-like diagrams, where only the processes $N + j_0^{(0)} \to N$ and $N^* + j_0^{(0)} \to N^*$ are possible. We shall classify the various contributions once more according to the number of bosons exchanged between two nucleons, hence we write in analogy with equation (3.12)

$$Z = Z^{(0)} + Z^{(2)} + \cdots. \tag{5.4}$$

The matrix element of the current represented in Figure 3a, where there is no interaction between the two nucleons, corresponds to $Z^{(0)}$, while the matrix element of currents of the type shown in Figure 4a–g gives the TBE contribution $Z^{(2)}$.

5.1. *No boson exchanged between nucleons*

The normalization factor in this order is graphically represented in Figure 8 and is given by

$$Z^{(0)} = |\psi^+|^2 + |\psi^-|^2 \tag{5.5}$$

where $|\psi^+|^2$ and $|\psi^-|^2$ are defined as in equation (4.13b). The relativistic wave function ψ^+ can by means of equation (4.10) be expressed by the nonrelativistic wave function φ with $|\varphi|^2 = 1$. Bearing in mind that the correction of the GT matrix element due to $\Delta\varphi$ is small (as calculated in Appendix 2) and that the kinematic corrections cancel (see the discussion following equation (4.12)), we can replace $|\psi^+|^2$ by $|\varphi|^2$:

$$Z^{(0)} = 1 + |\psi^-|^2. \tag{5.6}$$

In the OPE approximation ψ^- is given by equations (4.15) and (4.19), and in a similar manner as in Section 4.1.2. we find

$$-\delta''(\bar{N}) = |\psi^-|^2 = 10\lambda^2 f_\pi^4 \langle (Y_0'(x_\pi))^2 \rangle. \tag{5.7}$$

5.2. *Two bosons exchanged between nucleons*

We shall calculate now the factor $Z^{(2)}$ of equation (5.4) using the definition (5.3b), which means that we must determine the exchange current $\Lambda_{0,ij}$ induced by the isoscalar current $j_0^{(0)}$. There are no one boson exchange currents for this particular interaction, and the matrix element of the two boson exchange currents $\Lambda_{0,ij}^{(2)}$ taken between the S-state component φ_S of the wave function is related to the normalization factor $Z^{(2)}$ by an equation similar to equation (4.20),

$$Z^{(2)} = \frac{2}{3}\frac{1}{(2\pi)^9}\int d^3q\, d^3k'\, d^3k'' \varphi^*(\mathbf{q}, \mathbf{k}'') \sum_{i \neq j} \Lambda_{0,ij}^{(2)+\,+}(\mathbf{k}'', \mathbf{k}', M)\varphi(\mathbf{q}, \mathbf{k}). \tag{5.8}$$

Since most of the arguments have been presented already in Section 4.3, we shall keep the discussion of equation (5.8) as brief as possible.

5.2.1. *Contribution from two pion exchange*

The TPE current is represented by the diagrams of Figure 4a, b and c, and equations analogous to (4.44), if only the axial current operator $\gamma_\mu\gamma_5\tau_+$ is replaced by

the isoscalar current operator $\frac{1}{2}\gamma_0$. The relevant spin–isospin matrix elements are listed in Appendix 1. We find the following contribution to the normalization factor $Z^{(2)}$:

$$
\begin{aligned}
-\delta''(4\text{a, b, c}) &= Z^{(2)}(4\text{a, b, c}) \\
&= -f_\pi^4 \Big\{ 4\langle (Y_0'(x_\pi))^2 \rangle \\
&\qquad - 4\langle (1 - x_\pi) Y_0^2(x_\pi) \rangle + 4\lambda^2 \langle (Y_0'(x_\pi))^2 \rangle \\
&\qquad + \lambda^2 \frac{24}{\pi} \frac{m}{m_\pi} \left\langle \frac{1}{x_\pi^2} K_1(2x_\pi) - \frac{1}{x_\pi} K_1'(2x_\pi) \right\rangle \\
&\qquad + \lambda^4 \frac{12}{\pi} \frac{m}{m_\pi} \left\langle \frac{1}{x_\pi^2} K_1(2x_\pi) \right\rangle \Big\}
\end{aligned}
\tag{5.9}
$$

where we have used again the approximation (4.49).

5.2.2. Contribution from two pion exchange with a virtual Δ

The information needed to discuss this particular contribution is contained already in Section 4.3.2. Perhaps it should be mentioned that the interaction of the Δ with the isoscalar current can be derived unambiguously from condition (2.15) using

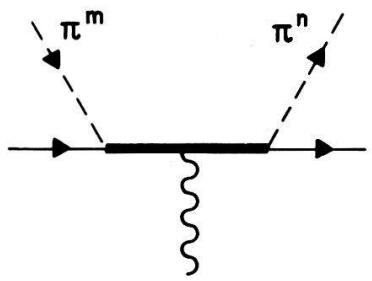

Figure 11
The isoscalar current $j_\mu^{(0)}$ interacting with a virtual Δ (1236).

the process drawn in Figure 10a, whose amplitude is given in (4.53). We find for the amplitude of the process of Figure 11 in the nonrelativistic limit and for positive energy Δ's in the intermediate state

$$
\begin{aligned}
M_a^{(0)} &= M_a^{(0)}(\pi^m(q) + j_0^{(0)}(0) + N(p_1) \to \pi^n(k) + N(p_2)) \\
M_a^{(0)} &= -\frac{f_{\pi N\Delta}}{2m_\pi^2} \frac{1}{(E^\Delta_{\mathbf{p}_2+\mathbf{k}} - m - k_0)^2} \\
&\qquad \times (\tfrac{2}{3}\delta_{nm} - \tfrac{1}{6}[\tau_n, \tau_m])(\tfrac{2}{3}\mathbf{q}\mathbf{k} + \tfrac{1}{3}i(\mathbf{q} \times \mathbf{k})\boldsymbol{\sigma}) \\
E^\Delta_{p_2+k} &= (m_\Delta^2 + (\mathbf{p}_2 + \mathbf{k})^2)^{1/2}.
\end{aligned}
\tag{5.10}
$$

This expression is used to determine the current represented by Figure 4d and f. The box diagram of Figure 4d is essentially a sum of the residues from the pole of nucleon 1 and the pion poles. The crossed box of Figure 4f is given by the pion pole contribution. The evaluation of the nucleon pole contribution requires a slightly more refined

treatment than the one used before and we present it first. The corresponding normalization correction is found to be

$$
\begin{aligned}
-\delta(4\mathrm{d}; N_1) &= Z^{(2)}(4\mathrm{d}; N_1) \\
&= f_\pi^2 \frac{f_{\pi N\Delta}^2}{4\pi} \frac{16}{9} \frac{(4\pi)^2}{(2\pi)^{12}} \int d^3p\, d^3k\, d^3k'\, d^3k'' \\
&\quad \times \varphi^*(\mathbf{p}, \mathbf{k}')\varphi(\mathbf{p}, \mathbf{k}'') m_\pi^{-4} G_\Delta^2(p, k) \\
&\quad \times \frac{1}{\omega'^2 \omega''^2} [\tfrac{3}{2}((\mathbf{k}' - \mathbf{k})(\mathbf{k}'' - \mathbf{k}))^2 - \tfrac{1}{2}(\mathbf{k}' - \mathbf{k})^2(\mathbf{k}'' - \mathbf{k})^2]
\end{aligned} \tag{5.11a}
$$

with

$$
G_\Delta^{-1}(p, k) = m_\Delta - m + \frac{(\mathbf{p}/2 + \mathbf{k})^2}{2m_\Delta} + \frac{(\mathbf{p}/2 - \mathbf{k})^2}{2m}. \tag{5.11b}
$$

Following a similar approach as in Ref. [20], we simplify the calculation by dropping the p-dependence in $G_\Delta(p, k)$. This is a reasonable approximation since the integrand of (5.11a) varies slowly with p. Therefore, we shall use the following expression for $G_\Delta(p, k)$

$$
G_\Delta(p, k) = \frac{m_1^2}{m_1^2 + \mathbf{k}^2} \frac{1}{m_\Delta - m} \tag{5.11c}
$$

$$
m_1^2 = 2mm_\Delta \frac{m_\Delta - m}{m_\Delta + m} \simeq (4.05\, m_\pi)^2.
$$

The integrand of (5.11a) is now quite sensitive to variations of $\mathbf{k}^2$ since the effective mass m_1 is small.

The authors of Ref. [20] assume that the S-state wave function $\varphi(y, x)$ factorizes into a form $u_1(x)u_2(y)$. Since we calculate the matrix element of a highly singular operator, we need to know the 3-nucleon wave function only for small values of x, therefore we put

$$
\varphi(x, y) = \varphi_d(x)u(y)
$$

where $\varphi_d(x)$ is the S-state wave function of the deuteron. This assumption is completely consistent with the model for short range correlations in the 3-body system [18], which we described in Section 4.2.

The matrix element (5.11a) is then given by

$$
-\delta(4\mathrm{d}; N_1) = f_\pi^2 \frac{f_{\pi N\Delta}^2}{4\pi} \left(\frac{m_\pi}{m_\Delta - m}\right)^2 \frac{16}{9} (\chi_2(x_\pi), \chi_2(x_\pi)) \tag{5.12a}
$$

where the scalar product is defined by

$$
(\chi_n(x_\alpha), \chi_m(x_\beta)) = \int_0^\infty dx x^2 \chi_n^*(x_\alpha)\chi_m(x_\beta) \tag{5.12b}
$$

and

$$
\begin{aligned}
\chi_n(x_\pi) = \frac{m_1^2}{\sqrt{x}} \Big\{ & K_\nu(x_1) \int_0^x dx'(x')^{3/2} I_\nu(x_1') Y_n(x_\pi')\varphi_d(x_\pi') \\
& + I_\nu(x_1) \int_x^\infty dx'(x')^{3/2} K_\nu(x_1') Y_n(x_\pi')\varphi_d(x') \Big\}
\end{aligned} \tag{5.12c}
$$

where $\nu = n + \frac{1}{2}$, $x_1 = m_1 x$, and the functions K_ν and I_ν are modified Bessel functions of fractional order.

For the pion pole contributions of the diagrams of Figure 4d and f to the normalization correction we found

$$-\delta(4\mathrm{d}, \mathrm{f}; \pi) = Z^{(2)}(4\mathrm{d}, \mathrm{f}; \pi) = f_\pi^2 \frac{f_{\pi N\Delta}^2}{4\pi} \frac{8}{9} \left\{ -\langle A_{22}^{(2)} \rangle - \langle B_{22} \rangle + \lambda^2 12 \frac{m}{m_\pi} \langle A_{12}^{(1)} \rangle \right\} \tag{5.13}$$

where the definitions (4.58) have been used. The contribution of the current of Figure 4e and g is derived in the same way. The residue of the double pole of nuclear 1 results into a correction

$$-\delta(4\mathrm{e}; N_1) = Z^{(2)}(4\mathrm{e}; N_1) = f_\pi^2 \frac{f_{\pi N\Delta}}{4\pi} \left(\frac{m_\pi}{m_\Delta - m} \right)^2 \frac{16}{9} (\chi_2(x_\pi), \chi_2(x_\pi)) \tag{5.14a}$$

while the pion pole contribution is given by

$$\begin{aligned} -\delta(4\mathrm{e}, \mathrm{g}; \pi) &= Z^{(2)}(4\mathrm{e}, \mathrm{g}; \pi) \\ &= f_\pi^2 \frac{f_{\pi N\Delta}^2}{4\pi} \frac{8}{9} \{ -7\langle A_{31}^{(2)} \rangle + \langle B_{31} \rangle - \lambda^2 6 \langle A_{11}^{(1)} \rangle \}. \end{aligned} \tag{5.14b}$$

Regarding the terms of order λ^0, this result differs from the correction (5.12), since the contributions from the box graph of Figure 4e and the crossed box of Figure 4g have the same sign, while the box and crossed box of Figure 4d and f have opposite signs.

There is an alternative way to calculate the diagrams of Figure 4e and g, as a sum of the residues of the pole of the virtual Δ and the pion poles. The individual residues are singular due to the finite mass difference $m_\Delta - m$, however the sum is regular and leads to a result identical with what we have given in equations (5.13) and (5.14).

5.2.3. Contribution from the exchange of one pion and one vector meson

We continue here the discussion of the effect of vector meson exchange, which we started in Section 4.3.3 and we consider the normalization correction due to the exchange of one pion and one vector meson, which we choose to be the ρ- and ω-meson. The matrix element of the current represented by the graphs of Figure 4a, b, and c, is again very small and the condition (5.3b) gives a normalization correction

$$\begin{aligned} -\delta''_{\rho,\omega}(4\mathrm{a}, \mathrm{b}, \mathrm{c}) &= Z^{(2)}(4\mathrm{a}, \mathrm{b}, \mathrm{c}) \\ &= 0.09 \cdot 10^{-2} \end{aligned}$$

where the value $\lambda = 1$ has been used.

In Ref. [10] we have shown that one can expect more significant effects to arise from the exchange of vector mesons if one of the virtual baryon states is a Δ (1236), and this type of process is illustrated in Figure 4d–g. In order to determine these particular currents, we need to know the amplitudes for ρ-production of pions from a nucleon drawn in Figure 12.

Using the low-energy theorem and the vector meson dominance model, this

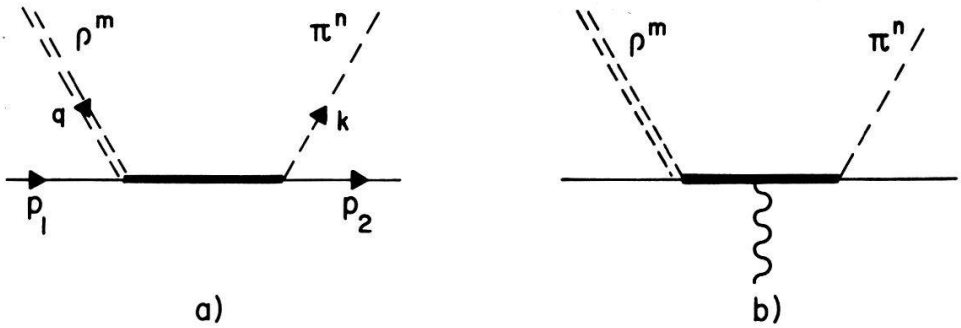

Figure 12
ρ-production of a pion from a nucleon with the nucleon isobar Δ (1236) in the intermediate state. In (b) the virtual Δ interacts with the isoscalar current $j_\mu^{(0)}$.

amplitude can be expressed in terms of pion photoproduction amplitudes $V_i^{(\pm)}$. From Ref. [10], we find an amplitude similar to equation (4.53)

$$M(12\text{a}) = M(\rho_\lambda^m(q) + N(p_1) \to \pi^n(k) + N(p_2))$$
$$M(12\text{a}) = 2g_\rho \bar{u}(\mathbf{p}_2)(\tfrac{1}{2}\delta_{nm} - \tfrac{1}{8}[\tau_n, \tau_m])(\tfrac{1}{2}R_\lambda^{(+)} - R_\lambda^{(-)})u(\mathbf{p}_1) \tag{5.15a}$$

$$\begin{aligned} R_\lambda^{(+)} = {} & \gamma_5 \sigma_{\lambda\nu} q_\nu V_1^{(+)} \\ & + i\gamma_5[(p_1 + p_2)_\lambda qk - (p_1 + p_2)qk_\lambda]V_2^{(+)} \\ & - \epsilon_{\lambda\alpha\sigma\mu} k_\alpha q_\sigma \gamma_\mu V_4^{(+)} \\ & + i\gamma_5[q_\lambda qk - q^2 k_\lambda]V_5^{(+)} \end{aligned} \tag{5.15b}$$

$$R_\lambda^{(-)} = -i\gamma_5[\gamma_\lambda qk - \gamma qk_\lambda]V_3^{(-)} \tag{5.15c}$$

where the indices m and n in equation (5.15a) refer to the isospin of the ρ and ω.

The amplitude for the crossed process (interchange of ρ and π) is given by

$$M^x(12\text{a}) = 2g_\rho \bar{u}(\mathbf{p}_2)(\tfrac{1}{2}\delta_{nm} + \tfrac{1}{8}[\tau_n, \tau_m])(\tfrac{1}{2}R_\lambda^{(+)} + R_\lambda^{(-)})u(p_1). \tag{5.16}$$

The interaction of the isoscalar current with the Δ can be found in the limit of vanishing momentum transfer by comparing the conditions (2.15) and (5.3b). Since the nucleon from which the pion ρ-production of Figure 12a takes place is bound in a nucleus of mass M, the operators $R_\lambda^{(\pm)}$ are functions of the masses M and m_Δ (and independent of m). We put $M = 3m$ and find for the amplitude of the process of Figure 12b

$$M(12\text{b}) \equiv M(\rho_\lambda^m(q) + j_0^{(0)}(0) + N(p_1) \to \pi^n(k) + N(p_2))$$

$$M(12\text{b}) = -g_\rho \bar{u}(\mathbf{p}_2)(\tfrac{1}{2}\delta_{nm} - \tfrac{1}{8}[\tau_n, \tau_m])\left(\frac{1}{2}\frac{d}{dm}R_\lambda^{(+)} - \frac{d}{dm}R_\lambda^{(-)}\right)u(\mathbf{p}_1) \tag{5.17a}$$

$$M^x(12\text{b}) = -g_\rho \bar{u}(\mathbf{p}_2)(\tfrac{1}{2}\delta_{nm} + \tfrac{1}{8}[\tau_n, \tau_m])\left(\frac{1}{2}\frac{d}{dm}R_\lambda^{(+)} + \frac{d}{dm}R_\lambda^{(-)}\right)u(\mathbf{p}_1). \tag{5.17b}$$

The amplitudes $V_i^{(\pm)}$ have been derived in Ref. [21] using a hard-pion current algebra model which satisfies the requirement of gauge invariance for virtual pions. We shall quote only those parts of the amplitudes coming from the exchange of the Δ, and

denote them by $\overline{V}_i^{(\pm)}$. With $s = (p_1 + q)^2$, $t = (q - k)^2$ and $u = (p_2 - q)^2$ we have

$$\overline{V}_1^{(+)} = B_1 t, \quad B_1 = \frac{h^{(+)}}{m_\Delta^2 - m^2}\left(-16 + \frac{8m}{3m_\Delta} + \frac{8m^2}{3m_\Delta^2}\right)$$

$$\overline{V}_2^{(+)} = B_2 + \frac{2q^2}{t - q^2 - k^2} B_5, \quad B_2 = \frac{h^{(+)}}{m_\Delta^2 - m^2} 32$$

$$B_5 = \frac{h^{(+)}}{m_\Delta^2 - m^2}\left(8 + \frac{16m}{3m_\Delta} - \frac{8m^2}{3m_\Delta^2}\right)$$

$$\overline{V}_3^{(-)} = \frac{h^{(+)}}{m_\Delta^2 - m^2} m_\Delta\left(-8 - \frac{4m}{m_\Delta} + \frac{8m^2}{3m_\Delta^2} - \frac{4m^3}{3m_\Delta^2}\right)$$

$$\overline{V}_4^{(+)} = \frac{h^{(+)}}{m_\Delta^2 - m^2} m_\Delta\left(-16 - 24\frac{m}{m_\Delta} - \frac{16m^2}{3m_\Delta^2} + \frac{8m^3}{3m_\Delta^3}\right)$$

$$\overline{V}_5^{(+)} = \frac{u - s}{t^2 - k^2 - q^2} B_5 \tag{5.18}$$

where $h^{(+)} = -0.0667\, m_\pi^{-2}$. If we describe the interaction of the field of ρ with the nucleons by

$$\langle p_2|\rho_\lambda^m(0)|p_1\rangle = g_\rho \bar{u}(\mathbf{p}_2)\tau_m\left(\gamma_\lambda + \frac{\varkappa_v}{2m}\sigma_{\lambda\nu}q_\nu\right)u(\mathbf{p}_1) \tag{5.19}$$

where $q = p_1 - p_2$ and $\varkappa_v = 3.7$, one can evaluate the normalization correction corresponding to the graphs of Figure 4d–g, using the same method as in Sections 4.3.1 and 5.2.2. The main contribution from this type of current is given by the residues of the pole of nucleon 1 of Figure 4d and the double N_1-pole of Figure 4e, where the latter is determined by the derivative of the operators $R_\lambda^{(\pm)}$ with respect to k_0 (the kinematics are the same as in Figure 9, and k is the internal momentum variable). The momentum dependence of the amplitudes $\overline{V}_i^{(\pm)}$ is for our purpose sufficiently accounted for by making the replacement

$$\frac{h^{(+)}}{m_\Delta^2 - m^2} \to \frac{h^{(+)}}{(E^\Delta_{\mathbf{k}+\mathbf{p}/2})^2 - (m - k_0)^2}. \tag{5.20}$$

We find the following normalization corrections

$$-\delta_\rho(4\mathrm{d}; N_1) = Z_\rho^{(2)}(4\mathrm{d}; N_1) = \frac{g_\rho^2 g_\pi}{(4\pi)^2}\frac{m_\rho^3}{m^2 m_\pi}$$
$$\times \{\tfrac{2}{3}a_1'(\chi_2(x_\pi), \chi_2(x_\rho)) + a_3'(\chi_1(x_\pi), \chi_1(x_\rho)) + \tfrac{1}{3}a_5'(\chi_0(x_\pi), \chi_0(x_\rho))\} \tag{5.21a}$$

$$-\delta_\rho(4\mathrm{e}; N_1) = Z_\rho^{(2)}(4\mathrm{e}; N_1) = \frac{g_\rho^2 g_\pi}{(4\pi)^2}\frac{m_\rho^3}{m^2 m_\pi}$$
$$\times \{\tfrac{2}{3}a_1(\chi_2(x_\pi), \chi_2(x_\rho)) + \tfrac{2}{3}a_2(\chi_2(x_\pi), Y_2(x_\rho)\varphi_d(x))$$
$$+ a_3(\chi_1(x_\pi), \chi_1(x_\rho)) - a_4(\chi_1(x_\pi), Y_0'(x_\rho)\varphi_d(x))$$
$$+ \tfrac{1}{3}a_5(\chi_0(x_\pi), \chi_0(x_\rho)) + a_6(\chi_0(x_\pi), Y_0(x_\rho)\varphi_d(x))\} \tag{5.22a}$$

where

$$a_1' = 4B_1 m_\pi^4 - \frac{d}{dm}(4mB_1 + 2mB_2 + 2(1+\varkappa_V)\overline{V}_3^{(-)} + \varkappa_V \overline{V}_4^{(+)})m_\pi^4$$
$$= -1.5734$$
$$a_3' = -2m\frac{d}{dm}B_1\frac{m_\pi^2 + m_\rho^2}{m_\rho}m_\pi^3 - \frac{d}{dm}\left(2mB_2\frac{m_\pi}{m_\rho} + 2mB_5\frac{m_\rho}{m_\pi}\right)m_\pi^4$$
$$= 0.3390$$
$$a_5' = 4B_1 m_\pi^4 - \frac{d}{dm}(4mB_1 + 2mB_2 + 6mB_5 + 8(1+\varkappa_V)\overline{V}_3^{(-)} - 2\varkappa_V V_4^{(+)})m_\pi^4$$
$$= 0.2904 \tag{5.21b}$$
$$a_1 = -(4mB_1 + 2mB_2 + 2(1+\varkappa_V)\overline{V}_3^{(-)} + \varkappa_V \overline{V}_4^{(+)})\frac{2m\, m_\pi^4}{m_\Delta^2 - m^2}$$
$$= -1.5604$$
$$a_2 = (1+\varkappa_V)(-4mB_1 - mB_2 + \tfrac{3}{2}\overline{V}_4^{(+)})\frac{m_\pi^4}{m}$$
$$= 0.5028$$
$$a_3 = -\left(2mB_1\frac{m_\pi^2 + m_\rho^2}{m_\pi m_\rho} + 2mB_2\frac{m_\pi}{m_\rho} + 2mB_5\frac{m_\rho}{m_\pi}\right)\frac{2m\, m_\pi^4}{m_\Delta^2 - m^2}$$
$$= -0.0775$$
$$a_4 = 4\overline{V}_3^{(-)}\frac{m\, m_\pi^3}{m_\rho} + (1+\varkappa_V)(-2mB_1 + \overline{V}_4^{(+)})\frac{m_\pi^2 + m_\rho^2}{m\, m_\rho}m_\pi^3$$
$$= 2.0903$$
$$a_5 = -(4mB_1 + 2mB_2 + 6mB_5 + 8(1+\varkappa_V)\overline{V}_3^{(-)} - 2\varkappa_V \overline{V}_4^{(+)})\frac{2m\, m_\pi^4}{m_\Delta^2 - m^2}$$
$$= -0.3797$$
$$a_6 = (1+\varkappa_V)(-\tfrac{4}{3}mB_1 + \tfrac{2}{3}mB_2 + \overline{V}_4^{(+)})\frac{m_\pi^4}{m}$$
$$= 0.0906. \tag{5.22b}$$

We have also estimated the contribution of the diagrams of Figure 4d–g, but shall not write down the resulting lengthy expressions, since the numerical result is small. We found the following approximate correction

$$\delta_\rho(4\text{d, e, f, g}; \pi) \simeq -0.3 \cdot 10^{-2}$$

where the value $\lambda = 1$ has been used.

6. Numerical Results and Discussion

We shall collect in this section the result of the evaluation of the matrix elements of the one- and two-body exchange currents discussed in preceding sections. We used

the following values for masses and coupling constants

$$m_\pi = 139 \text{ MeV}, \quad m = 939 \text{ MeV}, \quad m_\rho = 770 \text{ MeV},$$
$$m_\Delta - m = 297 \text{ MeV},$$
$$f_\pi^2 = 0.081, \quad \frac{f_{\Delta\pi N}^2}{4\pi} = 0.36, \quad 4\frac{g_\rho^2}{4\pi} = 2.4 \tag{6.1}$$

and in Appendix 3, we have discussed the matrix elements necessary for the evaluation of two pion exchange currents. The following numerical values have been obtained with the parameters (4.39):

$$\frac{2}{\pi}\left\langle \frac{1}{x_\pi^2} K_1(2x_\pi) \right\rangle = 0.0566$$
$$\frac{2}{\pi}\left\langle \frac{1}{x_\pi^2} K_1(2x_\pi) - \frac{1}{x_\pi} K_1'(2x_\pi) \right\rangle = 0.1182 \tag{6.2a}$$
$$\langle A_{11}^{(1)}\rangle = -0.0877 \quad \langle A_{12}^{(1)}\rangle = -0.0249$$
$$\langle A_{21}^{(1)}\rangle = -0.0546 \quad \langle A_{22}^{(2)}\rangle = -0.1499$$
$$\langle A_{31}^{(2)}\rangle = -0.1791$$
$$\langle B_{22}\rangle = 0.0106 \quad \langle B_{31}\rangle = 0.0129. \tag{6.2b}$$

The scalar products (5.12b) have been calculated numerically also with the deuteron wave function as given in (4.38) and (4.39) with the result

$$(\chi_2(x_\pi), \chi_2(x_\pi)) = 1.8391$$
$$(\chi_2(x_\pi), \chi_2(x_\rho)) = 2.4102\ 10^{-3}$$
$$(\chi_2(x_\pi), Y_2(x_\rho)\varphi_d(x)) = 6.1424\ 10^{-3}$$
$$(\chi_1(x_\pi), \chi_1(x_\rho)) = 5.5848\ 10^{-4}$$
$$(\chi_1(x_\pi), Y_0'(x_\rho)\varphi_d(x)) = -9.7911\ 10^{-4}$$
$$(\chi_0(x_\pi), \chi_0(x_\rho)) = 2.8048\ 10^{-4}$$
$$(\chi_0(x_\pi), Y_0(x_\rho)\varphi_d(x)) = 3.7879\ 10^{-4}. \tag{6.20}$$

The corrections of the GT matrix element already published in the literature have been summarized in Table I. We note that the relativistic correction given in Table I is already the net result, i.e. relativistic renormalization corrections are included (compare the discussion in Appendix 2).

Table II shows that two pion exchange currents considerably reduce the GT matrix element and the largest effect is produced again by the isobaric current (i.e. when there is a Δ (1236) in a virtual state). The various normalization corrections of the nuclear wave function presented in Table III clearly demonstrate that those intermediate states which produce an appreciable change in the wave function, which consequently have large probabilities, will in general lead also to large exchange current effects. We note also that in the case of a pure pseudoscalar pion–nucleon coupling, i.e. for $\lambda = 1$, we have large contributions from those processes with nucleon–anti-nucleon pairs in virtual states. This fact has been discussed also by Partovi and Lomon [1] in their derivation of a nuclear potential from meson theory. This effect is not the result of

Table I
Corrections δ of the GT matrix element $M_A^{(0)}$ as published in Refs. [5, 9, 10]. δ_1 is the resulting correction of the GT matrix element $M_A^{(1)}$, both matrix elements are defined in equation (4.9).

Figure	Intermediate states	δ (%)
3b	$B = \pi, B' = \rho$	2.43
3c	$B = \pi, N^* = N^*(\frac{3}{2}^+, \frac{3}{2})$	12.36
3c	$B = \pi, N^* = N^*(\frac{1}{2}^+, \frac{1}{2})$	0.44
3c	$B = \pi, N^* = N^*(\frac{3}{2}^-, \frac{1}{2})$	−0.30
3c	$B = \rho, N^* = N^*(\frac{3}{2}^+, \frac{3}{2})$	−2.55
Pair creation correction of eq. (4.22)		$0.50\,\lambda$
Relativistic correction of eq. (4.14)		−0.24
Total: $\delta = (12.14 + 0.5\,\lambda)\%$		
$\delta_1 = \dfrac{\delta}{\lvert\varphi_S\rvert^2 + \frac{1}{3}\lvert\varphi_D\rvert^2 - \frac{1}{3}\lvert\varphi_{S'}\rvert^2} = \begin{cases} 13.42 \text{ for } \lambda = 0.41 \\ 13.20 \text{ for } \lambda = 0 \end{cases}$		

especially singular exchange current operators, but is merely the reflection of the large mass ratio m/m_π which multiplies the corresponding matrix elements, and the fact that contributions from box graphs and crossed box graphs in several cases add with the same sign. Combining the corrections listed in Tables I, II and III, we find the following result for the Gamow–Teller matrix element

$$\text{theory: } M_A = M_A^{(1)}(1 + \delta_1 + \delta_2 + \delta'') \tag{6.3a}$$

$$\delta_1 + \delta_2 + \delta'' = \begin{cases} 5.28\% \text{ for } \lambda = 0 \\ 5.89\% \text{ for } \lambda = 0.41 \\ 11.54\% \text{ for } \lambda = 1. \end{cases} \tag{6.3b}$$

This should be compared with the experimental matrix element [22], $|M_A|^2 = 2.84 \pm 0.06$ (see also Ref. [23], page 90, for a discussion), which with the GT matrix

Table II
Corrections δ of the GT matrix element $M_A^{(0)}$ due to two-pion exchange currents as calculated in equations (4.30), (4.50) and (4.57). δ_2 is the resulting correction of the GT matrix element $M_A^{(1)}$ as defined in (4.9)

		δ (%)		
Figure	Pole	$0(\lambda^0)$	$0(\lambda^2)$	$0(\lambda^4)$
4a	N_1		−1.61	
4a, b, c	π	−0.35	−0.32	1.00
4h, i, j	π	−0.58	−10.21	
Total: $\delta = \begin{cases} -2.94\% \text{ for } \lambda = 0.41 \\ -0.93\% \text{ for } \lambda = 0 \end{cases}$				
$\delta_2 = \dfrac{\delta}{\lvert\varphi_S\rvert^2 + \frac{1}{3}\lvert\varphi_D\rvert^2 - \frac{1}{3}\lvert\varphi_{S'}\rvert^2} = \begin{cases} -3.20\% \text{ for } \lambda = 0.41 \\ -1.01\% \text{ for } \lambda = 0 \end{cases}$				

Table III
Normalization correction of the wave function caused by the exchange of two pions and the exchange of one pion and one ρ-meson. The TPE contribution are given in equations (5.7), (5.9), (5.12)–(5.14), and the VME contribution in (5.21), (5.22)

			$\delta'' = -Z^{(2)}(\%)$	
Figure	Pole	$0(\lambda^0)$	$0(\lambda^2)$	$0(\lambda^4)$
	Two pion exchange			
4a	N_1		−2.68	
4a, b, c	π	1.04	13.64	3.01
4d	N_1	−2.09		
4e	N_1	−2.09		
4d, f	π	−0.36	5.22	
4e, g	π	−3.59	−1.36	
	Vector meson exchange			
4d	N_1	0.56		
4e	N_1	−0.38		
Total: $\delta'' = \begin{cases} -4.33\% \text{ for } \lambda = 0.41 \\ -6.91\% \text{ for } \lambda = 0 \end{cases}$				

element $M_A^{(1)}$ as given in equation (4.9) defines the correction δ_{exp} demanded by experiment

$$\text{experiment: } M_A = M_A^{(1)}(1 + \delta_{\text{exp}})$$
$$\delta_{\text{exp}} = (5.7 \pm 1.2)\%. \tag{6.4}$$

The theoretical value (6.3b) is consistent with experiment for $0 \leqslant \lambda \leqslant 0.6$ and the admixture of a derivative pion–nucleon coupling (pseudovector coupling), as defined in 4.1 is quite important to achieve agreement of theory and experiment. We note especially that the value $\lambda = 0.41$, which Gross [13] used in his fits of OBE potentials gives a consistent result also in our case.

The particular values for the parameter λ chosen above should not be taken too seriously since the isobar current corrections listed in Table I, based upon the work of Refs. [8, 9], are probably too large because the momentum dependence of the Δ-propagator has been neglected in those calculations. A preliminary investigation using the methods presented in Section 5.2.2 and the model of the D-state wave function of Ref. [20] indicates that inclusion of the correct momentum dependence of the virtual Δ reduces the published values, which are to be multiplied by a factor of about $\frac{1}{2}$. Consequently, values of $\lambda \simeq 1$, i.e. a dominantly pseudoscalar pion–nucleon coupling would be favored.

In writing down the corrections listed in Tables II and III, which then lead to the total correction of equation (6.3b), we have omitted the small vector meson exchange contributions, estimates of which have been given in Sections 4.3.3 and 5.2.3. We further note that in general the vector meson exchange corrections (excluding the contribution of the current of Figure 3b) are small and since these can be interpreted, as has been mentioned in Section 4.3.3, as an approximation of the contribution from three pion exchange currents, we expect the latter to be small also. The same is true for 3 nucleon currents which we have neglected, based upon investigations of the effect of three body forces which seems to be small. Moreover, it does not seem

reasonable to discuss in detail these more complicated processes without at the same time improving the field theoretic model (we mention the problem of off-shell behavior of the meson–baryon vertices) and more correctly account for the wave function at short distance, the latter becomes even more important for higher order processes. Therefore, in order to obtain a more accurate description of mesonic exchange effects in nuclei, besides increasing appreciably the number and complexity of graphs that should be included, one has to solve quite fundamental problems.

In summary, it is seen that the more modest program of this paper is already able to explain the dominant features of meson exchange effects sufficiently, as far as these show up in the GT matrix element for the triton β-decay, to achieve consistency of theoretical and experimental predictions.

Acknowledgment

The author is grateful to G. Rasche for discussions and especially to P. v. Hoyningen who performed the numerical calculations of the numerous nuclear matrix elements given in equations (6.2).

Appendix 1

Matrix elements of two-body operators for three particle bound states. Matrix elements of spin-isospin operators. The matrix elements of two-body exchange currents for three particle bound states which are considered in this paper are usually given in momentum space. Generally, we have

$$\left\langle \sum_{i\neq j} E_{ij} \right\rangle = \frac{1}{(2\pi)^{12}} \sum_{i\neq j\neq l} \int d^3q_l\, d^3k_l\, d^3k_l'\, d^3k_l'' \times \varphi^*(\mathbf{p}_l, \mathbf{k}_l'')E_{ij}(\mathbf{k}_l, \mathbf{k}_l', \mathbf{k}_l'')\varphi(\mathbf{p}_l, \mathbf{k}_l') \tag{A1.1}$$

where we have chosen the momentum variables defined in (3.16) and (3.17). A typical two boson exchange current has been displayed in Figure 8.

In evaluating this matrix element, we shall not use the full wave function, but retain only the symmetric S-state component. This part of the wave function does not change if different configurations $\{\mathbf{p}_l, \mathbf{k}_l\}$, $l = 1, 2, 3$ are employed, and we can use just one pair of integration variables $\mathbf{p}, \mathbf{k}$. The above matrix element then can be put in a more simple form

$$\left\langle \sum_{i\neq j} E_{ij} \right\rangle = \frac{1}{(2\pi)^{12}} \int d^3p\, d^3k\, d^3k'\, d^3k'' \times \varphi^*(\mathbf{p}, \mathbf{k}') \sum_{i\neq j} E_{ij}(\mathbf{k}, \mathbf{k}', \mathbf{k}'')\varphi(\mathbf{p}, \mathbf{k}''). \tag{A1.2}$$

In the nonrelativistic limit, the operator E_{ij} usually is separable, which means that it can be split in the following way

$$E_{ij}(\mathbf{k}, \mathbf{k}', \mathbf{k}'') = f_{ij}(\mathbf{k} - \mathbf{k}')g_{ij}(\mathbf{k} - \mathbf{k}''). \tag{A1.3}$$

This property is crucial to make possible the treatment of two boson exchange effects with a reasonable expense. The consequence of (A1.3) can be seen most clearly if the

matrix element (A1.2) is expressed in terms of the configuration space wave function which is given through the relation

$$\varphi(\mathbf{p}_l, \mathbf{k}_l) = \int d^3y_l\, d^3x_{ij}\, e^{i\mathbf{p}_l\mathbf{y}_l}\, e^{i\mathbf{k}_l\mathbf{x}_{ij}}\varphi(\mathbf{y}_l, \mathbf{x}_{ij}) \tag{A1.4}$$

where position variables are defined in analogy to equations (3.16) and (3.17)

$$\mathbf{x}_1 + \mathbf{x}_2 + \mathbf{x}_3 = 0; \quad \mathbf{x}_{23} = \mathbf{x}_2 - \mathbf{x}_3, \quad \mathbf{y}_1 = \mathbf{x}_1 - \frac{\mathbf{x}_2 + \mathbf{x}_3}{2} \tag{A1.5}$$

and the cyclic permutations $\mathbf{x}_{12}$, $\mathbf{y}_3$ and $\mathbf{x}_{31}$, $\mathbf{y}_2$. Since we are dealing exclusively with the symmetric S-state wave function, it is sufficient to use only one pair of variables, denoted by $\mathbf{x}$, $\mathbf{y}$. For the matrix element (A1.2) we find with the property (A1.3)

$$\left\langle \sum_{i\neq j} E_{ij} \right\rangle = \int d^3y\, d^3x \varphi^*(\mathbf{y}, \mathbf{x}) \sum_{i\neq j} f_{ij}^*(\mathbf{x}) g_{ij}(\mathbf{x}) \varphi(\mathbf{y}, \mathbf{x}) \tag{A1.6}$$

$$f_{ij}^*(\mathbf{x}) = \frac{1}{(2\pi)^3} \int d^3q\, e^{i\mathbf{q}\mathbf{x}} f_{ij}^*(\mathbf{q})$$

$$g_{ij}(\mathbf{x}) = \frac{1}{(2\pi)^3} \int d^3q\, e^{-i\mathbf{q}\mathbf{x}} g_{ij}(\mathbf{q}). \tag{A1.7}$$

The symmetric S-state wave function can be written as

$$\varphi(y, x) = \psi^{mt} R(y, x) \tag{A1.8}$$

where ψ^{mt} is the totally anti-symmetric spin-isospin function, m, t are the 2-components of the total spin and isospin respectively.

If we represent the operator $f_{ij}^*(\mathbf{x}) g_{ij}(\mathbf{x})$ as a sum of irreducible tensor operators in configuration space, only the scalar operators contribute to the matrix element (A1.6):

$$f_{ij}(\mathbf{x}) g_{ij}(\mathbf{x}) = \sum_{\nu} 0_{ij}(\nu) h_\nu(x) + \text{tensors of rank } r \geqslant 1 \text{ in configuration space.} \tag{A1.9}$$

The operators $0_{ij}(\nu)$ are functions of the spin matrices $\boldsymbol{\sigma}_i$, $\boldsymbol{\sigma}_j$ and the isospin matrices $\boldsymbol{\tau}_i$, $\boldsymbol{\tau}_j$, and the index ν numbers the various scalars that can be formed. The c-number function $h_\nu(x)$ depends upon $x = |\mathbf{x}|$ only.

The matrix element (A1.6) is now simply given by

$$\left\langle \sum_{i\neq j} E_{ij} \right\rangle = \left\langle \psi^{m't'} \middle| \sum_{i\neq j} 0_{ij}(\nu) \middle| \psi^{mt} \right\rangle \langle h_\nu(x) \rangle \tag{A1.10}$$

$$\langle h_\nu(x) \rangle = \int d^3y\, d^3x |R(x, y)|^2 h_\nu(x). \tag{A1.11}$$

Using the results of Section 4.2, we can simplify this matrix element with equation (4.34) in the following way

$$\langle h_\nu(x) \rangle = \int_0^\infty dx x^2 g(x) h_\nu(x). \tag{A1.12}$$

In the treatment of the triton β-decay, which is a spin $\frac{1}{2}$, isospin $\frac{1}{2}$ system, we shall encounter the following matrix elements:

$$\left\langle \psi^{m't'} \middle| \frac{1}{2} \sum_{i \neq j} 0_{m,ij}(\nu) \middle| \psi^{mt} \right\rangle = c_\nu \left\langle \psi^{m't'} \middle| \sum_{i=1}^{3} (\sigma_i)_m (\tau_i)_+ \middle| \psi^{mt} \right\rangle$$

$$\begin{aligned} 0_{m,ij}(1) &= (\boldsymbol{\sigma}_i \times \boldsymbol{\sigma}_j)_m (\boldsymbol{\tau}_i \times \boldsymbol{\tau}_j)_+ \quad \text{and} \quad c_1 = 4 \\ 0_{m,ij}(2) &= (\boldsymbol{\sigma}_i - \boldsymbol{\sigma}_j)_m (\boldsymbol{\tau}_i - \boldsymbol{\tau}_j)_+ \quad \text{and} \quad c_2 = 4 \\ 0_{m,ij}(3) &= (\boldsymbol{\sigma}_i + \boldsymbol{\sigma}_j)_m (\boldsymbol{\tau}_i + \boldsymbol{\tau}_j)_+ \quad \text{and} \quad c_3 = 0. \end{aligned} \tag{A1.13}$$

Matrix elements of operators that are not fully symmetric under the interchange of all particle coordinates vanish. For a more general discussion, we refer to [5].

In calculating renormalization corrections of the wave functions ^{3}H and ^{3}He, we made use of the following matrix elements:

$$\left\langle \psi^{mt} \middle| \sum_{i \neq j} 0_{ij}(\nu) \middle| \psi^{mt} \right\rangle = d_\nu$$

$$\begin{aligned} 0_{ij}(1) &= \boldsymbol{\tau}_i \boldsymbol{\tau}_j \quad \text{and} \quad d_1 = -6 \\ 0_{ij}(2) &= (\boldsymbol{\tau}_i \boldsymbol{\tau}_j)^2 \quad \text{and} \quad d_2 = 30 \\ 0_{ij}(3) &= (\boldsymbol{\tau}_i \boldsymbol{\tau}_j)(\boldsymbol{\sigma}_i \boldsymbol{\sigma}_j) \quad \text{and} \quad d_3 = -18 \\ 0_{ij}(4) &= (\boldsymbol{\tau}_i \boldsymbol{\tau}_j)^2 S_{ij}^2 \quad \text{and} \quad d_4 = 216 \\ 0_{ij}(5) &= \boldsymbol{\sigma}_i \boldsymbol{\sigma}_j \quad \text{and} \quad d_5 = -6. \end{aligned} \tag{A1.14}$$

Appendix 2

Relativistic corrections to the matrix element of the axial vector current. We have expressed the Gamow–Teller matrix element in terms of the wave function φ, equation (4.9), and in equation (4.8) we have the matrix element of the same operator between relativistic wave functions ψ^+. From the discussion in Section 2, we know that the difference between these two matrix elements is a relativistic correction. Using the wave equations for ψ^+ and φ, equations (2.16) and (2.21), and including only the one pion exchange part of the potential as given in equation (4.17), then the matrix element of the current represented in Figure 13a corresponds to

(a) the matrix element of the current operator $\boldsymbol{\sigma}_i(\tau_i)_+$ between relativistic wave functions ψ^+, if nucleon 1 is put on the mass shell and only positive energy states of nucleon 2 are included (negative energy states are discussed in Section 4.1.2),

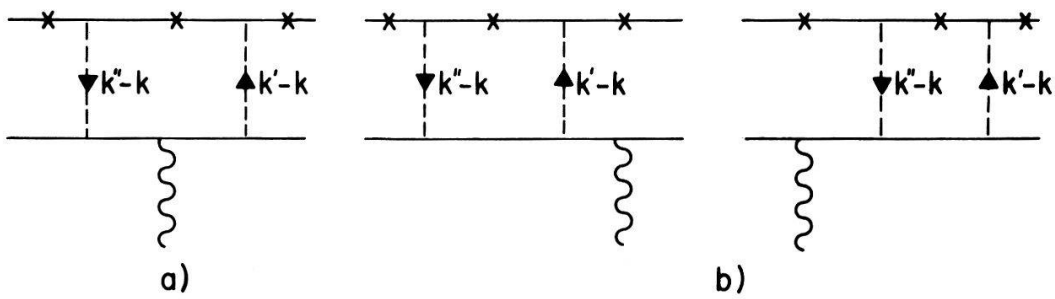

Figure 13
Diagrams required to determine relativistic corrections of the wave function due to the use of a nonrelativistic OPE potential instead of a relativistic one.

(b) equation (4.9a) if both nucleons are on-shell and the nonrelativistic limit is taken for all propagators and vertex functions.

The use of different nucleon propagators in the relativistic and nonrelativistic case results into a kinematic correction as shown by and discussed after equation (4.10). Therefore, in this appendix we shall merely calculate the difference between evaluating the matrix element of the current of Figure 13a with relativistic and nonrelativistic OPE potentials. For the box diagram, we use the same kinematics as in Figure 9. Nucleon 1 is on the mass shell

$$k_0 = -\frac{M}{3} + \frac{p_0}{2} + E_{\mathbf{k}-1/2\mathbf{p}}$$

and analogous conditions hold for k_0' and k_0''. The positive-energy propagator of nucleon 2 is then $-1/2k_0$. The pion propagators are expanded in the following way

$$\frac{1}{m_\pi^2 - (k' - k)^2} \simeq \frac{1}{\omega'^2} + \frac{(k_0' - k_0)^2}{\omega'^4}$$

$$\frac{1}{m_\pi^2 - (k'' - k)^2} \simeq \frac{1}{\omega''^2} + \frac{(k_0'' - k_0)^2}{\omega''^4}$$

$$\omega'^2 = m_\pi^2 + (\mathbf{k}' - \mathbf{k})^2, \quad \omega''^2 = m_\pi^2 + (\mathbf{k}'' - \mathbf{k})^2 \tag{A2.1}$$

and the terms of order $1/\omega^4$ in (A2.1) will give rise to a relativistic correction.

The difference between the relativistic and the nonrelativistic πNN-vertex essentially is again a kinematic correction which is cancelled by the corresponding contribution to the normalization correction, and we do not consider it here.

We shall now discuss the corrections to the GT matrix element resulting from the various relativistic correction terms of equation (A2.1), where we use the methods of Section 4.3. Since we calculate small correction terms, it is admissible to replace the relativistic wave function ψ^+ by φ in taking matrix elements.

The terms k_0^2/ω'^4 and k_0^2/ω''^4

The current associated with this term can be derived starting from Figure 13a. We shall take the matrix element of this current between S-state components of the wave function, and therefore we write down only that part of the current which is a scalar in momentum space and nonvanishing spin–isospin matrix combinations:

$$\Lambda_{m,12}(13\text{a}) = \frac{g_\pi^4}{(2\pi)^3}\frac{1}{(2m)^4}\int d^3k(\tau_1 - \tau_2)_+(\sigma_1 - \sigma_2)_{m\frac{1}{4}}(\mathbf{k}'' - \mathbf{k})^2(\mathbf{k}' - \mathbf{k})^2$$
$$\times \frac{1}{4k_0^2}\left(\frac{k_0^2}{\omega'^2} + \frac{k_0^2}{\omega''^2}\right)\frac{1}{\omega'^2}\frac{1}{\omega''^2}. \tag{A2.2}$$

If we insert this current into equation (4.20), replacing of course $\Lambda_{m,ij}^{++}$ by $\Lambda_{m,ij}(13\text{a})$, and using the methods of Appendix 1, we find a correction to the GT matrix element

$$\delta'(13\text{a}) = f_\pi^4\left\langle\left(\frac{x_\pi}{2} - 1\right)Y_0^2(x_\pi)\right\rangle. \tag{A2.3}$$

The terms $-2k_0k_0'/\omega'^4$ *and* $-2k_0k_0''/\omega''^4$

The matrix element of the current associated with these terms cannot straightforwardly be determined from Figure 13a. It can be cast however into a more suitable form by using the wave equation (2.16) for ψ^+ to arrive at the matrix element of a current which is now represented by one of the diagrams of Figure 13b. This current is given, again except for tensor terms in momentum space, by

$$\begin{aligned}\Lambda_{m,12}(13\text{b}) = -\frac{g_\pi^4}{(2\pi)^3}\frac{1}{(2m)^4}\int d^3k\Big\{&(\tau_1 - \tau_2)_+(\sigma_1 - \sigma_2)_m \\ &\times [\tfrac{10}{12}((\mathbf{k}'' - \mathbf{k})(\mathbf{k}' - \mathbf{k}))^2 + \tfrac{5}{12}(\mathbf{k}'' - \mathbf{k})^2(\mathbf{k}' - \mathbf{k})^2] \\ &+ (\boldsymbol{\tau}_1 \times \boldsymbol{\tau}_2)_+(\boldsymbol{\sigma}_1 \times \boldsymbol{\sigma}_2)_m \\ &\times \tfrac{2}{3}[((\mathbf{k}'' - \mathbf{k})(\mathbf{k}' - \mathbf{k}))^2 - (\mathbf{k}'' - \mathbf{k})^2(\mathbf{k}' - \mathbf{k})^2]\Big\} \\ &\times \left(\frac{1}{4k_0k_0'}\frac{2k_0k_0'}{\omega'^2} + \frac{1}{4k_0k_0''}\frac{2k_0k_0''}{\omega''^2}\right)\frac{1}{\omega'^2}\frac{1}{\omega''^2}.\end{aligned} \tag{A2.4}$$

This current gives a correction

$$\delta'(13\text{b}) = -f_\pi^4\{12\langle(Y_0'(x_\pi))^2\rangle + 5\langle x_\pi Y_0^2(x_\pi)\rangle + 2\langle Y_0^2(x_\pi)\rangle\}. \tag{A2.5}$$

The terms $k_0'^2/\omega'^4$ *and* $k_0''^2/\omega''^4$

The nonrelativistic wave function φ is the solution of the Schrödinger equation (2.21), and the nonrelativistic potential (2.22) can be derived from the quasipotential equation (2.6) by using the nonrelativistic Green's function g of equation (2.18). The OPE part of this potential is simply the nonrelativistic limit of the covariant OPE interaction, and this fact has been used above to derive the relativistic correction. On the other hand, the TPE part of the potential (2.22) contains relativistic correction terms due to the fact that the internal momentum variable is not restricted to nonrelativistic values. Expressions like $k_0'^2/\omega'^4$ and $k_0''^2/\omega''^4$ which appear when the potential is expanded as in equation (A2.1) are just such correction terms and are already included when the matrix element is written in terms of the nonrelativistic wave function φ, equation (4.9).

There is a corresponding relativistic correction of the normalization of the wave function. Following the arguments of Section 5, we can derive the resulting additional correction to the GT matrix element in a similar manner as above and find

$$\begin{aligned}\delta''(13\text{a}) &= f_\pi^4\{12\langle(Y_0'(x_\pi))^2\rangle + 5\langle x_\pi Y_0^2(x_\pi)\rangle + 2\langle Y_0^2(x_\pi)\rangle\} \\ \delta''(13\text{b}) &= -2\delta''(13\text{a}).\end{aligned} \tag{A2.6}$$

The complete relativistic correction to the GT matrix element due to the use of a wave function which is the solution of a wave equation with a nonrelativistic potential, instead of the relativistic wave function ψ^+ is therefore given by

$$\begin{aligned}\delta'(13\text{a, b}) + \delta''(13\text{a, b}) &= -f_\pi^4\{\langle Y_0^2(x_\pi)\rangle - \tfrac{1}{2}\langle x_\pi Y_0^2(x_\pi)\rangle\}. \\ &= -0.028\%.\end{aligned} \tag{A2.7}$$

Again we have a strong cancellation of the relativistic correction δ', calculated with the wave function φ normalized to unity, by the relativistic correction of the wave function normalization δ''.

Appendix 3

Calculation of matrix elements. The residue of the pion pole of TPE graphs generates matrix elements of the type given e.g. in equations (4.50) and (4.57). We shall show here how the transformation (4.49) can be used to simplify these matrix elements.

In writing down equation (4.50) we used the following identities:

$$\frac{1}{\omega''^2 - \omega'^2}\left(\frac{1}{2\omega''} - \frac{1}{2\omega'}\right) = -\frac{1}{\pi}\int_0^\infty dz\,\frac{1}{z^2 + \omega'^2}\,\frac{1}{z^2 + \omega''^2} \tag{A3.1}$$

$$\frac{1}{\omega''^2 - \omega'^2}\left(\frac{1}{2\omega''^3} - \frac{1}{2\omega'^3}\right) = -\frac{2}{\pi}\int_0^\infty dz\left[\frac{1}{(z^2 + \omega'^2)^2(z^2 + \omega''^2)} + \frac{1}{(z^2 + \omega'^2)(z^2 + \omega''^2)^2}\right]. \tag{A3.2}$$

The resulting matrix elements can, with the help of (4.49), be reexpressed in terms of the Bessel function (4.51):

$$\int_0^\infty dz\,\frac{m_z^2}{m_\pi^3}\langle Y_0^2(x_z)\rangle = \left\langle \frac{1}{x_\pi^2} K_1(2x_\pi)\right\rangle \tag{A3.3}$$

$$\int_0^\infty dz\,\frac{m_z^2}{m_\pi^3}\langle Y_0^2(x_z)(1 + x_z)\rangle = \left\langle \frac{1}{x_\pi^2} K_1(2x_\pi) - \frac{1}{x_\pi} K_1'(2x_\pi)\right\rangle \tag{A3.4}$$

with $x_z = m_z x$ and

$$m_z^2 = z^2 + m_\pi^2. \tag{A3.5}$$

The matrix elements $\langle A_{nm}^{(r)}\rangle$ and $\langle B_{nm}\rangle$ defined in equation (4.58) can be treated in a similar manner. As an example of the method, we shall derive the matrix element $\langle A_{31}^{(2)}\rangle$. Starting from the identity

$$\begin{aligned}
&\frac{1}{\omega''^2 - \omega'^2}\left(\frac{1}{2\omega''^3(m_\Delta - m + \omega'')} - \frac{1}{2\omega'^3(m_\Delta - m + \omega')}\right)\\
&= \frac{1}{(m_\Delta - m)^2}\,\frac{1}{2\omega'^2\omega''^2}\\
&\quad - \frac{1}{\pi}\,\frac{1}{m_\Delta - m}\int_0^\infty dz\,\frac{1}{[z^2 + (m_\Delta - m)^2](z^2 + \omega'^2)(z^2 + \omega''^2)}\\
&\quad - \frac{2}{\pi}\,\frac{1}{m_\Delta - m}\int_0^\infty dz\left[\frac{1}{(z^2 + \omega'^2)(z^2 + \omega''^2)^2} + \frac{1}{(z^2 + \omega'^2)^2(z^2 + \omega''^2)}\right]
\end{aligned} \tag{A.36}$$

the matrix element is given by

$$\begin{aligned}
\langle A_{31}^{(2)}\rangle &= \frac{m_\pi^2}{(m_\Delta - m)^2}\langle \tfrac{1}{3}Y_2^2(x_\pi) + \tfrac{1}{6}Y_0^2(x_\pi)\rangle\\
&\quad - \frac{1}{\pi}\,\frac{1}{m_\Delta - m}\int_0^\infty dz\,\frac{1}{z^2 + (m_\Delta - m)^2}\,\frac{m_z^6}{m_\pi^4}\langle \tfrac{2}{3}Y_2^2(x_z) + \tfrac{1}{3}Y_0^2(x_z)\rangle\\
&\quad - \frac{4}{\pi}\,\frac{1}{m_\Delta - m}\int_0^\infty dz\,\frac{m_z^4}{m_\pi^4}\left\langle (Y_0'(x_z))^2 + \frac{x_z}{2}\,Y_0^2(x_z)\right\rangle.
\end{aligned} \tag{A.37}$$

The remaining integration was done numerically and the values of the various matrix elements are given in (6.2).

REFERENCES

[1] M. H. Partovi and E. L. Lomon, Phys. Rev. *D2*, 1999 (1970). M. Chemtob, J. W. Durso and D. O. Riska, Nucl. Phys. *B38*, 141 (1972).
[2] R. M. Woloshyn and A. D. Jackson, Nucl. Phys. *B64*, 269 (1973).
[3] S. Mandelstam, Proc. Roy. Soc. *A233*, 248 (1955).
[4] R. N. Faustov, Ann. Phys. *78*, 176 (1973).
[5] M. Chemtob and M. Rho, Nucl. Phys. *A163*, 1 (1971).
[6] J. Blomqvist, Phys. Lett. *32B*, 1 (1970).
[7] D. O. Riska and G. E. Brown, Phys. Lett. *32B*, 662 (1970).
[8] E. Fischbach, E. P. Harper, Y. E. Kim, A. Tubis and W. K. Cheng, Phys. Lett. *38B*, 8 (1972).
[9] Y. E. Kim, E. Fischbach, E. P. Harper, A. Tubis, W. K. Cheng and M. Rho, *Few particle problems in the nuclear interaction* (ed. J. Slaus *et al.*, North-Holland, 1972), p. 433.
[10] W. Jaus, Phys. Rev. *C9*, 2459 (1974).
[11] A. M. Green and T. Schucan, Nucl. Phys. *A188*, 289 (1972).
[12] F. Gross, Phys. Rev. *186*, 1448 (1969).
[13] F. Gross, Phys. Rev. *D10*, 223 (1974).
[14] C. Fronsdal and R. W. Huff, Phys. Rev. *D3*, 933 (1971).
[15] We use the metric, the conventions and the notations as in S. S. Schweber, *An Introduction to Relativistic Quantum Field Theory* (Harper and Row, John Weatherill, N.Y., 1964), except for the definition of γ_5. We use $\gamma_5 = i\gamma^0\gamma^1\gamma^2\gamma^3$.
[16] R. Blankenbecler and R. Sugar, Phys. Rev. *142*, 1051 (1966).
[17] S. L. Adler and Y. Dothan, Phys. Rev. *151*, 1267 (1966).
[18] E. Hadjimichael, S. N. Yang and G. E. Brown, Phys. Lett. *39B*, 594 (1972).
[19] R. V. Reid, Ann. Phys. *50*, 441 (1968).
[20] A. D. Jackson and D. O. Riska, Phys. Lett. *50B*, 207 (1974).
[21] G. M. Radutsky and V. A. Serdjutsky, Nucl. Phys. *B54*, 302 (1973).
[22] R. C. Salgo and H. H. Staub, Nucl. Phys. *A138*, 417 (1969).
[23] R. J. Blin-Stoyle, *Fundamental Interactions and the Nucleus* (North-Holland, Amsterdam, 1973).