**Zeitschrift:** IABSE reports = Rapports AIPC = IVBH Berichte
**Band:** 83 (1999)

**Artikel:** Experimental and analytical investigation of sandwich panels
**Autor:** Sigmund, Vladimir / Herman, Kresimir / Sigmund, Darko
**DOI:** https://doi.org/10.5169/seals-62898

**Nutzungsbedingungen**
Die ETH-Bibliothek ist die Anbieterin der digitalisierten Zeitschriften auf E-Periodica. Sie besitzt keine Urheberrechte an den Zeitschriften und ist nicht verantwortlich für deren Inhalte. Die Rechte liegen in der Regel bei den Herausgebern beziehungsweise den externen Rechteinhabern. Das Veröffentlichen von Bildern in Print- und Online-Publikationen sowie auf Social Media-Kanälen oder Webseiten ist nur mit vorheriger Genehmigung der Rechteinhaber erlaubt. Mehr erfahren

**Conditions d'utilisation**
L'ETH Library est le fournisseur des revues numérisées. Elle ne détient aucun droit d'auteur sur les revues et n'est pas responsable de leur contenu. En règle générale, les droits sont détenus par les éditeurs ou les détenteurs de droits externes. La reproduction d'images dans des publications imprimées ou en ligne ainsi que sur des canaux de médias sociaux ou des sites web n'est autorisée qu'avec l'accord préalable des détenteurs des droits. En savoir plus

**Terms of use**
The ETH Library is the provider of the digitised journals. It does not own any copyrights to the journals and is not responsible for their content. The rights usually lie with the publishers or the external rights holders. Publishing images in print and online publications, as well as on social media channels or websites, is only permitted with the prior consent of the rights holders. Find out more

**Download PDF:** 21.10.2025

**ETH-Bibliothek Zürich, E-Periodica, https://www.e-periodica.ch**

# Experimental and Analytical Investigation of Sandwich Panels

**Vladimir SIGMUND**
Professor
University of Osijek
Osijek, Croatia

Vladimir Sigmund, born 1956, received his BCE and M.Sc. at the University of Zagreb and Ph. D. at the University of Sarajevo. Teaches Continuum mechanics at the University of Osijek

**Kresimir HERMAN**
Professor
University of Zagreb
Zagreb, Croatia

Kresimir Herman, born 1934, received his BCE, M.Sc. and Ph. D. at the University of Zagreb where he teaches Theory of elastivity and Continuum mechanics.

**Darko SIGMUND**
Architect
"Sigmund" Ltd
Zagreb, Croatia

Darko Sigmund, born 1949, received his BCE and M.Sc. at the University of Zagreb. He is a specialist for modular coordination and rationalisation in design and building.

## Summary

In order to optimize outer wall's thickness and to reduce the required construction phases (costs) carrying walls built as "sandwich" panels (insulated wall panels) seem to be a reasonable alternative. Finished wall consists of inside insulation and two concrete wythes connected by shear connectors. It acts as composite wall up to a certain point. Load carrying ability of such elements is investigated experimentally and analytically. The experimental investigation consisted of trial loadings of model "sandwich" bords, up to the failure, under vertical, horizontal and in plane loading. The obtained results are compared with modified (based on the tests) analytical values for uniform concrete sections. Analytical values correlated well with the experimental results. Based on the results and published test results of the simmilar structures, suggestions for design of load carrying composite "sandwich" wall panels are given.

**Keywords:** "sandwich" wall, composite action, trial loading, shear transfer, analysis, design

## 1. Introduction

Insulated wall ("sandwich") panels are used in the TVD process that suits any architectural shapes and standards of buildings. The basic building elements are „TVD thermo- panels" which consist of a prefabricated steel frame (made out of two spaced inter-connected mesh reinforcements) and the insulation in-between, dry-set and completed „in-situ" with spraying of concrete, thus forming a purely monolithic structure with uniform concrete walls and slabs.

Mesh reinforcement is standardized steel fabric. Patented shear panel connectors (deformed stainless steel reinforcement bars) together with polyethylene tiles meshes and thermal insulation and form a space truss system for a panel board. Thermal insulation, held in place with the space truss, serves as a caisson for spraying of concrete and eliminates the need of formworks. It gives its physical characteristics to the finished wall, stiffens the lattice and serves as a horizontal or vertical support for spraying of concrete. Thermo panel boards (Fig. 1) are 0.60 to 1.20 meter wide and 2.60 to 4 meters high, so that one single person can easily handle them. They are easy to manipulate and any architectural shape can be achieved. The building phases for a story are (1) Erecting and assembling of thermo-panels and cutting out of the openings; (2) Setting up the plumbing and electrical installations on the panels; (3) The first spraying with concrete; (4) Assembling of the ceiling and

pouring of the slab concrete; (5) The second final spraying with concrete and surface finishing. Concrete wythes are the loads bearing part of the "sandwich" walls. Thickness of the finished insulated walls varies depending on its use (bearing and non-bearing outer- and inner-walls, slabs and base plate). From the structural standpoint, the walls are acting as composite walls consisting of insulation between the two concrete wythes of equal or unequal stiffness. The possible wall loading types are axial vertical loading, eccentrical vertical loading, in-plane shear load and wind lateral loading. As behavior of the composite panels and their carrying abilities are not standardized, each of the typical loading situations was simulated on model panels up to the failure and the panel behavior was observed.

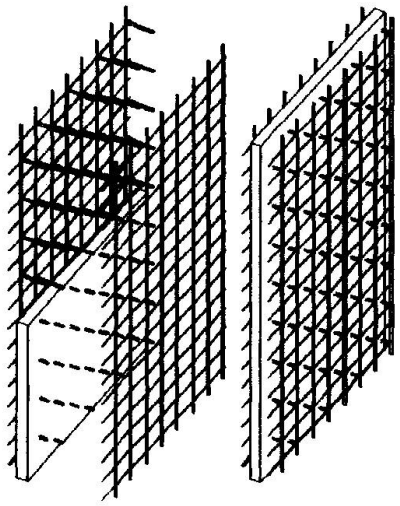

*Figure 1 TVD thermo-panel board*

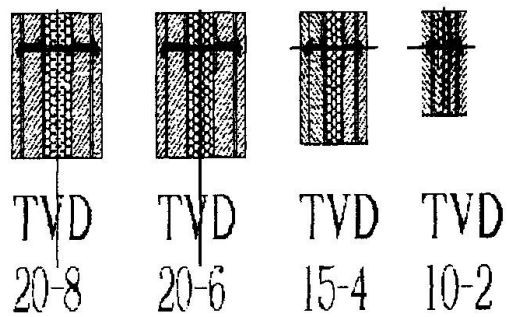


*Figure 2 Typical cross-section of the wall*

## 2. Experimental tests and analytical calculations

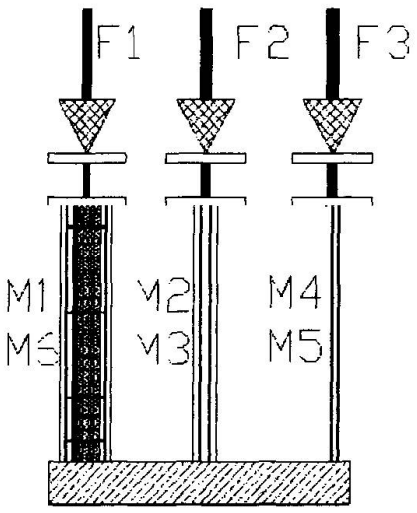


*Figure 3 Tested models of short walls*

Experimental tests were needed to study achieved composite action and behavior of the "sandwich" walls under various loading situations. The tests were divided in:

(A) Tests of short walls under axial loading. The models represented composite wall, one concrete wythe and uniform concrete section represented joined both wythes;

(B) Tests of composite "sandwich" panels which represent long walls, under axial load and moment, lateral and in plane loading.

The experimental investigation consisted of trial loadings up to the failure for vertical (composite and uniform concrete sections), horizontal and in plane loading. Results obtained from the tests on "sandwich" wall panels are compared with modified analytical values for uniform concrete sections.

Modifications of analytical formulas were based on the results of experiments and published tests of the similar structural systems. Measured and analytical values, calculated by the suggested, methods are correlated and it can be seen that suggested modified formulas are representing well the actual behavior. Calculated values are always on the safe side, except in the highly plastic region. Due to the special problems occurring in composite elements at the load application region, standard values of the safety coefficients have to be increased. The investigation has shown that insulated ("sandwich") walls executed in-situ by spraying concrete, can be analyzed with the modified methods that are commonly used for design of uniform reinforced/concrete sections.