Zeitschrift: IABSE reports = Rapports AIPC = IVBH Berichte

Band: 80 (1999)

Rubrik: Session 3: Loading, load factors and design techniques. Part 1

Nutzungsbedingungen

Die ETH-Bibliothek ist die Anbieterin der digitalisierten Zeitschriften auf E-Periodica. Sie besitzt keine Urheberrechte an den Zeitschriften und ist nicht verantwortlich für deren Inhalte. Die Rechte liegen in der Regel bei den Herausgebern beziehungsweise den externen Rechteinhabern. Das Veröffentlichen von Bildern in Print- und Online-Publikationen sowie auf Social Media-Kanälen oder Webseiten ist nur mit vorheriger Genehmigung der Rechteinhaber erlaubt. Mehr erfahren

Conditions d'utilisation

L'ETH Library est le fournisseur des revues numérisées. Elle ne détient aucun droit d'auteur sur les revues et n'est pas responsable de leur contenu. En règle générale, les droits sont détenus par les éditeurs ou les détenteurs de droits externes. La reproduction d'images dans des publications imprimées ou en ligne ainsi que sur des canaux de médias sociaux ou des sites web n'est autorisée qu'avec l'accord préalable des détenteurs des droits. En savoir plus

Terms of use

The ETH Library is the provider of the digitised journals. It does not own any copyrights to the journals and is not responsible for their content. The rights usually lie with the publishers or the external rights holders. Publishing images in print and online publications, as well as on social media channels or websites, is only permitted with the prior consent of the rights holders. Find out more

Download PDF: 18.10.2025

ETH-Bibliothek Zürich, E-Periodica, https://www.e-periodica.ch

Session - 3

Loading, Load Factors and Design Techniques (Part - 1)

Leere Seite
Blank page
Page vide

'PYLON FOUNDATIONS OF FOUR CABLESTAY BRIDGES
THE INDIAN EXPERIENCE'

TIPPUR NARAYANARAO SUBBA RAO
Chairman
Construma Consultancy Pvt. Ltd.
, Bombay
India

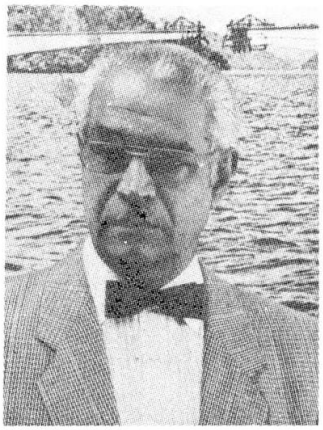

T. N. SUBBA RAO born 1928, Graduate : Univ. of Mysore, Hon. Doctorate : Univ. of Stuttgart, Fellow : Indian National Academy of Engineering; Past Vice-President : FIP & IABSE; Past President : Federation Asian & Western Pacific Contractors Assn; Managing Director (Retd.): Gammon India Ltd., Premier Design & Construction firm; Presently Chairman : Construma Group, Consultancy firm for Civil Engineering Works.

Summary :

The Paper deals with the piers and foundations of four cable stay bridges, each of which are significantly different in concept and execution. Two of the bridges have been executed. One has been executed with the described concept but for a different structural layout and the fourth one is about to be taken up. The kind of problems met with or expected to be met with, are dealt with in some detail. The major project executed, namely the Hooghly River Bridge in Calcutta has been given more attention because of the large span and complexity of the foundations in alluvial soil. The subjects chosen bring out the fact that the foundations for cable stay bridges require indepth attention because of the critical interacting behaviour between the foundation and superstructure system.

Introduction :

The adoption of cable stayed bridges for long spans, generally exceeding 200 m, demands a careful assessment of the characteristics of the soil under the foundations, more rigorously than is normally practised for other types of structures. The reason for this detailed investigation is essentially to ensure that the soil through which the foundations are taken down, as well as characteristics of the soil at founding level, are such that under load, settlement, tilts and shifts of the foundation, the stresses are within acceptable limits and sufficient lateral stability can be realised. It is evident that occuring of a slight tilt or movement of the foundation under a pylon pier could lead to a substantial and undesirable redistribution of forces in the superstructure. The sensitivity of the structure to the foundation behaviour, is therefore an aspect which cannot be overlooked from the stand point of choosing the parameters for foundation design, and the type of foundation most suited for the location. This observation also applies, though not as intensely, but nevertheless without loss of importance, to the design of the piers supporting the superstructure at either end of a cable stay unit.

The several types of solutions adopted for structuring a cable stayed decking, naturally results in the forces on the end piers and the intermediate pylons being somewhat different in terms of the quantum of the force distribution for the same deck module. Depending on the ground configuration, the transverse and longitudinal forces could be transferred by option, and to the

extent desired, either through the pylons or through the end piers, as convenient. The gravitational loads of the structure are by and large transferred to the foundations through the pylons and this constitutes a large percentage of the total force on the pylon foundations.

1.0 SECOND HOOGLY BRIDGE :

1.1 General Features :

The foundations and the piers of the Second Hooghly Bridge in India with a main span of 457 M and side spans of 182 M are most unusual and envelope conceptualisation of several types of complex foundations met with in practice. The (Figs.1&2) illustrate the general layout of the bridge and of the piers and foundations in some detail.

The structural system of the deck consists of portal type pylons with a through deck, with provision of restraint bearings in the longitudinal direction over pier 1 and free movement bearings at pier 4. The composite deck is transversely supported over these piers through the provision of lateral bearings.

The bridge is close to the sea and apart from the substantial range between low and high water levels, the standing wave from the tidal bores sweeping up the Hooghly quite often measure upto 2.5 M in height and need careful reckoning.

The bridge is located in a seismic area and is designed for a seismic intensity of G/15

The area being prone to cyclonic storms, wind force corresponding to wind speeds of about 200 Km per hour are to be expected.
The main pylon foundations 2 & 3 are also designed for the impact of floating vessels of 10,000 tons displacement with an approach velocity of 1.5 Knots per hour.

1.2 Choice of Caisson Geometry and Sinking :

Considering these factors and the Gangetic terrain conditions of the soil, the type of foundations chosen under the pylons consisted of two circular caissons each having 9 compartments, interconnected by a very rigid pier, to provide an effective transverse portal system. The top of the caisson is kept just above the lowest water level but piers extend nearly 12.4 M above this level.

The cellular caisson layout is dictated by that of the pier, which is also cellular. The forces from the pier are transferred directly into the inner walls of the caisson parallel to the pier, and the forces thus transmitted, are carried through these walls over the entire plan area of the caisson, almost immediately below the base of the pier. The internal layout of the caisson walls give the caisson a very rigid structural system; the force transfer path to the soil is shortest as also concentric to the caisson. The transverse portal action is complete and effective and provides in that direction a high level of security against the action of transverse forces, impact from floating vessels, forces generated due to presumed differential settlement of the twin caissons below each pier and the like.

The caissons have been designed to be empty throughout their working life in order to reduce pressures on the soil. The Gangetic soil has clay bands interspersed with coarse and fine sand layers and thus invites settlement threat over the years. Since the strata is sedimented uniformly and characteristic over a wide flood plain, the likelihood of

differential settlement between the caissons is remote and should any such phenomenon manifest itself, the transverse monolithic behaviour of the caisson plus pier system would counter it by seeking a new equilibrium status.

In the longitudinal direction, the forces transferred from the pylon act on the total pier caisson system as a free cantilever, with the force on each base under the twin legs of the pylon being somewhat different, especially under seismic and wind load conditions. The stability of the system is checked as a rigid mass founded on an elastic soil.

The settlement of the caisson pair is evaluated taking the specific alternative bands of sand and clay layers into account. The settlement of both the pylon piers 2 and 3 are not expected to be substantially different and therefore the structure is unlikely to be geometrically disoriented. The section of the caisson in plan, is checked for the non-uniform soil pressure distribution around it under various resultant loading conditions, and has been accordingly reinforced.

The twin caissons 2 being located alongside the bank, are sunk from a dry platform formed with the help of steel sheet piles, whereas the pair of caissons 3 has a double walled steel shell prefabricated in a dry dock. The shell 3 was slipped at high tide into the river, brought to location, filled with tremmie concrete to settle on a pre-formed flat river bed, and progressively sunk through the soil by open grabbing inside the cellular spaces in a systematic pre-ordained manner. A very close watch was maintained to account for the possibility of sudden scour below the shell occuring as a result of tidal and river current forces. The caissons were floated one after the other and the downstream one was placed in position after the upstream one had gone sufficiently deep, so that the possibility of suction of the soil from one caisson to the other was minimised. Once both the caissons were placed in position, they were taken down systematically with a level difference not exceeding 4 to 5 M, until they reached their final depth,

1.3 Caisson Plug and Cover Slab :

After reaching the final level, the twin caissons 2 were plugged with prepacked concrete and caissons 3 were plugged with tremmie concrete, as a first stage operation. The difference in the plugging method adopted was essentially to check the performance of the two methods. Both proved effective.

To avoid the possibility of seepage of water from the conical interface of the plug and the caisson shell, the caissons were dewatered after plugging and pier construction, and a reinforced concrete slab notched into the caisson walls, scaled each cell of the caissons. At the same time, the first stage plug was checked, qualitywise and water tightnesswise. The safety against buoyancy under this equilibrium state was 1.25. The plug in each caisson is checked for the reactive forces coming from the soil for the buoyant weight of the caisson including partial pier weight, before the reinforced concrete slab is concreted over it to form an integral part of this plug. Under service load conditions, on completion of the bridge, the integrated plug is checked for the highest reactive forces from the soil caused by the most severe loading combinations. These forces are transmitted by the plug to the inner and outer walls of the caisson and the bottom-most section of the peripheral wall has been reinforced for the bursting and bending forces coming on it. A finite element analysis for both the first stage plug and the integrated plug generally indicated good dome action and effective transfer of forces from the caisson to the soil. The plugging being a very critical activity, had to be performed with much care and pre-planning, so

that the plug and the caisson behaved as if they were an integrated structural unit, capable of withstanding and transmitting to the soil in the most appropriate manner, the very large forces imposed by the structural system. The cells in the pier are interconnected by an opening above the plug level, to facilitate access and inspection.

The slab capping the caissons at near low est water level is rigid enough to energise the entire section of the caisson almost immediately below the soffit level. For concreting the cap and pier, caissons 2 were garlanded by a sheet pile cofferdam on the river side and posed no problem. However, for concreting the cap, the caissons 3 located midstream were provided with a circular steel cofferdam reaching above high water level and 7.5 M high. It incorporates a gate mechanism along the transverse axis, (Fig, 2) as an expedient for pier construction..

1.4 Some Factors Affecting Caisson Sinking :

Great care had to be taken during the sinking of caissons to see that they are sunk almost vertically in their true position. This is to avoid eccentricity of the pier over the cellular walls of the caisson beyond accepted limits, and also to ensure that the pylon is located directly over the central pocket of the caissons.

A shift of ½% (2.25m) of the central span inbetween the caisson pair 2 and 3, with corresponding span variation was acceptable and designed for. However, careful sequential sinking and precautionary measures like maintaining the water level inside the caissons higher than the river level with a view to prevent sand blows during sinking and others, helped in reaching a main span variation of less than 1 M and transverse axis variation of less than 0.7% of the caisson diameter. The latter control ensured that the pier walls rested directly on the corresponding cellular walls of the caissons to enable the flow of forces effectively from the pier to the caissons.

To meet any accidental sand blow conditions during sinking, the caisson was designed for external earth pressure acting on half the diameter on the caisson, with consequent bending effect on the caisson in plan. The vertical steel was also checked for a sudden de-pressurised condition that may develop upto half diameter above the cutting edge of the caisson during the final sinking process. (fig. 1)

The caisson being massive, exhibited least sensitivity to movement and so long as the grabbing inside was systematically executed, sunk slowly without causing much anxiety.

In view of the depth at which the caissons are founded below high water level, the need for pneumatic sinking, should the sinking be obstructed by sunken boats or logs or other material in its path, was anticipated. The steel in the caisson is catered for this emergency so long as it occurred within a depth of 35 M. However, if such a case arose beyond this limit, the solution lay only by sending divers to cut the material underwater and remove it, which would have been a slow process but nevertheless imperative. Luckily, except for a 5 ton anchor left behind by ships, which came up during the grabbing operations, no other problem was faced. This contingency should nevertheless be anticipated and provided for in the design.

A garland of fenders for absorbing the impact of floating vessels is fixed on pier 3 only since the draft at pier 2 will not normally allow vessels to come close to it. Nevertheless, provision is made to fix fenders at this pier as well should a change in river behaviour

necessitate this. This has enabled the real force on the pier itself to be brought to a manageable level.

1.5 Piers 2 and 3:

The execution of the piers, starting below the water level and above the concreted cap required as a pre-requisite, definition of the exact location of the caissons in relation to their designed position and thereafter adjustment of the transverse axis of the pier in the direction of the span, so that the continuity between the transverse walls of the caisson pair and of the piers was realised within prescribed tolerance limits. Because of the presence of the aforestated sheet pile cofferdam, executing pier 2 posed no problem.

However, pier 3 required a very different treatment as no such cofferdam was feasible. The work on this pier starting below the water level, required it to be split into two parts. As first part, the pier and caisson cap portion within the cofferdam was constructed upto 9.0 M height (+ 7.0 M) of a total 14.0 M including the cap depth; This level was above high tide level experienced during the season. Provisions was made in the cap and pier to integrate balance portion of the pier between the caisson pair at a later date. The transverse reinforcement in this section is necessarily very heavy, due to portal action of the caissons plus pier, and demanded very meticulous layout and positioning.

The intermediate section of the pier was cast at 7.2 m level over a supporting platform suspended from a steel truss spanning between the piers already cast within the caissons. (Fig. 2) The lowering system was very carefully detailed so that control of any one of the 4 points of suspension was possible independently of each other. At either end of this intermediate section of the pier, a sealing arrangement was incorporated to prevent ingress of water from the soffit, when the section was lowered to its final position below water level. The lowering activity presented no problems since all contingencies were anticipated and provided for. Especially important was the exact positioning of the reinforcement along the pier axis, so that when lowered in position, it matched perfectly with the steel provided in the portion of the pier partly concreted over the caissons. This entire performance required design, detailing and construction management skills of the highest order.

Before lowering this precast pier section, the afore mentioned gates in the cofferdam were removed and this allowed water to food inside the cofferdam over the well cap. After the section was lowered, gates were inserted spanning the gap between the two halves of the piers on either side and this enabled dewatering the pier section between the gates. Much care was taken in detailing the junction between the gates and the soffit seal; It was a very vulnerable joint. The small leakage witnessed was sealed by divers with quick setting micro concrete during low tide. Following cleaning of the projecting reinforcement, the balance portion of the caisson cap and the piers upto + 7.0 m were concreted in the dry and thus the entire pier became integrated as one unit. The remaining portion of pier above

7.0 m was gradually raised upto its full height thereafter, in two meter lifts covering the entire plan area of the pier.

Of particular relevance is the concreting of the pier portion where the anchors for the base plate of the pylons are located. This required accurate positioning of the anchors with the

help of a template. The reinforcement in the anchor block was so detailed that it distributed the forces to the walls of the pier effectively through shear. The tension forces caused on the pierhead by the 3.5 degree transverse inclination of the pylon is countered by prestressing.

The meticulous planning and execution of the pier in two parts and integrating the central unit below water level, the positioning of the anchor plates and several other activities, required most careful attention to detailing to facilitate reinforcement placement, avoid unacceptable crack widths, ensure sufficient cover and concrete compaction for durability and other factors consistent to obtain a totally integrated pier and caisson system.

1.6 General Issues Concerning the Caissons :

The caissons were filled with water soon after the plug cap was laid and prior to the integration of the pier section, to enable major settlement of the foundation to take place. Following pier integration, the caissons were dewatered completely, the silt which had collected over the concrete plug was removed, the laitence though hard chipped out, the surface cleaned efficiently and the concrete slab referred to earlier laid over it. Thereafter, they were checked for any leakage of water and where it occurred though to a very small extent, was plugged by injecting cement or epoxy grout.

The caissons 2 and 3 were again filled with water, and progressively dewatered with superstructure load buildup and are designed to be **kept empty** throughout life. Under this condition as the caisson walls have to withstand large horizontal forces form the soil, a plane frame analysis of the caisson geometry in plan was carried out and the stress levels checked.

A periodic check is maintained as regards progressive settlement of the caissons and the scour around them. A SAP IV programme carried out for the main pier cum foundation system 2 and 3 for the severest lateral and vertical forces, indicated that the system behaved as a single bay portal frame with a hinged base and the effect of differential settlement of the order expected between the pair of caissons supporting each pier would be small. A gross settlement of 200 mm and relative settlement of 25 mm between the pair of caissons was part of this investigation.

1.7 Special Design and Conceptual Issues

Briefly, they are :

- The assessment of risk factors arising out of the choice of soil parameters and the force levels due to seismic, wind and river current.

- The structural system best suited for absorbing both the very large longitudinal and transverse forces, inherent with large spans.

- The type of foundations to be adopted for the pylons, so that they suffered to a minimum extent due to settlement, without sacrificing integrity of their behaviour and performance.

- The need to keep the caissons dry to reduce foundation pressure and consequently stipulation of a crack free design for the outer walls of the caisson.

- The methodology for integraing bottom section of pier 3 below water level keeping risks and durability factors in mind,

- The possibility of scour occurring during construction and causing the caissons to be shifted from their true positions.

These issues highlight the innovative approach and the close interaction required between the design and construction teams responsible for the execution of the foundations.

2. AKKAR BRIDGE :

The bridge over River Rangeet at Akkar in India has a central pylon with a span of 79 M on either side. The pylon and the deck are all constructed in concrete. (Fig. 3).

The pylon is located on a single circular caisson sunk through rock by using controlled blasting techniques. The caisson is shielded against blasting shocks with steel upto a height of 4.15 M on the outside and 7.70 M inside the dredge hole. The concrete pylon rests on wedge shaped hollow pier just above the high flood level. The nosing of the pier on the upstream side is shielded by armour-plates to protect it from the impact of huge boulders rolling down the fast flowing river during high floods. The pier is founded on a thin slab capping the caisson. (Fig. 3)

The wedge shape of the pier causes the load from the pylon legs to cause a splitting action at cap level. This is accounted for by closely spaced small dia. reinforcement. No prestressing is applied. As the well cap is too thin to help even redistribution of load from the pier over the caisson ring, heavy hoop reinforcement is provided in the caisson just below the cap, to counter the splitting action caused by the pier, as also to help gradual dispersion of the load into the steining; It is as if the pier sprouts from the steining as an integral part of the pier caisson system.

The deck is freely suspended from the pylon. Unlike the Hoogly Bridge both the transverse and longitudinal forces caused by wind and seismic action (G/10), temperature and braking effects are taken equally at both ends of the bridge, by an abutment block, interfaced by a multiple neoprene bearing arrangement. The vertical forces are carried by horizontally placed neoprene bearings and the abutment block itself provides counterweight in an emergency. The abutment is keyed into the foundation rock through shear keys.

The bridge site with steep banks and good foundation rock on either side is excellently suited for absorbing the deck forces in-plane and the abutments were designed to suit. The positioning of the neoprene bearings to absorb longitudinal forces, transverse forces, and downward loads together with provision for their inspection and replacement, constituted an important criteria while defining the layout and geometry of the abutment. Again, the geometry of the deck penetrating into the abutment was such as to provide access to the back-stay cables, which may require restressing in future.

3. JOGIGHOPA BRIDGE :

This proposed (but not implemented) double deck rail-cum-road bridge for dual line broad gauge track across the Brahmaputra river in India has a cable stay span for a part of its

length, with spans of 138-348-138 M. The superstructure is designed to be of steel construction. (Fig. 4)

The solution for the caisson foundations of this cable stay module presented different problems because of the presence of slopping rock strata. As a result, one pylon and one anchor pier caisson foundation are founded in sand, approx. 65 M to 70 M below the bed, and do not pose difficult problems for sinking and plugging. The other pylon and anchor pier caisson foundation close to the bank have problems in founding, although not with regard to their initial sinking in the sandy river bed. The anchor pier also absorbs the longitudinal forces and it is located and anchored into rock 35 M below the lowest water level. The anchoring of this foundation into rock under pneumatic conditions, although hazardous at that level, can nevertheless be accomplished by a planned and systematic excavation of the rock. However, the same solution cannot be applied to the pylon foundation, which encounters the slopping rock approx. 45 M below the low water level and is thus beyond safe pneumatic sinking limits. Since the scour in the river extends upto this level, the need for effectively anchoring this foundation in rock is a vital necessity.

The layout for all the foundations consists of a Double D caisson. The piers are founded at water level on a stiff cap, which redistributes the forces to the caissons most effectively.

The caisson of 28 M dia. and with a twin dredge hole has pre-formed circular openings of 1.5 M diameter at 5 M centres within the steining of the caisson. These openings are filled with sand during the sinking process and once the caisson touches the rock level, the sand is washed out. To avoid tilt of the caisson during its final sinking process close to the rock strata, as also to prevent this occurring by the cutting edge touching the rock accidentally by sudden sinking in the last few meters of sinking left, the caisson is stopped short of the rock level. Divers are then sent to stabilise the caisson by providing chairs from below to support it. The soil at the founding level is thereafter cemented by injecting cement grout both inside the dredge hole and outside. Holes of 3" dia kept at 2m intervals in the steining close to the outerperiferi, with exit holes in the curb close to the cutting edge, effectively carryout this grouting operation. The compacted soil at the base further stabilises the caisson. This soil and the rock strata is then bored upto 3 m. through the 1.5 m dia openings and concreted upto the top to establish a good anchorage for the caisson. The stub piles are stressed vertically into the rock mass to establish a positive anchorage and help accept both over turning and shear at the rock level.

The next stage activity covers the cleaning of the dredge hole in the caisson, assisted by divers, followed by plugging with concrete under water upto three quarter the height of the final plug thickness. A central circular opening in the plug is maintained upto rock level during this first stage plugging operation. The caisson is dewatered after plugging, the referred opening is cleared of all silt, and the portion excavated and concreted upto a minimum depth of 1m in rock. This provides a good shear key to the system against sliding on the slopping rock and relieves the shear being felt by the piles. This central

concrete fill is carried above the plug to the full designed height of the plug and integrated with it with dowel bars.

The final outcome of this construction system is that the piles take vertical forces, the central key takes the shear and the vertical prestress aids the anchoring system. Some

variations to this system by way of providing a pier cap over the plug, or adopting other means to grout the soil at the founding level, etc. are indicated.

This concept has been successfully tried out on the circular caissons, supporting 120 m structural steel spans, finally adopted for this bridge.

4. BAGCHHAL BRIDGE:

This bridge designed to span across the river Sutlej in the back waters of Govindsagar Lake in Himachal Pradesh, has perforce to be designed as a cable stay bridge with an imperative main span of 184 m and side spans of 75.45 m, thus providing a total length of 234.9 m between abutments (Fig. 5).

The pylon is in concrete and is founded on open foundations in rock strata. The shape of the pylon appears elegant and is designed to reflect the hand clasped *'Namaskar'* concept cradling the concrete deck in between. The deck is 12m wide, carries a 7.5m dual lane carriageway for Class AA & 70R loading, flanked by 1.5m wide footpaths, with railing and crash barrier protection.

The cablestays supporting the deck are anchored in a pylon head above 32 m ht. along the central axis of the bridge. The A frame and the lower V frame in reverse are anchored to a cellular pier, having openings to allow ingress of water and prevent one sided water pressure. The reason for choosing the cellular pier lies in the fact that the transverse contour of the hill on either approach, has a steep fall and a A frame solution, though simplier, would have necessitated unequal legs of substantial height. The pier is founded on a footing which in turn rests on a 1:3:6 concrete foundation. (Fig. 6)

The bridge has a rise of 1.80 m across the main span and the curve is tangential at the pylon point with a straight approach to the abutments. The deck is integral with the pylon and the temperature effects are substantially absorbed by the arch effect and low stiffness of the deck in the main span. The expansion of the 75.45m length is accommodated at the abutment end. Since the pier and deck are integral, the design is complex but greatly improves the global behaviour and stability of the pylon. The pylon and deck are checked for accidental failure of one cable with designed load traffic and also for controlled one lane traffic during replacement of one cable. The pylons are designed to cater for the entire wind/seismic effects on the deck plus its own system behaviour. However, as a measure of caution, transverse and longitudinal forces are also designed to be absorbed to the extent of 35% at the abutments. The deflection of the pylon along the Longitudinal axis is also accounted for in the design of the expansion joints at the abutments.

Work on this project is slated to commence this year.

bridges causes the decision much more risk oriented. The very size of the foundations to carry all the loads of such large spans, again demands a much more detailed assessment of the forces coming on them and calls for computer aided finite element or simialr techniques, to assess the stresses coming on the critical components of the foundations. Careful detailing without sacrificing integration of the different components, consistent with the construction sequence adopted, is a cardinal requisite. This seeks pre-determination of the exact construction methods to be programmed, as well as a very close interaction for realising the scheme, right from concept to practical reality, among all concerned.

Credits :

Credits are due to Hooghly River Bridge Commissioners; M/s. Schlaich Bergermann und Partner, Germany; M/s. Freeman Fox Limited, U.K.; erstwhile colleagues at Gammon India Ltd., and Associates at Construma Consultancy Pvt. Ltd.

5.0 CONCLUSION :

The problems of foundaitons of cable stayed bridges are not unlike those met with in the design of other types of bridges. The cited foundation for Jogighopa bridge resting on sloping rock and beyond acceptable pneumatic sinking limits, would be the same were the bridge cable stayed or otherwise. However, the very large spans adopted for cable stayed

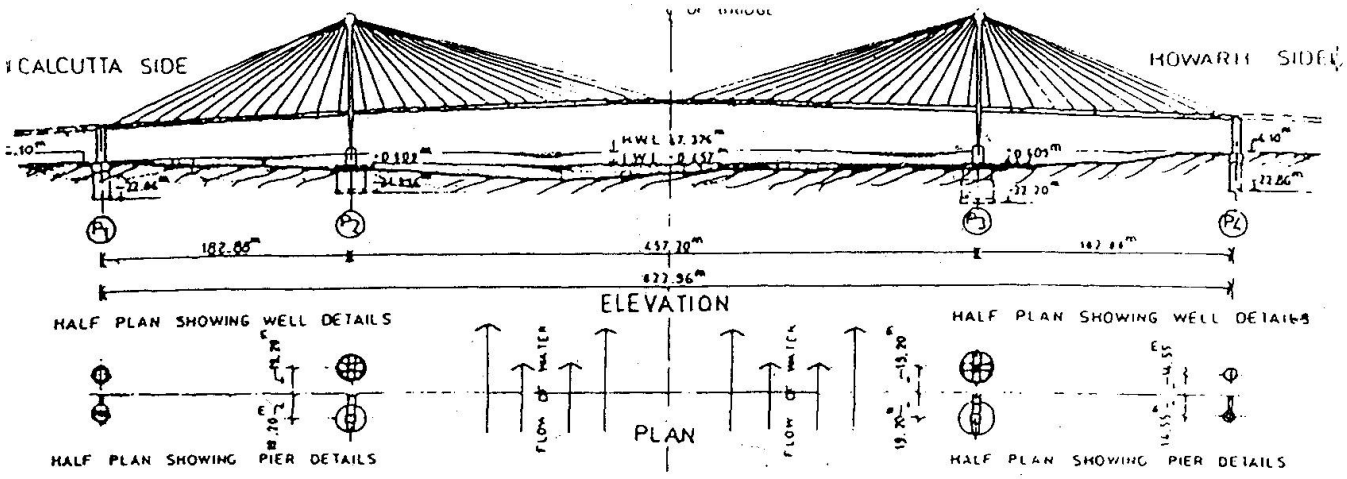

FIG. 1 GENERAL ARRANGEMENT

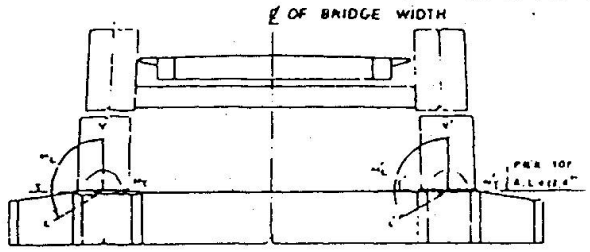

FIG. 2 DIRECTION OF LOADS FORCES AND MOMENTS AT THE PYLON BASE

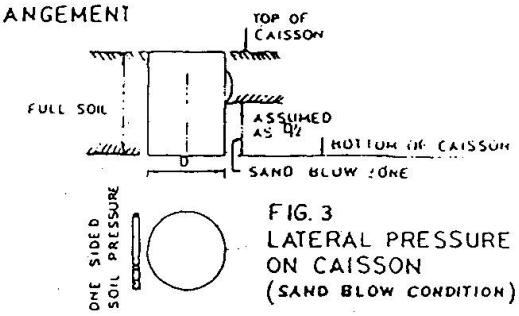

FIG. 3
LATERAL PRESSURE ON CAISSON
(SAND BLOW CONDITION)

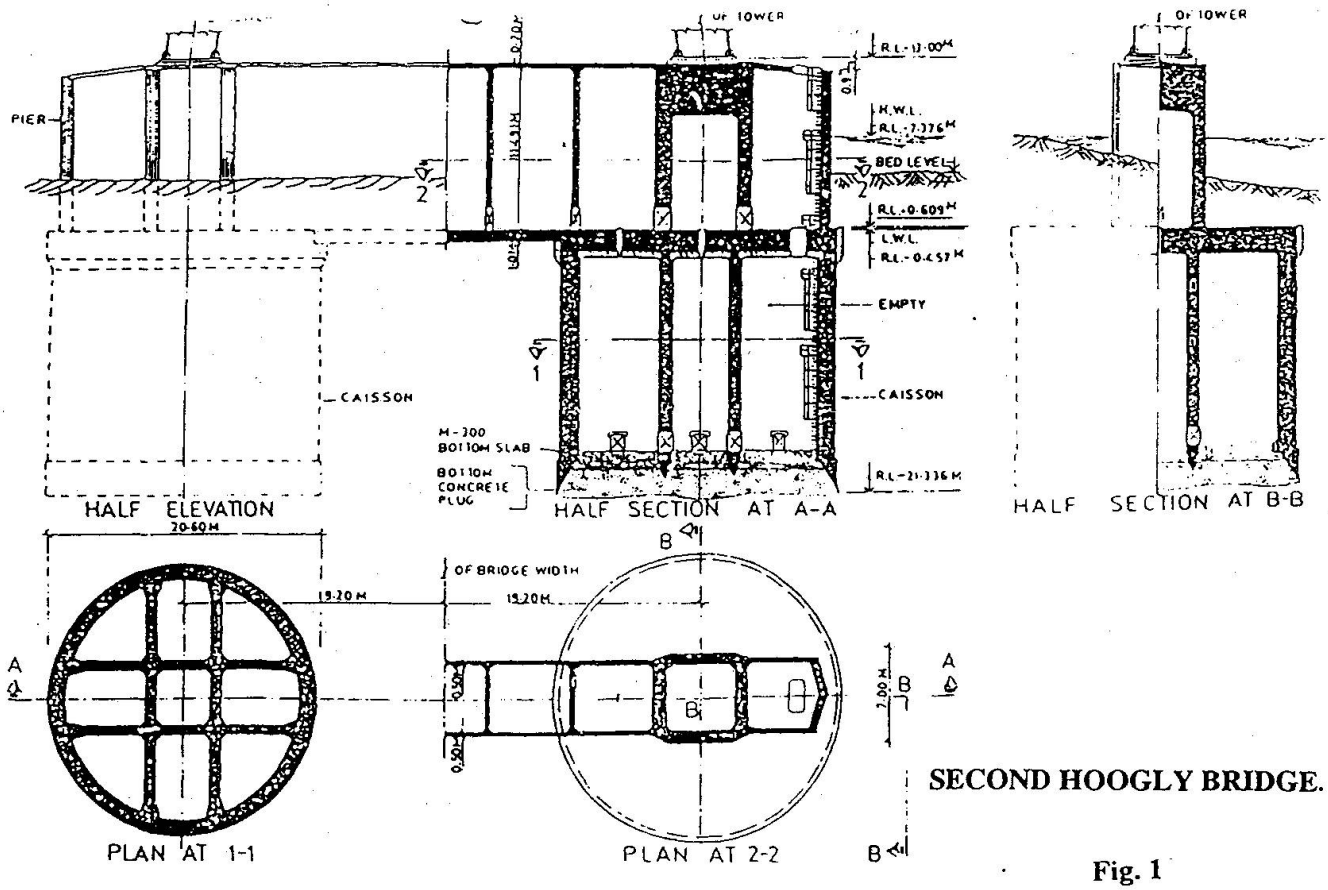

SECOND HOOGLY BRIDGE.

Fig. 1

PIER P 2 & CAISSONS F-2

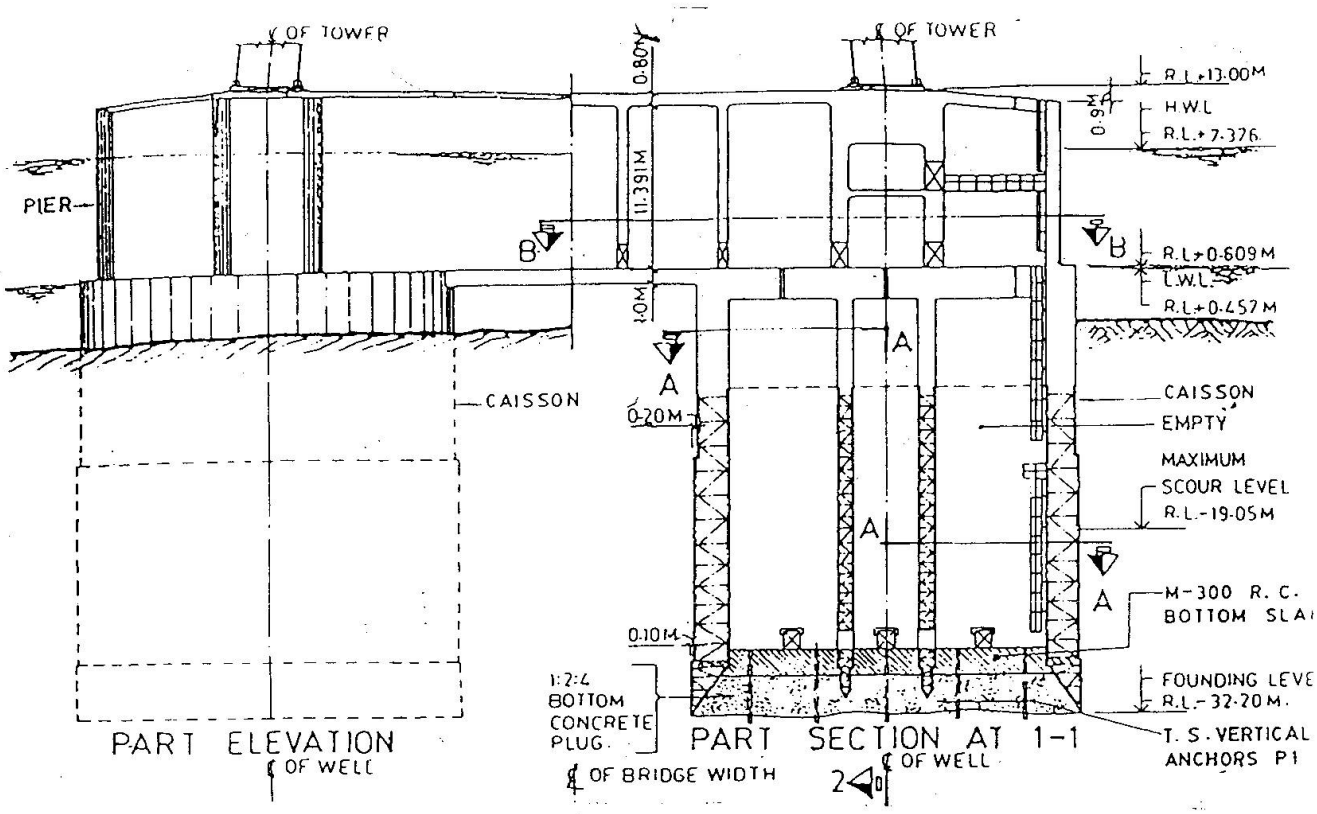

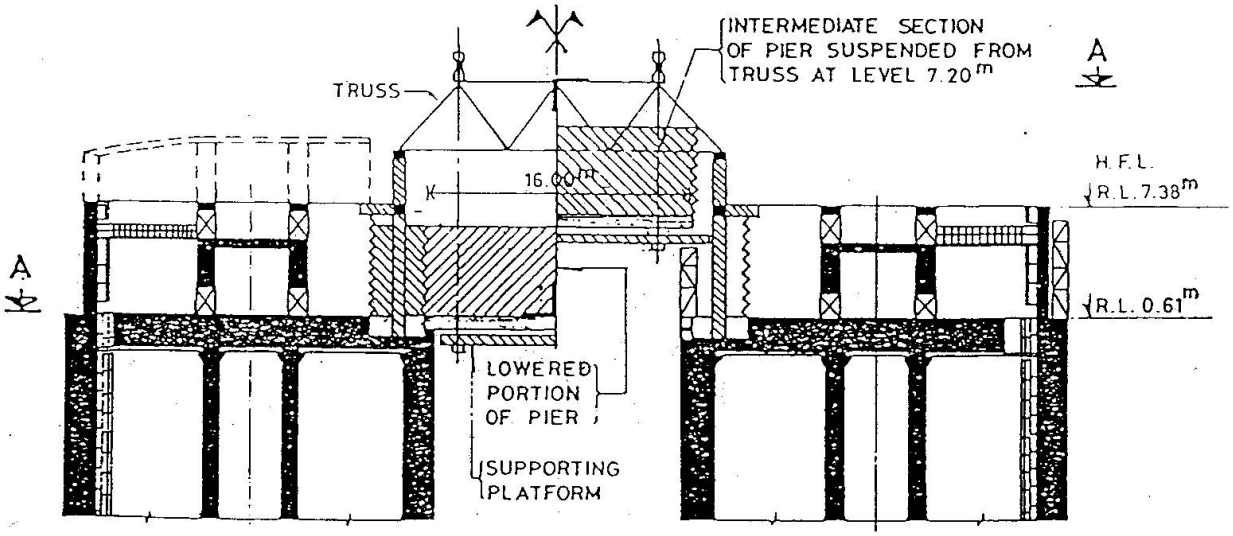

SECTION B - B **PIER P3 ℄ CAISSONS F-3**

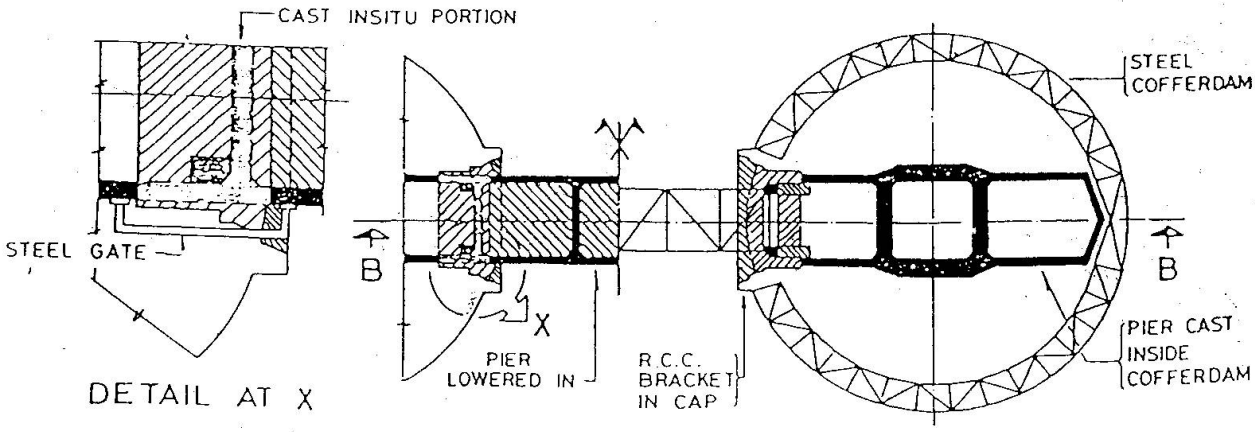

SECOND HOOGLY BRIDGE. Fig. 2

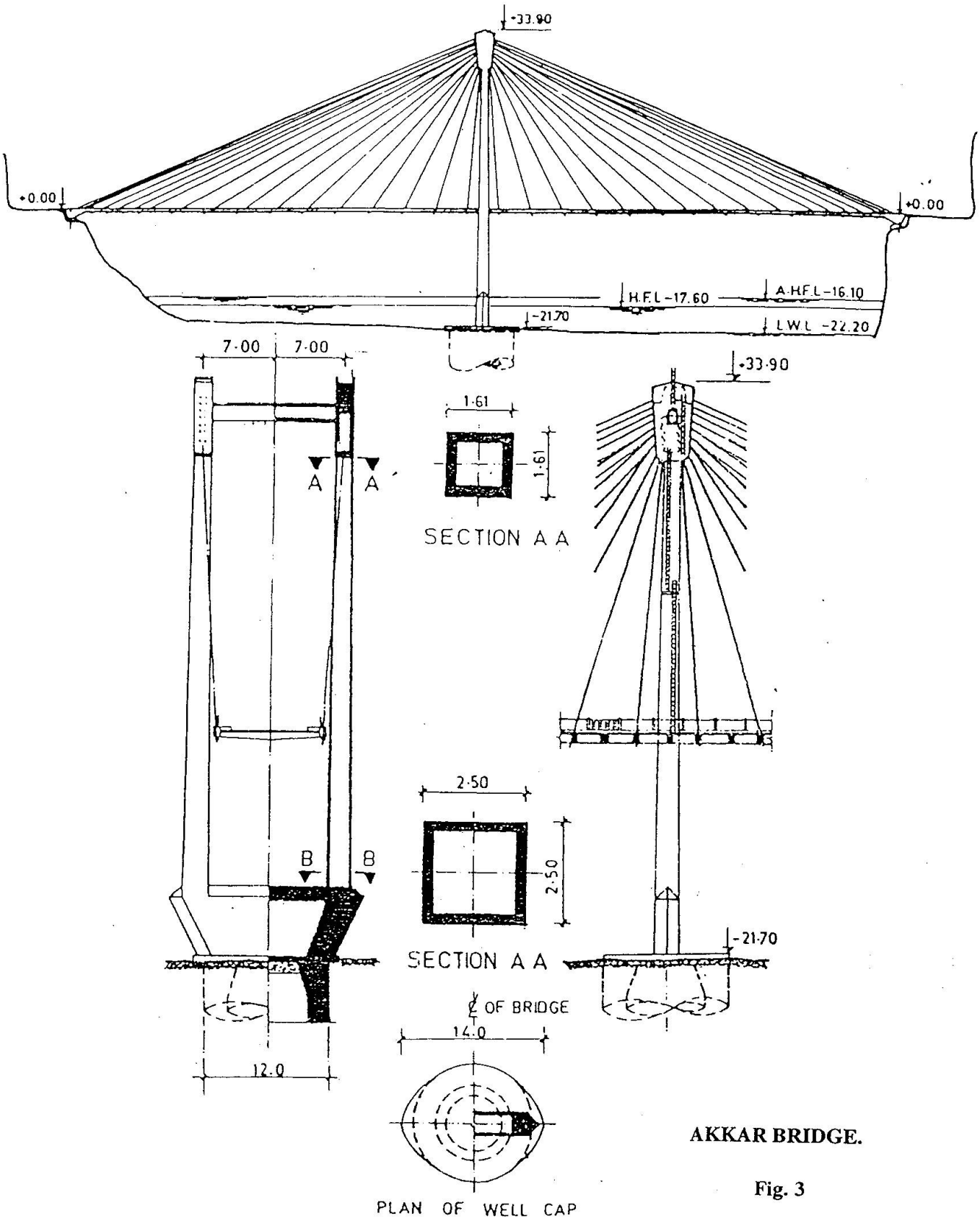

AKKAR BRIDGE.

Fig. 3

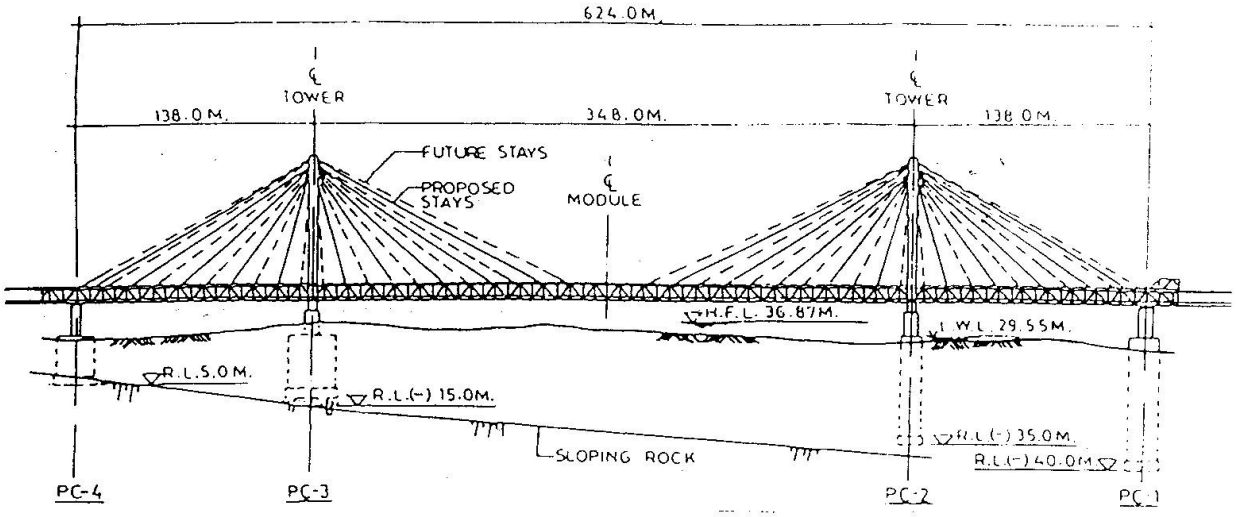

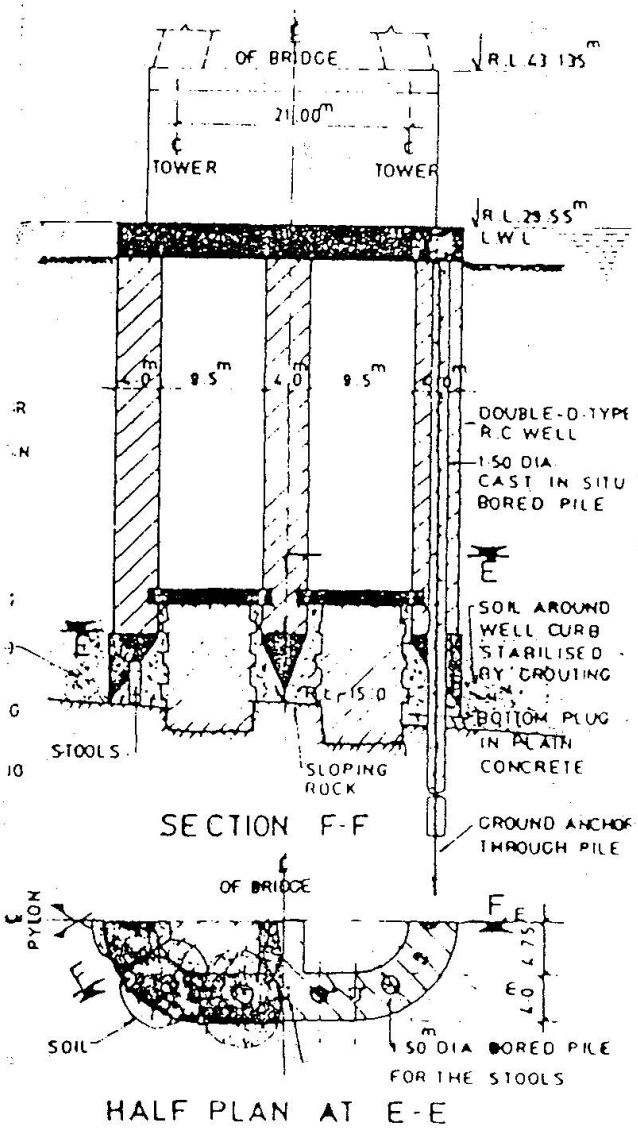

JOGIGOPA BRIDGE.

Fig. 4

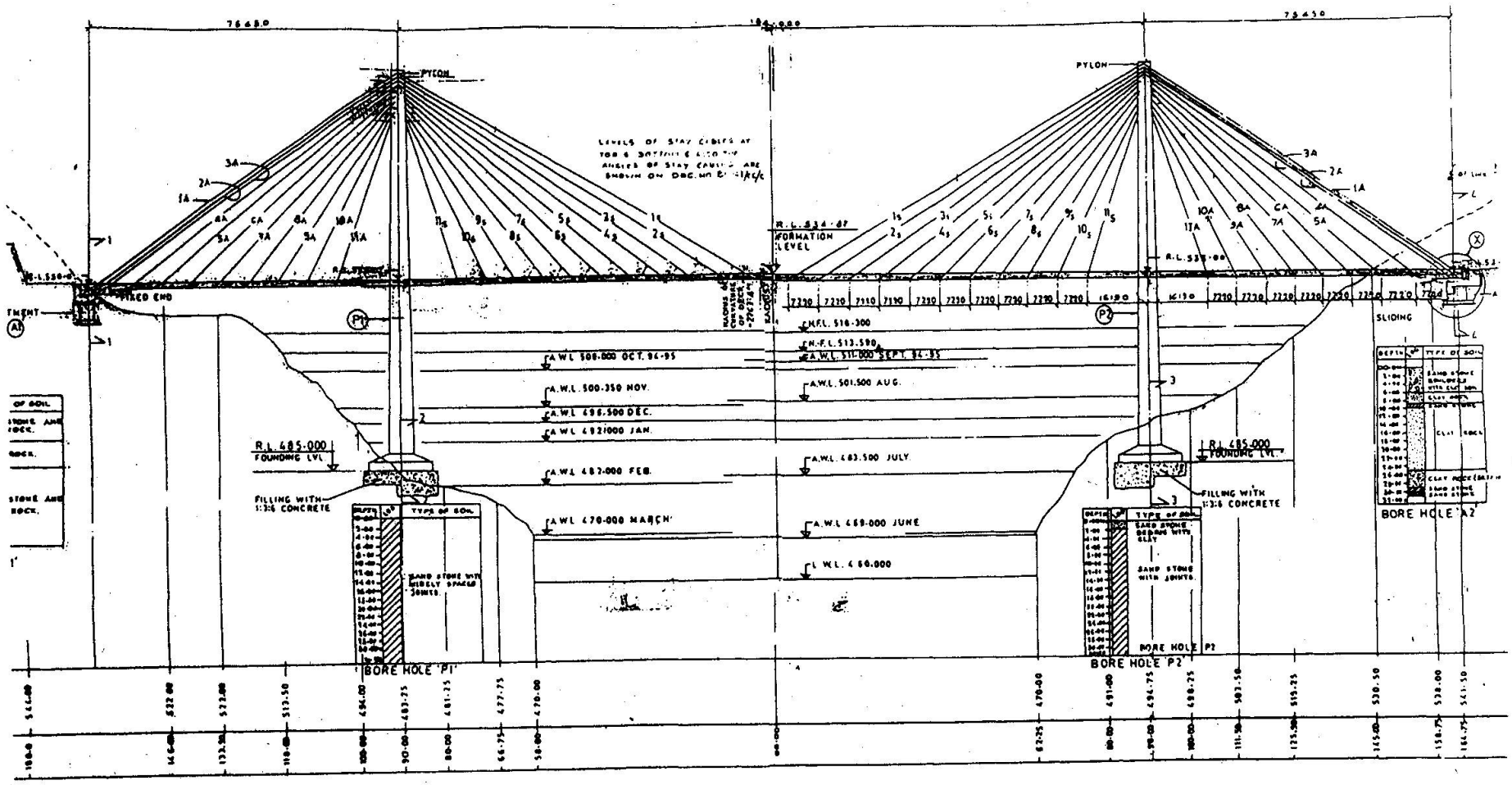

BAGCHHAL BRIDGE

Fig. 5

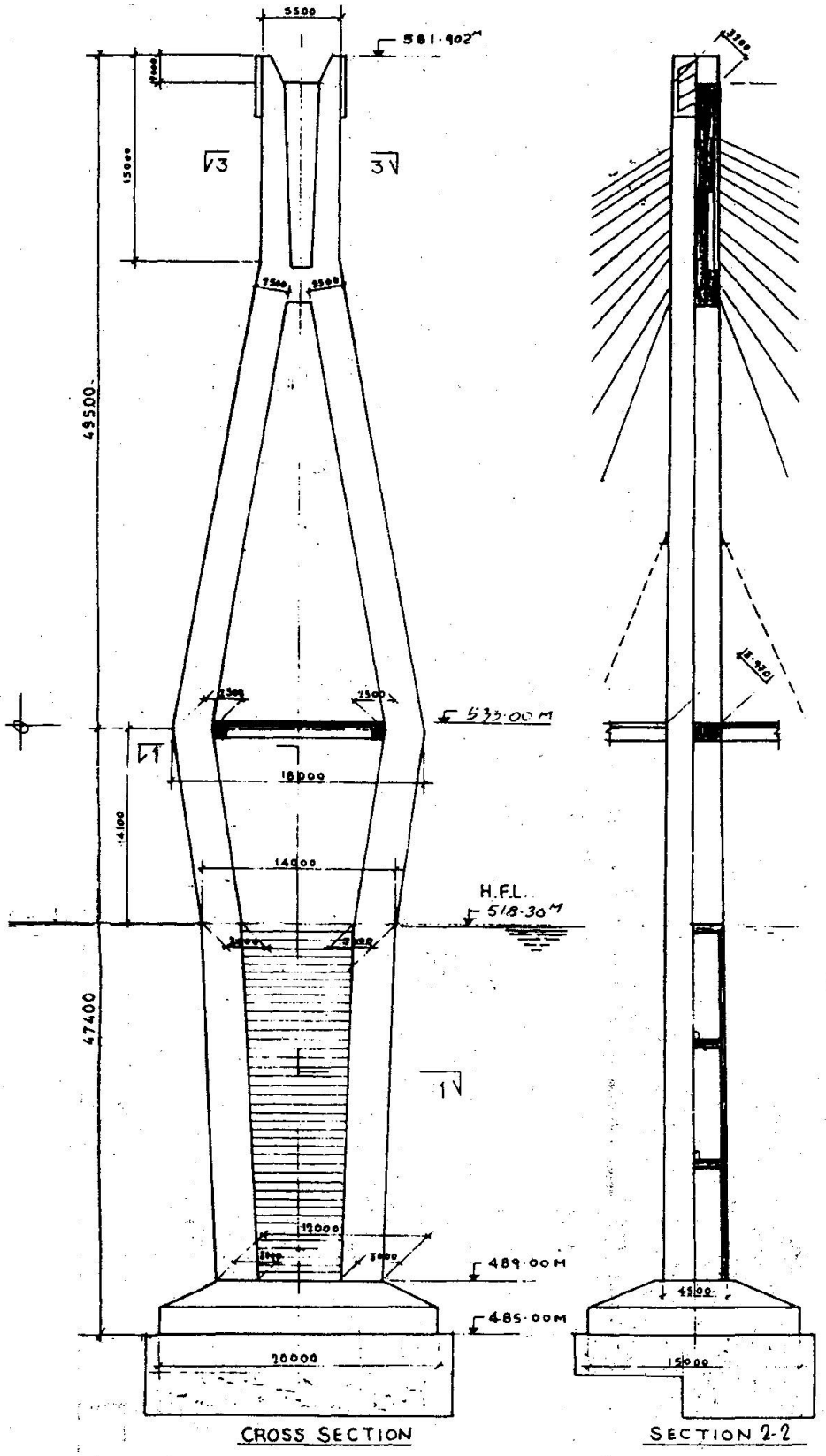

DETAILS OF PYLON

BAGCHHAL BRIDGE **Fig. 6**

The Test and Research on Design Method of Diaphragm Wall-type Foundation of Bridge

Li Tao
Senior engineer
Chief engineer
Xiamen Branch
The First Survey & Design Institute
Ministry of Railway
Xiamen, China

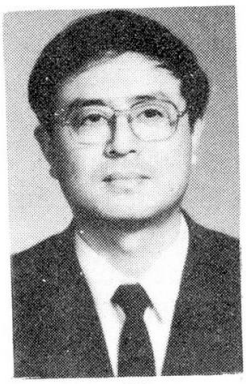

Li Tao

Li Tao, born in 1957, received a civil engineering degree from the South-Western Jiaotong University in 1982. He has designed a lot of bridges and now his research focuses on the foundation of bridge, the earthquake reaction of bridge, etc.

Jing Ren
Senior engineer
vice-Chief engineer
The Transport Planning Investigation and Design Institute of Gansu
Lanzhou, China

Jing Ren

Jing Ren, born in 1948, received a civil engineering degree from the Lanzhou railway College in 1982, He has designed a lot of bridges.

Summary

This paper discusses the field test and finite element analysis of the solid digging well foundation and the diaphragm wall-type foundation in scale 1:2 with same dimension. These foundations had been built in loess Q3. The results show that the vertical friction force and the horizontal resistance are not given by soil column inside the diaphragm wall-type foundation. The calculating model of hollow foundation had been established in the design of this foundation. This paper also introduces a practical case of the first diaphragm wall-type foundation of bridge in China.

1. Introduction

At present the underground Diaphragm Wall-type Foundation(DWF), which is a kind of rapidly developed foundation form, has been widely used to bridge structure in Japan. In comparison with the Solid Foundation(SF), DWF has better bearing capacity and stability because of its owing more base and outside surface area. In Japan, "The Guide of the Design and the Construction in Underground Diaphragm Wall Foundation" [1] pointed out that one portion of vertical friction force of internal soil body can be taken into account while designing.

The Baoji-zhongwei Railway, which was built in the Northwestern areas of China in the early nineties, was located in loess area. The underground DWF was put to use in design, and a model test research was carried out to serve the design.

2. Model Test

2.1 The General Information of Model Test

Two circular foundation models whose diameter is 2.5m, depth is 5m (the model scale is 1:2 with a practical bridge) are adopted. Concrete was poured into it after the foundation had been dug successfully on the spot. The steel earth-pressure celles which had been calibrated in advance were fully arranged on bottom of the model. Along with the height of the side wall, Φ150mm steel earth-pressure celles were disposed every 0.6m*(Fig.1)*. Tiltmeter and displacement transducer were installed on the top of the foundation so that the parameters such as displacement and rotation can be measured. The test spot was in Q3 collapse loess area and its physics-mechanics properties is listed in *table 1*.

Table 1. The Main Properties of Physics-mechanics in Q3 Loess

natural Density	natural water content	natural void-ratio	plastic limit	liquid limit	triaxial test		shear	compression coefficient	coefficient of collapsibility
P(g/cm³)	W(%)	e	Wp(%)	Wl(%)	C(Kpa)	Φ(°)		a(Mpa⁻¹)	(under the pressure Of 0.3Mpa)
1.48-1.50	15.5-18.0	1.101-1.142	17.6-19.5	27.9-30.1	16-56	17.7-20.5		0.435-0.725	0.064-0.104

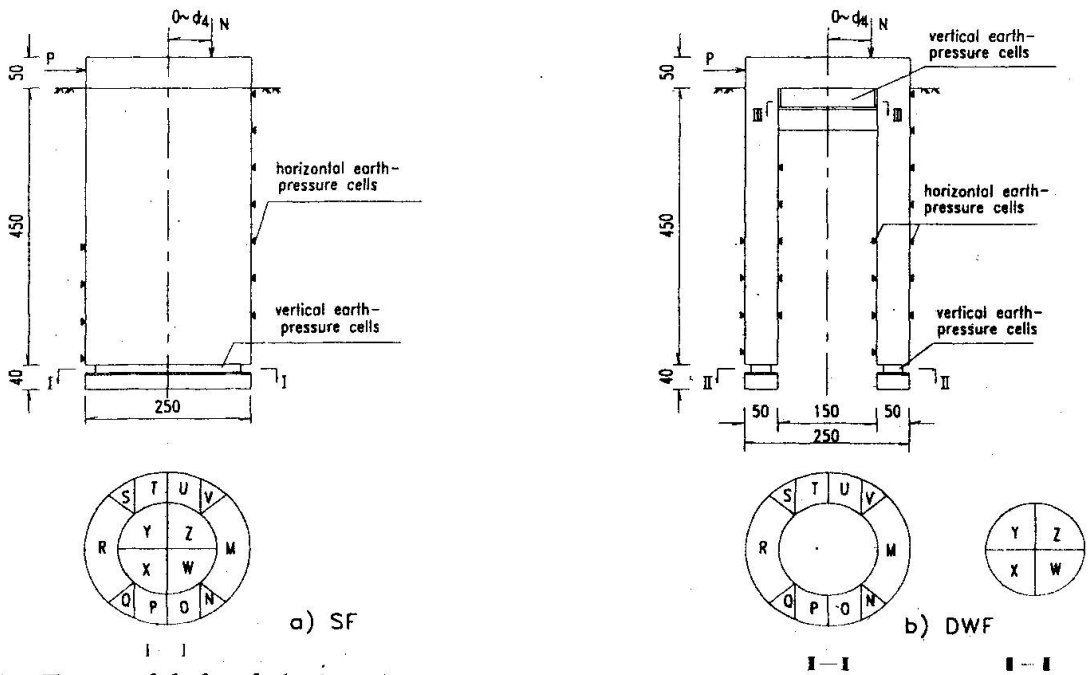

Fig.1 Test model sketch (unit:cm)

Loading equipment is composed of loading beam, anchor stake and two jacks of 3.0MN. First, vertical eccentric loading of the model is made (the distance of eccentricity is one fourth of base diameter) and the horizontal loading (from grade 10 of zero to 780KN.) are carried out after unloading.

2.2 Main Results of the Test

2.2.1 The Vertical Eccentric and Central Loading

(1) The limit load-bearing of SF is obviously greater than that of DWF as shown in *table 2*. Drawn from the N (load)-S (sinking displacement) curve, the displacement of DWF is greater than that of SF when the loads are same (see *Fig.2* and *Fig.3*).

(2) The resistance force at the foundation bottom increases when the load increasing. When the damage reached, the total resistance force for DWF in about 35% of the total loads and 42% for SF.

Table 2. The Limit Load-bearing of Two Foundations

type of foundation	vertical eccentric loading (MN)	vertical central loading (MN)
DWF	1.6	2.0
SF	2.4	2.8

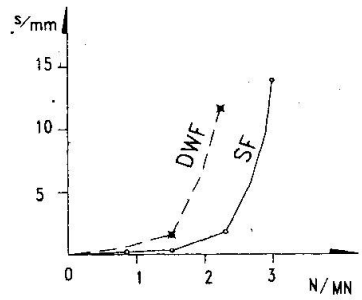

Fig.2 N-S curve for vertical eccentric loading

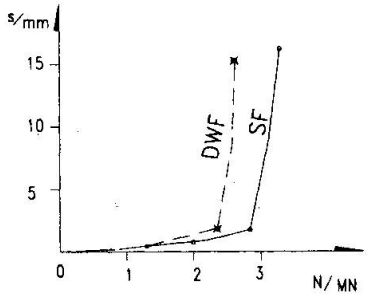

Fig.3 N-S curve for vertical central loading

(3) The bearing resistance of contact surface (area x,y,z,w) between the bottom of the top deck of the diaphragm wall and the top of soil column is small, which is only about 4% of the total ground resistance, while the vertical friction force of the two foundations is almost equal under the same loading condition.

(4) The pressure stress distributions of the two foundation bottoms are slant straight line when the load is small and it matches well with the theory of elasticity. When the load increases and the plastic behavior of the earth is obvious, the stress distribution occurs and shows "∽" curve. *(fig.4)*.

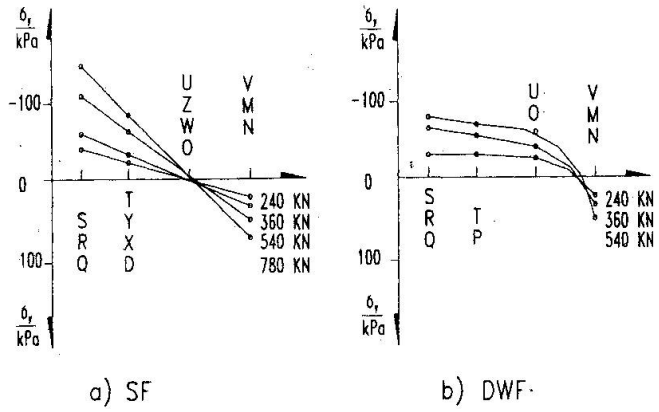

fig.4 The distribution of base stress under vertical eccentric loading

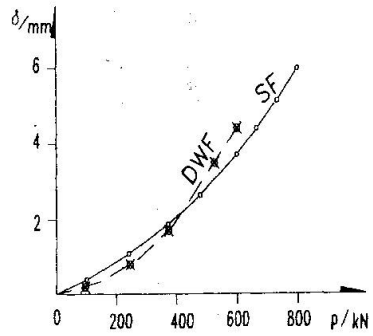

fig.5 P- δ curve when horizontal loading

2.2.2 Horizontal Loading

(1) From the P (load)- δ (horizontal displacement) curve (*fig 5*), we can see that the horizontal anti-push stiffness of DWF is similar to that of SF, which is different to some degree from the test results of diaphragm wall-type sinking well by the Japanese 饭坂. In this field test of the viaduct, the horizontal displacement of ordinary sinking well is four times as much as that of DWF. [2]

(2) The stress of the two foundations is pulling stress (*Fig 6*) and the foundation bottom turns around the front end of the bottom and tends to be up. The distribution and its value of horizontal earth pressure at the external wall of the two foundations is almost same(*fig 7*); but there is almost no earth pressure in the internal side wall of DWF.

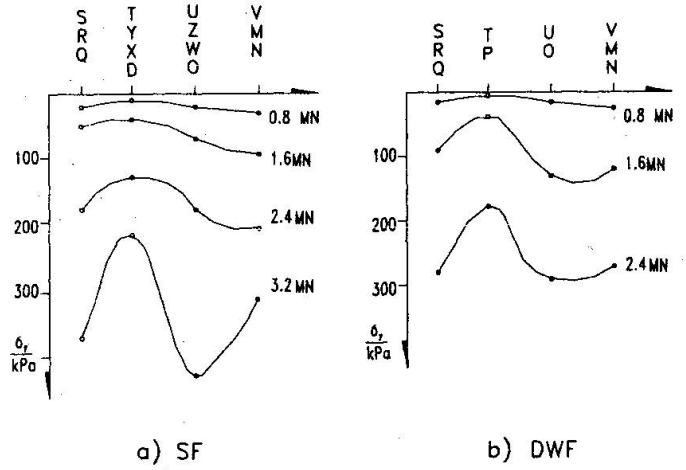

Fig.6 stress distribution of the foundation bottom when horizontal loading

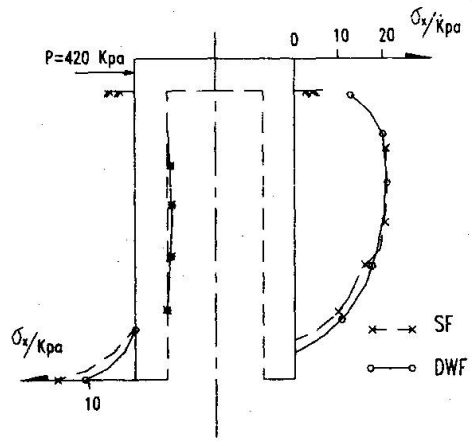

Fig.7 the distribution of horizontal earth pressure of side wall

3. Finite Element Analysis

By using a finite element program of calculation, the stress and deformation of the earth-foundation are calculated when the vertical load is 1.6MN and horizontal load is 420KN. In calculating, 400 three dimensional solid units with six surfaces are divided. The elastic modules E of the foundation concrete is 27×10^3 Mpa; the passion ratio v is 0.17; the elastic modules Es of the soil is 17 Mpa. The calculation model is shown is *Fig 8*.

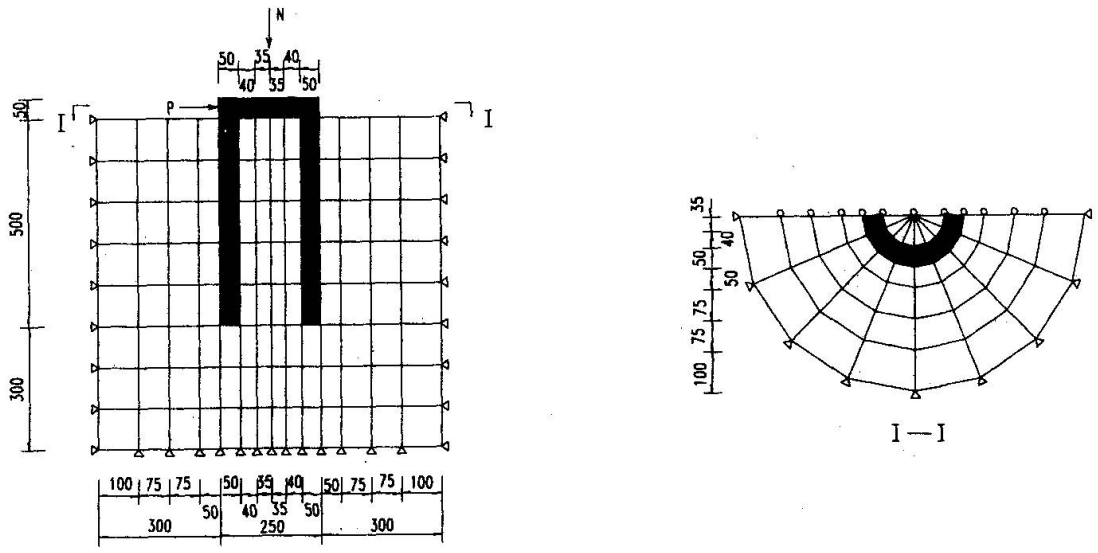

Fig. 8 finite element sketch(unit: cm)

3.1 Main Results of Calculation

3.1.1 Vertical Central Loading

Under the same loading, the pressure stress at the bottom of DWF is about 26% larger than that of the SF; the friction force of the external side-wall are almost equal, the earth pressure at the top of soil column of DWF is one fifth of that of SF, the vertical friction force of internal side-wall is almost zero. All these results match with the test(*Table 4*).

3.1.2 Horizontal Loading

Under the same loading, the average stress of DWF and SF is almost zero, which shows that the areas of its pulling part and its pressing part are equal. The earth's horizontal resistance of external side-wall is about one second of that of the actual measured data, which is different from the test results to some extent (*table 5*). The main reason is that the actual anti-pulling capacity of soil is very small and the finite element calculation cannot simulate this feature.

Table 4 Comparison of Results under Vertical Loading of 1.6MN

type	DWF		SF	
	test	FEM	test	FEM
base pressure stress (Kpa)	101.8	90.0	63.7	71.5
external side-wall fractional force (Kpa)	35.7	18.0	37.1	18.9
internal side-wall fractional force (Kpa)	/	0.8	/	/
base stress on earth column top (Kpa)	10.1	22.6	50.7	45.2
vertical displacement (mm)	0.28	0.72	0.21	0.67

Table 5 Comparison of Results under Horizontal Loading of 420KN

type	DWF		SF	
	test	FEM	test	FEM
average pulling stress force at the base (Kpa)	37.2	3.3	36.1	0.8
horizontal resistance force of external side earth at 1/2 height (Kpa)	22.3	12.0	22.4	16.9
horizontal displacement (mm)	2.66	2.63	2.74	4.26

4. Discussion on Load-bearing Capacity of DWF

Hai (海野隆哉) [3] consider that internal side earth has certain vertical and horizontal stiffness when they analyze the load-bearing capacity of DWF. When analyzing by the finite element theory, Yan(岩田敏雄) assumed that the friction force between the surface of internal side wall and the earth body is one half that of the external wall and is not beyond the limit load-bearing capacity of the bottom opening of the base.

The test results and the finite element analysis of this paper show as follows: To Q3 loess area, because the soil of earth column top within the diaphragm wall is not suppressed by the surrounding earth body, the earth column density is low, the deformation is high and the stiffness is small, the vertical and horizontal loading capacity of the earth column is small and its influence on the loading capacity of the whole foundation is very slim. Besides, by analyzing the Chinese test document about sinking of well, it can be obviously seen that the surrounding earth body also sinks when the

sink well sinks and the scope of its influence is at least bigger than the diameter of sinking wells [4]. But in this test, the diameter of the soil column within diaphragm wall is only 2/3 of the outside diameter of the foundation and its sinking along with the external side soil body is inevitable. For these reasons, the author of this paper believer that when the foundation is loaded, the whole earth body sinks along with the sinking of the whole foundation and the vertical frictional force can not be formed. Therefore, when designing this kind of foundation, the influence of the internal latera! soil column will not be taken into account. It is reasonable and safety to consider DWF as hollow foundation whose support reaction provided by the ring base as well as friction provided by the external force.

5. Engineering Example

A bridge located at 169 Km railway between Baoji and Zhongwei in northwest of China was chosen as the test spot. The bridge, which was completed in 1995, is a simple-supported girder bridge whose span is 4×32m+24m. The height of its NO.3 pier is 26.5m and its foundation is DWF. The height of the well (H) is 7.5m; the outside diameter (D) is 7m; the thickness of the wall is 1.5m and 15# concrete is used. While designing, the function of the internal earth body was not considered. The designed maximum pressure stress on base ground is 725 Kpa, the allowed load-bearing capacity is 728 Kpa.

Compared with the scheme of SF, 10% of constructing volume was saved by using DWF and the constructing period was also shortened under the same condition.

6. Conclusions

(1) The horizontal load-bearing capacity of DWF is almost the same as that of SF under the same external dimensions and the vertical load-bearing capacity of the former is less than that of the latter.

(2) The influence of internal earth column on the load-bearing capacity of the whole foundation is very small so that the function of the internal earth column is not considered in design and the calculation model can be based on the hollow foundation.

(3) The engineering example shows that DWF designed according to the above theory can obviously save the engineering cost compared with SF.

Reference

1. The Guide of the Design and the Construction in Underground Diaphragm Wall Foundation. The Same as the Explanation. The Railway Committee of Japan.
2. Yan (岩田敏雄), Underground Diaphragm Wall Foundation of the Street Bridging Bridge in Fan 饭坂）, Nov. in 1979 p33~46. Japan
3. Hai and Da(海野隆哉，大植英亮）The Designing Method and Horizontal Loading Test of Underground Diaphragm Well, 1982, Volume 36, Number 5 of the Civil Engineering Technology. p48~57. Japan
4. Lu Shishen and alike. The Foundation Test of the Bridge Base, Railway Publishing House, 1984, p131. China

Elasto-plastic foundation analysis of ship collision to the Øresund High Bridge

Ole HEDEDAL
Head of Geotechnical Analysis Group
COWI Consulting Engineers & Planners AS
Lyngby, Denmark

Dr. Hededal has extensive experience with numerical analysis using the finite element method. In particular, Dr. Hededal has been involved in development of several linear and non-linear finite element codes for research and educational purposes. He has recently been involved in the design of the Øresund Bridge and in the design evaluation of the Metro in Copenhagen.

Carsten S. SØRENSEN
Chief Engineer, Geotechnics and Foundation Engineering
COWI Consulting Engineers & Planners AS
Lyngby, Denmark

and

Associate Professor
Geotechnical Engineering Group
Aalborg University, Denmark

Mr. Sørensen has been involved in research, teaching and consulting projects for more than 20 years. The work has involved field and laboratory testing on soft and stiff soils as well as design of large bridges and offshore foundations. Recently he has been in charge of the foundation of the Øresund Bridge. He is chairman of the committee responsible for the Danish Code of Practice for Foundation Engineering.

SUMMARY

One of the governing loads on the foundation of the Øresund Link High Bridge is ship collision. In order to assess the the foundation design it was necessary to employ numerical analysis using a 2D finite element model with an elasto-plastic model for behaviour of the soil. This paper shortly presents the limestone material on which the pylons are founded and the constitutive model assumed for the limestone. The applicability and conservatism of the chosen material model was assessed by calibration to medium scale shear plate test. Finally, 2D finite element models were defined to calculate the foundation bearing capacities of pylons subjected to ship collision.

1 INTRODUCTION

The Øresund Bridge is one of the major components in the fixed link between Denmark and Sweden. The fixed link will carry railway and road traffic. It comprises a 3.5 km immersed tunnel, a 4 km artificial island and a 7.9 km bridge consisting of approach bridges and a cable-stayed high bridge. The bridge girders are composite steel-concrete truss girders. The upper deck carries a four-lane motorway and the lower deck carries a dual-track railway. The 1.1 km long cable-stayed high bridge has a free span of 490 m and a navigational clearance of 57 m.

1.1 The pylon foundation

The two high bridge pylons each consist of a cellular concrete caisson of 35 x 37 m^2 and two legs extending to level +155 m (above sea level). The caissons are founded directly on Copenhagen Limestone at level -17 m and -18 m. In order to reach the dimensions of the caisson base a simple model was established on basis of results obtained by use of the finite difference code FLAC, [4]. The model combined vertical bearing capacity of a foundation with a partial mobilisation of the passive pressure in front of the caisson. The preliminary design was then assessed to be in accordance with Eurocode 7, [1], for the ultimate limit state load cases. The accidental load case of ship collision was analysed in a later stage. The geometry and foundation conditions are shown in Fig. 1.

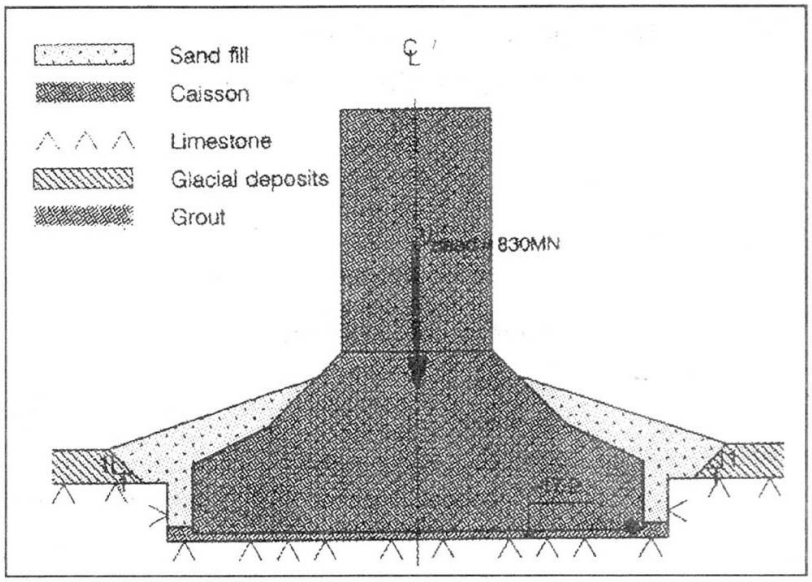

Fig. 1: Geometry and foundation conditions for pylons

1.2 Accidental ship collision

One of the governing loads on the foundation of the Øresund Link High Bridge is ship collision. The design criterion for ship collision consists of both a bearing capacity requirement and a maximum permanent displacement. This, together with the fact that the base plate dimensions were fixed, imposed constraints on the type of model necessary to carry out the assessment. Therefore it was chosen to carry out numerical analyses using a 2D finite element model with an elasto-plastic model for behaviour of the soil. This paper describes the material model used for describing the limestone behaviour, the calibration of the model and finally the quasi-static push-over analysis used to verify the bearing capacities.

2 COPENHAGEN LIMESTONE

The bridge is founded directly on Copenhagen Limestone. The experience with these foundation conditions was sparse and several series of tests (in the laboratory and in test pits) were carried out in order to obtain a better understanding of the limestone behaviour, see e.g. [3]. The test data were synthesised into a principle soil model for the limestone.

The Copenhagen Limestone is a horizontally layered deposit with fissures and layers of flint. Even though the limestone is highly anisotropic, it was chosen to apply an isostropic elasto-plastic model to the limestone. The Owner acknowledged the fact that the available computational models are essentially isotropic. Consequently, he proposed a principle model for the behaviour of the limestone which assumed isotropy.

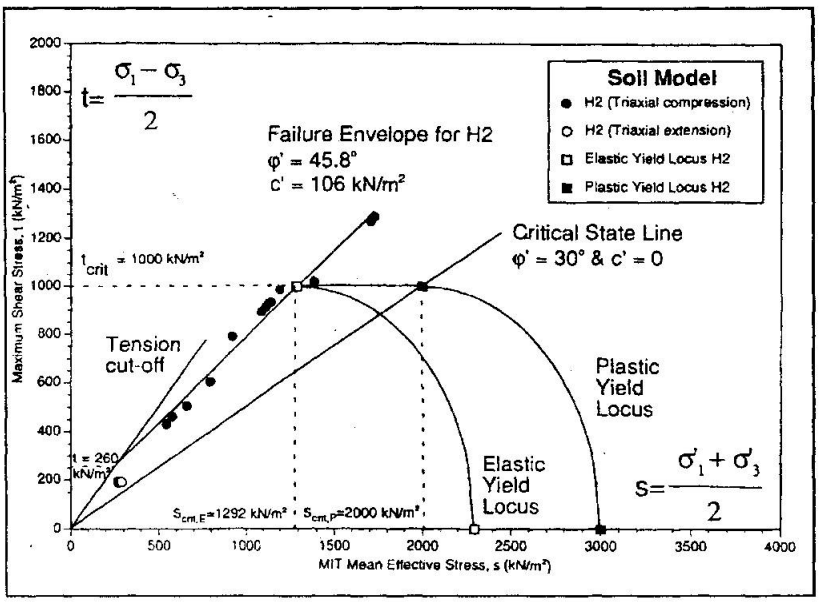

Fig. 2: Principle soil model for Copenhagen Limestone, after [3]

The principle model basically consists of 3 parts: a failure envelope, a maximum shear strength and a critical state line, which marks the transition from compacting to dilating behaviour and defines a friction angle for large deformations, i.e. the residual strength.

2.1 The constitutive model

The most important features of the limestone can be captured by the Drucker-Prager model with cap as defined by ABAQUS, [2], see Fig. 3. The Drucker-Prager yield surface represents the frictional behaviour. The cap ensures that the shear stresses can not exceed the maximum shear strength. The cap was stretched to fit the plastic yield locus shown in Fig. 2. The critical state line corresponds to a reduction of the effective friction angle from a maximum value to a residual value. At the CSL the limit on the shear stresses will in principle disappear. This feature is not captured by the DP model. Still, it was observed during the analyses that the soil did not reach the residual state, so it was not important to model this feature.

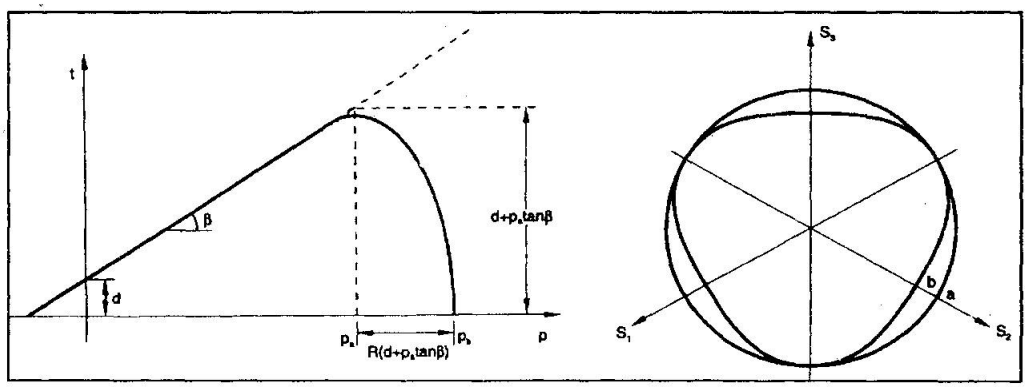

Fig. 3: Drucker-Prager model with cap as defined in ABAQUS, [2]

2.2 Representation of triaxial stress states

A characteristic of the limestone - like most soils - is that the triaxial compression strength is higher than the triaxial tension strength. In an isotropic elasto-plastic model this is reflected by a triangular shape of the deviatoric contours of the yield surface. In ABAQUS a shape correction factor is multiplied to the circular contour, see Fig. 3. For the present problem this formulation was not numerically stable, so it was decided only to use the circular contour.

This decision made it vital to calibrate the Drucker-Prager surface to match the dominating failure mode. For the horizontal ship collision, shear failure was assumed to be the governing case. Calibrating to direct shear failure lead to the following relations between Mohr-Coulomb parameters (c',ϕ') and Drucker-Prager parameters (d,β):

$$d / c' = \sqrt{3}\cos\phi' \qquad \text{and} \qquad \tan\beta = \sqrt{3}\sin\phi'$$

These relations yields highly conservative results for triaxial extension zones, whereas it is only slightly unconservative for triaxial compression, as might be experienced during passive shear failure mode.

3 ASSESSMENT AND CALIBRATION OF THE MATERIAL MODEL

Three types of medium scale tests were carried out in a test pit at Lernacken, Sweden, [3]. The test set-ups were modelled with finite elements. The three tests represented direct shear, passive shear and active shear. Thus, if the model could capture these 3 modes sufficiently well, the model could with confidence be applied to the large scale problem of ship collision to a bridge pylon.

The calibration strategy was as follows:

- Calibrate to direct shear test
- Verify that the calibration is conservative with respect to other load conditions
- Determine the corresponding Mohr-Coulomb strength parameters

The result of the calibration is shown in Fig. 4. It is seen that the model can represent different preloadings correctly, thus capturing the dependency of a geotechnical material on in-situ stresses.

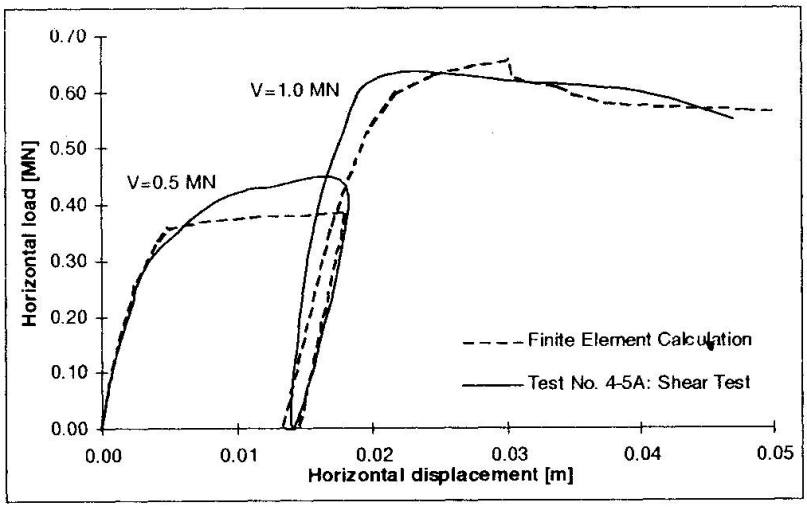

Fig. 4: Calibration to medium scale shear plate test, [3]

The calibrated model was then applied to tests representing passive shear and active shear. The passive failure mode is governed by failure in the weakest horizontal layers of the limestone. Therefore, it was assumed that the calibration would yield appropriate results for the passive failure mode. The assumption was confirmed by the calculation. The active shear failure is more dominated by the crossing of the layers, i.e. the strength of both the weaker and the stronger layers. Therefore an isotropic model should give much lower failure loads than measured in the test. The finite element model actually gave a failure load of only 20% of the measured value.

The final part of the calibration process consisted of showing that the model would yield conservative results, if the prescribed Mohr-Coulomb values were to be applied. The calibrated Drucker-Prager parameters were transformed into Mohr-Coulomb friction angle and cohesion. It appeared that the strength values prescribed in the Design Basis were about 20% lower than the results obtained by direct calibration.

The conclusions of the calibration process are:

- The Drucker-Prager soil model with cap can describe the behaviour of the limestone for load conditions dominated by horizontal shear
- Applying the Design Basis strength parameters to the computational model will yield conservative estimates of the ultimate capacity.

4 SHIP COLLISION ANALYSIS

The calibrated model was employed for a quasi-static push-over analysis of the ship collision problem. A 2D plane strain finite element model was defined. The soil behaviour was modelled using elasto-plastic models. The limestone was defined in terms of the Drucker-Prager with cap, when the calibration had proven that the results would be conservative when using the design values of Mohr-Coulomb friction parameters. The sand and the glacial deposits were modelled by a traditional Drucker-Prager yield condition. The concrete was defined as linear elastic. The stiffness of the caisson was reduced to account for the cellular structure of the caisson. Still, the stiffness of the caisson was much larger than that of the

subsoils, so exact determination of the caisson stiffness was not essential. The material parameters used in the analyses are summarized in

Table 1.

Table 1: Material properties used in FE-analysis.

Material	E [MPa]	ν	γ' [kN/m^3]	c' [kPa]	ϕ' [°]	d [kPa]	β [°]
Concrete	6000	0.2	---	---	---	---	---
Glacial deposits	50	0.3	12.5	35	34	50	44.1
Sand	50	0.3	12.5	0	35	0	44.8
Limestone I	400	0.3	12.0	0	45	0	50.8
Limestone II	400	0.3	12.0	14	33	20	43.3

Limestone II is used for the direct shear zone immediately below the caisson. Limestone I is used for other zones.

The resulting ship collision force acts at a level some 2-6 m above sea level. The position of the resultant is determined by a dynamic analysis of the entire bridge. Thereby it was possible to take into account the dynamic amplification of the maximum static load. The position of the resultant was adjusted to correspond with the overturning moment acting at maximum shear force.

Differences in foundation depth and conditions, and hence in stiffness, implied different failure loads for the two pylons, see Fig. 5. The failure mode due to ship collision to the east pylon mainly consisted of a rotation of the caisson due to a rather high position of the resultant. The bearing capacity is therefore mainly governed by passive shear failure behind the caisson, see Fig. 6. For the west pylon with a deeper foundation level and a shallower resultant, the failure mode was a combination of translation and rotation, see Fig. 7. It is seen that shear bands extend into the limestone in front of the pylon. This gives a larger zone for dissipation of energy, which is partly the reason for the higher bearing capacity.

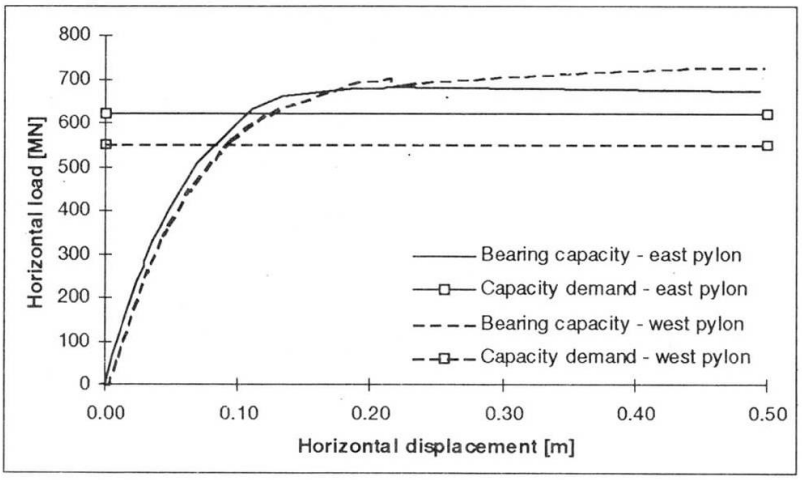

Fig. 5: Load-displacement curve for east and west pylon

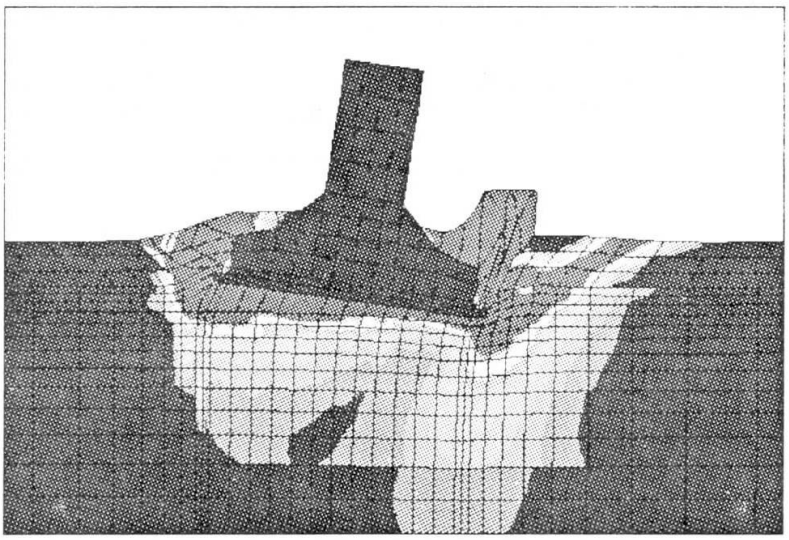

Fig. 6: Failure of east pylon

5 CONCLUSIONS

Ship collision to the High Bridge pylons of the Øresund Bridge has been analysed by means of elasto-plastic finite element models.

The results were presented in terms of non-linear load-displacement curves. They showed that the bearing capacities exceeded the maximum ship collision forces for both pylons.

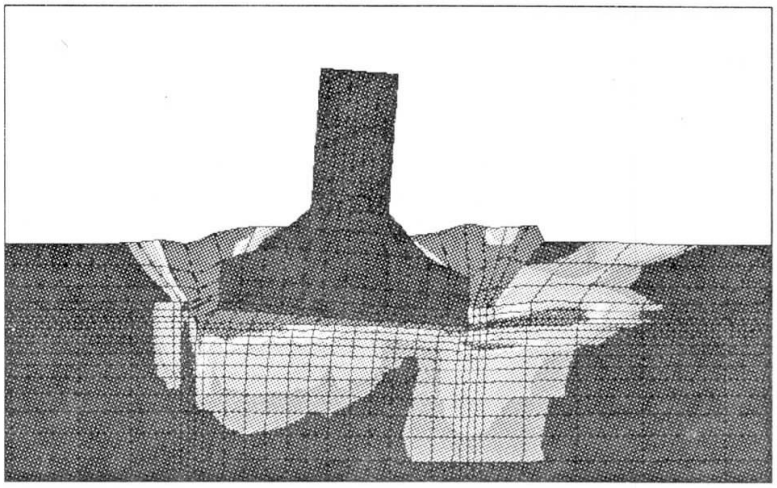

Fig. 7: Ship collision to west pylon

The application of finite element models to geotechnical problems give a number of advantages. Firstly, it is possible to determine both load capacity and displacement capacity in a consistent way - a feature that has become an essential part of modern design practise for large bridges. Secondly, careful calibration of the soil model and demonstration of an appropriate conservatism enables the engineer to design closer to the limit, thus to obtain more economic designs.

The use of constitutive modelling for soils must however still be done with care. Most of models available to the practicing engineer will generally be able to model the bearing capacity with proper precision. The deformation properties are unfortunately not as well described. Using the finite element model to determine the displacements associated with e.g. ship collision can give only a rough estimate. Therefore, there is still much work to be done on the modelling of deformations close to failure.

Studying the dynamic problem of ship impact using a quasi-static model is somewhat dubious. Especially in light of the fact that codes like ABAQUS include a fully coupled porewater-soil skeleton analysis which - in principle - allows for dynamic failure analysis. Still, the limitations in the material model's abilities in describing the volumetric strains close to failure can not justify use of such a complex analysis.

REFERENCES

1 EUROCODE 7 PART 1, *Geotechnical Design - General Rules*. ENV 1997-1, European Committee of Standardization, 1994

2 ABAQUS, *User's Manual Version 5.6*. Hibbitt, Karlsson & Sorensen Inc, 1996

3 DANISH GEOTECHNICAL INSTITUTE, *Digest report on Strength and Deformation Properties of Copenhagen Limestone*, Report No. 2-9405-244, 1994.

4 FLAC, *Fast Lagrangian Analysis of Continua - User's Manual Version 3.3*, Itasca Consulting Group Inc, 1995

DESIGN OF FOUNDATION FOR MULTISPAN ARCH BRIDGE OVER RIVER SUNGAI DINDING

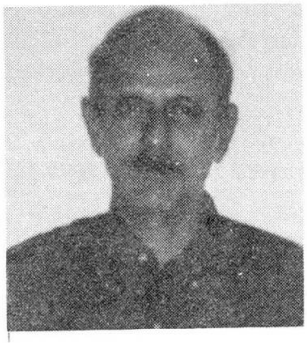

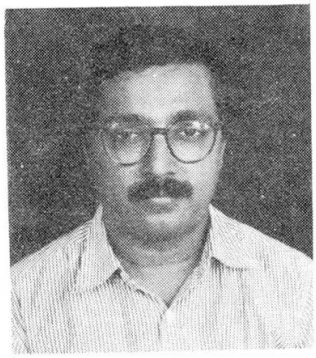

MAHESH TANDON
Managing Director,
Tandon Consultants Pvt. Ltd.

Mr Mahesh Tandon is an international expert and a most distinguished Structural Engineer. Many of the structures designed by him and his firm, in India and other countries, have received national and international recognition.His intimate knowledge and involvement in bridges from conception to completion, form his special area of expertise.

ALOK BHOWMICK
Director,
Bridge & Structural Engineering Consultants

Alok Bhowmick got his bachelor's degree at University of Delhi, and master's degree from I.I.T, Delhi. He has more than 17 years of experience in the design of major bridges and urban transportation structures, obtained essentially with consulting engineering firms. Presently he runs a consulting firm in Delhi, India.

SUMMARY

The bridge over river Sungai Dinding is being constructed north of Lumut, in the district of Manjung, Perak, Malaysia, which is about 250 Km north of Kuala Lumpur. The bridge is a part of a 13.5 Km long new dual two lane roadway project which crosses three major rivers namely Sungai Dinding, Sungai Sitiawan and Sungai Tebok Raja Samalon. The bridge over Sungai Dinding is a multispan arched deck with varying span lengths. The arches will be constructed by tied cantilevering. Once completed, it will be a landmark structure of Malaysia.

The ground conditions at the river bed are poor comprising loose sand for depths of 10 to 15 meters underlain by medium dense silty sand. The length of the piles are of the order of 40m to 65m. Precast pre-tensioned hollow spun piles of high strength concrete are employed for ground conditions that are acidic in nature. Barge impact governs the design of foundations. Raker piles are proposed for counter-acting the large lateral forces.

The paper highlights the basic design philosophy, loading & salient design & detailing features of the foundations of this bridge. The designs are based on British codes and requirements of JKA, Malaysia.

1.0 INTRODUCTION

The new Sungai Dinding Bridge under construction is the longest of the three bridges of the contract with a total length of 1246 m between abutments, Fig 1. The main river portion of the bridge is designed as reinforced concrete multispan spandrel arches with spans varying from 45 m to 90 m. The multispan arched deck with reducing span lengths from middle of the river towards the shore combined with vertical curvature of the decking presents a visually arresting architectural form. The approaches on either side of the arch spans are provided with 4-span continuous reinforced concrete box girders with intermediate spans of 45 m and end spans of 38 m.

The bridge is supported on 600 mm and 800 mm dia hollow pretensioned concrete spun piles, 40-65 meters deep passing through poor sub-strata.

The owner for the bridge is JKR, the Malaysian Government department responsible for transport. The turnkey contractor for the project is Panzana Lankhorst J/V. Engineering consultants are Robert Benaim & Associates in association with HMS Perunding (Malaysia). Proof Consultancy involving completely independent analysis and design is being done by HSS Integrated Sdn Bhd (Malaysia). Tandon Consultants Pvt Ltd is providing specialist technical support for structural analysis and design of the project to HSS Integrated Sdn Bhd (Malaysia).

2.0 SUB-SOIL CHARACTERISTICS

The site investigation indicates that the geology of the area is characterised by completely decomposed granite (CDG) some 60m below bed level. The CDG is a dense to very dense residual soil described as "Silty sand with some gravel". The alluvium soil above the CDG comprises medium dense silty sands of approximately 40 m depth. The upper-most strata consists of loose sand and silt with layers of soft clay. Fig 1 depicts a compiled sub-strata profile along the bridge.

The chemical tests conducted on soil / water samples at various depths indicate that the same are acidic in some stretches.

3.0 SPAN ARRANGEMENT & SALIENT STRUCTURAL DETAILS

3.1 Span Arrangement

The span arrangement for the main bridge over river comprises 13 reinforced concrete arches. The navigational width requiring maintenance dredging is restricted to the central 3 spans, Fig 1. The geometry of the central 90m span was derived from the requirement of 18m high and 40m wide navigational clearance. The arch has a span/rise ratio of 4:1. The bridge is on a vertical curvature with the maximum gradient of 4% at the approaches. The overall depth of the hollow box arch section is kept constant at 2.25m for the central arch and is gradually reduced to 1.6m at the end arch, Fig 2. The depth of the approach span box girders has been maintained constant at 3.0m, Fig 3. The overall width of 13.88m incorporates a 12.0m clear carriageway and 600mm walkway on either side.

The span arrangements have been optimized from structural and aesthetic considerations and arrangements made for facilitating inspection in service conditions.

A 1.0m wide opening in the top slab is provided for access into the arch box section. The bearings and soffit of the composite deck are accessed from the top of the arches. The interior of the approach span box girders are accessed from the abutments.

3.2 Bearing Arrangement

Pot Bearings are proposed to be used for the bridge. Bearings are detailed so that they can be easily replaceable by jacking up the bridge. A 10 mm vertical differential movement of the deck at individual pier position is allowed for in the design under SLS conditions.

3.3 Foundation Arrangement

Precast pre-tensioned spun concrete piles have been provided for the foundations. The choice of this type of pile was quite obvious, taking into account the long term durability, ground conditions, topography, loading & general availability. Several Malaysian companies manufacture precast spun piles and therefore their utilisation works out fairly economical.

The arch spans are supported on 800mm dia piles while the approach spans are supported on 600 mm dia piles.

The larger diameter piles are provided for river foundations where vertical loads are high in addition to barge impact loads and out-of-balance forces associated with the arch form. 600mm diameter piles are provided for the less heavily loaded approach spans, which are also not subjected to such large lateral loads. Raker piles are required to resist forces and movements caused due to out-of-balance arch action, barge impact, traction, braking, and the forces due to progressive collapse condition. A combination of raker and vertical piles have therefore been used for this project. A maximum rake of 1 in 4 has been used. Rake is provided in different direction to cater for the forces due to barge impact. For foundations of approach spans, rake is provided only along the direction of traffic.

3.4 Construction Methodology for the Bridge

For approach spans, piling will be carried out using conventional methods. Temporary sheet piling will be necessary to keep the piling rig & the working platform in dry condition. For river spans, the piles are driven by using hydraulic hammer mounted on a piling frame. In river, piling is being carried out from barges.

For off-shore pile caps, upon completion of the pile installation, sheet piles are driven around the installed piles to form a cofferdam. The purpose of sheet pile cofferdam is to enable casting of concrete pile cap in dry conditions. On-shore elevated pile caps soffit formwork is supported either using temporary scaffolding from ground or using steel clamps.

The reinforced concrete box arches are constructed by using stayed cast-in-situ cantilever construction technique using travelling formwork. The travelling formwork is designed for casting upto 5m segment lengths. The steel frame structure with attached forms, platforms and safety railings weighs about 50 tonnes. Fig. 5 & 6 shows the construction stages for the arched deck which is self explanatory.

The spandrels are cast-in-situ over arch using steel moulds with push-pull props for stability.

The steel I-beams for composite deck will be fabricated off-site and delivered by trailer to the job-site. The concrete decking will be formed with proprietary formwork system specially suited for this type of construction.

4.0 DESIGN CRITERIA FOR FOUNDATION

4.1 Design Loads (Table 1)

a) Dead Loads and Superimposed Dead Loads
Unit Wt. for concrete is taken as 24.5 kN/m^3. Surfacing load of 1.2 kN/m^2, Verge loading of 2.4 kN/m at each edge and Parapet load of 7.5 kN/m at each edge has been connsidered.

b) Highway and Pedestrian Live Loads
The British code loading of full HA and 45 units of HB loading in combinations described in BD 37/88 for four 3.0m lanes has been considered for the 12.0m carriageway. For the 600mm wide raised verges 5.0 kN/m^2 pedestrian loading has been accounted for.

c) **Loading from Barge Impact**
Barges of 5000 (DWT) travelling at 5.0 knots have been considered for evaluating forces on foundations in navigation portion. In the remaining foundations, loads of 50% of those applicable to the navigation channel, have been considered. Reference nay be made to Fig 7 for details.

d) **River Flow**

Maximum current velocity considered is 1.0m/s (2.0 knots) for the full water depth for SLS check increased by 50% under ULS conditions.

e) **Floating Debris Loading**

For all river piers, a nominal force of 100 kN at SLS increased by 50% under ULS, representing debris loading, is applied in any direction at pile cap level and combined with the force due to river flow.

f) **Seismic Loading**

Records show no significant seismic activity in the immediate area of the project. However, a nominal horizontal load equivalent to 0.03g as a ULS load case has also been considered.

g) **Wind Loading**

Forces due to wind are determined in accordance with BD 37/88 with an assumed mean hourly wind speed of 30 m/s.

h) **Differential Settlement**

The structure has been designed for a long term differential settlement of 10 mm between adjacent foundations.

i) **Construction Stage Loading**

Construction sequence of a typical arch and that of the river spans from one end are shown in Figs 4 and 5. These are duly accounted for in the design.

j) **Temperature Loading**

Forces and movements due to temperature are determined from the following:-
Temperature Range = 20^0C – 40 ^{0}C
Mean Temperature = 30^0 C

Forces and stresses arising from differential temperature are determined in accordance with BD 37/88.

k) **Accidental Loading due to Progressive Collapse.**

The detailed design for the superstructure of the river spans includes a check against progressive collapse in the event of a foundation or arch being removed by barge impact. For foundation removal it is assumed that the two connecting spans will be demolished and that the adjacent spans suffer damage requiring extensive repair. For the removal of an arch it is assumed that extensive remedial works will be required on the adjacent foundations and adjacent spans.

4.2 Load Factors & Load Combinations

For loads which are covered in BS codes, the load combinations are as per BD 37/88 and therefore not reproduced. However load combinations under barge impact, progressive collapse, and seismic, which are not covered in BD 37/88. Table 1 gives the load factors considered.

4.3 Design Criteria, Assumptions for Pile Foundation

The factors of safety considered for Ultimate Skin Friction (SF) and for Ultimate End Bearing (EB) in the design are:

a) Normal Service Conditions:

- Vertical Load carrying capacity under compression at SLS : (SF/2.0 + EB/3.0) or (SF+EB)/2.5 whichever is smaller
- Vertical Load carrying capacity under compression at ULS : (SF+EB)/1.5
- Tension at SLS : (SF)/3.0
- Tension at ULS : (SF)/2.0

b) Barge Impact & Progressive Collapse

- Tension at ULS : (SF+EB)/1.2
- Tension at ULS : (SF)/1.2

For establishing the load carrying capacities, trial piles were installed and tested at selected locations. Due to the high load carrying capacities of piles and the practical difficulties of testing inclined piles, the trial piles were kept vertical. Also due to presence of large numbers of raker piles, it was found difficult to carry out load test on working piles. In view of this, the factors of safety given above were increased by 10% to ensure that sufficient capacities of the working piles are attained.

Based on load testing of trial piles, the following capacities were arrived at:

- For 800mm dia Spun piles :
  - Nominal Working Load : 300 tonnes, compression
  - Maximum Accidental Load : 550 tonnes, compression
    265 tonnes, Tension
- For 600mm dia Spun piles :
  - Nominal Working Load : 200 tonnes, compression
  - Maximum Accidental Load : 500 tonnes, compression

4.4 Pile Particulars

The piles were manufactured by the Malaysian company, ICP.
For pre-tensioned piles, due to the use of spun technology in concreting, very high strength can be achieved with low w/c ratio. Concrete grade used & the particulars of the mix used are as follows :

- Characteristic Strength : 78.5 MPa
- Water / Cement Ratio : 0.32
- Workability (Slump) : 40 mm
- Cement Type : OPC
- Mix Proportions
  - Cement Content : 500 Kg
  - Water Content : 160 litres
  - Fine Aggregate Content : 650 Kg
  - Coarse Aggregate Content : 1100 Kg
  - Admixture, Mighty 150 : 7.0 Kg
- Designed Density of concrete : 2417 Kg/m^3

5.0 DESIGN AND DETAILING OF FOUNDATION

The foundation is designed for loads and moments as per the loading criteria discussed earlier. For the purpose of load assessment on pile group, the entire structure consisting of 13 arches, from expansion joint to expansion joint, is modelled as a 3D-space frame . The pile group support is modelled as springs with stifnesses in all the six directions. The pile group stiffness is calculated by analysing each pile group separately using a 3D-space frame model. In order to simulate the variations in the ground profile, two extreme conditions has been considered while fixing the depth of fixity of pile.. Free length of pile is maximum when maximum dredging & maximum scour is considered simultaneously. Free length of pile is minimum when no dredging and no scour is considered. Fig 6 indicates the two conditions.

The capacity of each pile is checked for the combined axial load and bending forces resulting from the load cases being considered including necessary allowances due to slenderness.

For the design of pile, there are three critical sections, namely:

a) Pile section in running length
b) Joints of piles to make up the required length
c) Junctions of pile-pile cap interface

For evaluating (a), the normal SLS and ULS checks are performed
For evaluating (b), the spun piles are joined by full penetration weld of size 12mm and 14mm for 600mm and 800mm piles respectively. For the purpose of capacity calculation, 5mm corrosion of weld has been assumed.
For evaluating (c), the two alternative types of details indicated in Fig 8 are considered.

6.0 CONCLUSION

Poor sub-soil for a large depth coupled with large lateral loads due to arched deck and forces of possible barge impact posed a challenge for the foundation designers. Prestressed concrete spun piles proved to be an effective solution for the foundations of this bridge. Use of spun technology in concreting at factory environment ensured that very high strength could be achieved with low w/c ratio.

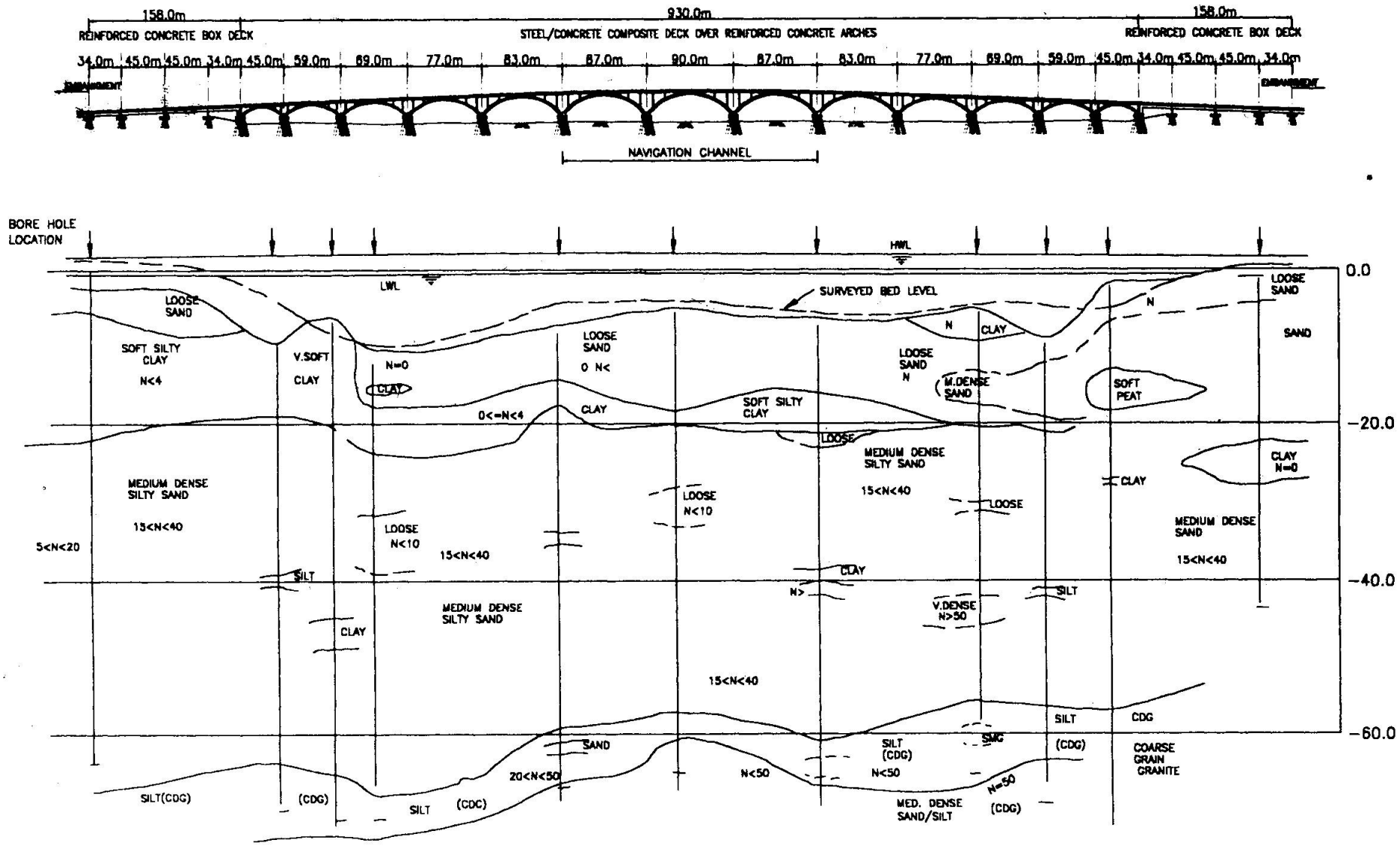

Fig.1 : GENERAL ARRANGEMENT & SOIL PROFILE

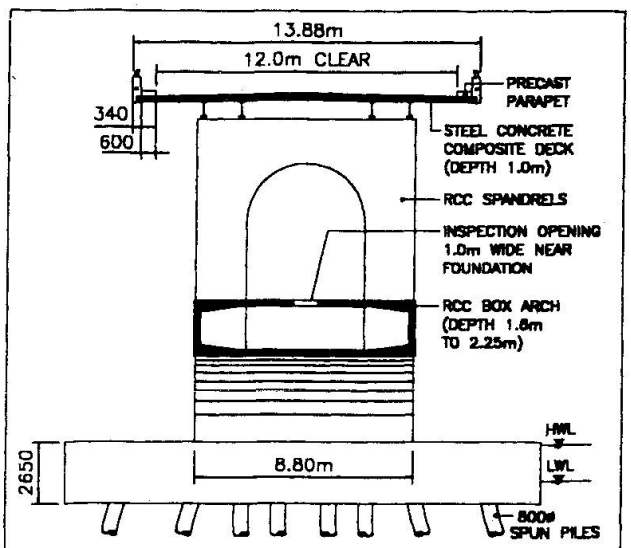

Fig. 2 : TYPICAL CROSS SECTION THROUGH ARCH SPANS

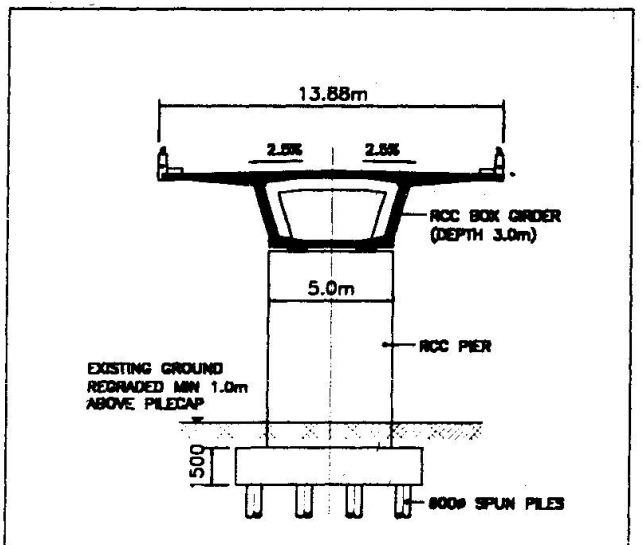

Fig. 3 : TYPICAL CROSS SECTION THROUGH APPROACH SPANS

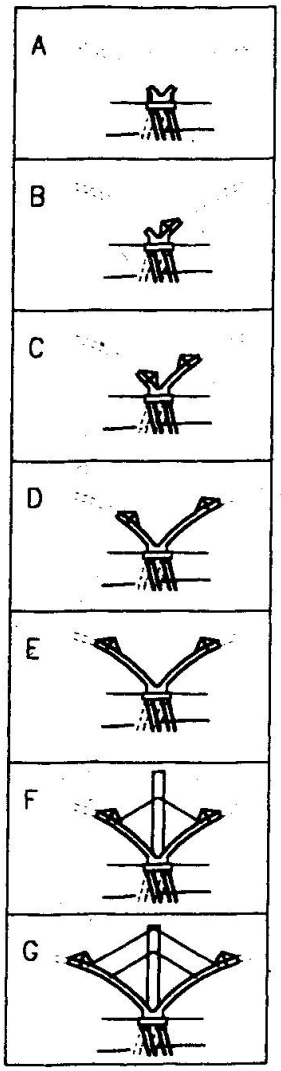

Fig.4 : TYPICAL CANTILEVER CONSTRUCTION SEQUENCE FOR ARCH USING STAY

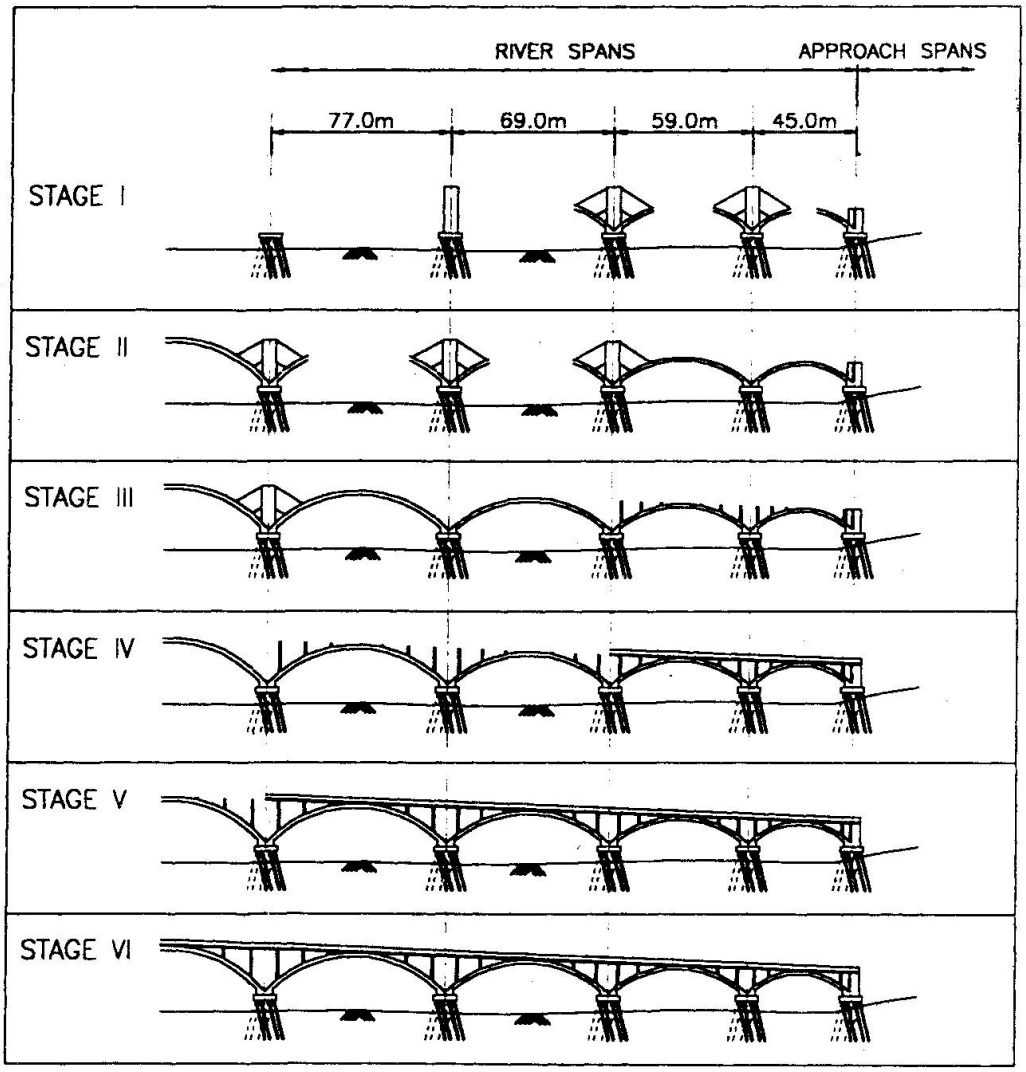

Fig.5 : CONSTRUCTION STAGES FOR BRIDGE

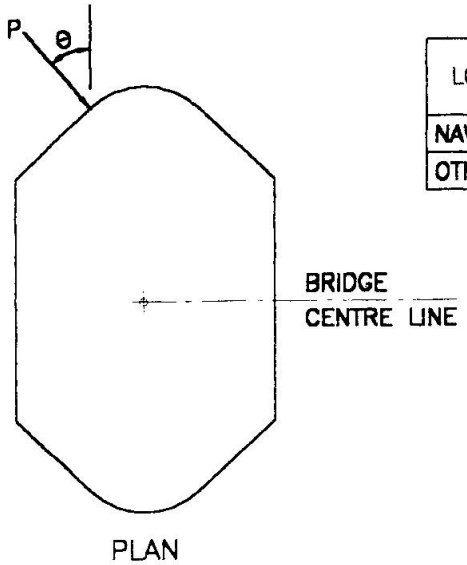

LOCATION OF PIER	ANGLE OF IMPACT, θ						
	0°	15°	30°	45°	60°	75°	90°
NAVIGATION CHANNEL	12	11	10	9.0	8.0	7.0	6.0
OTHER FOUNDATIONS	6.0	5.5	5.0	4.5	4.0	3.5	3.0

VALUES OF STATIC LOAD P (MN)

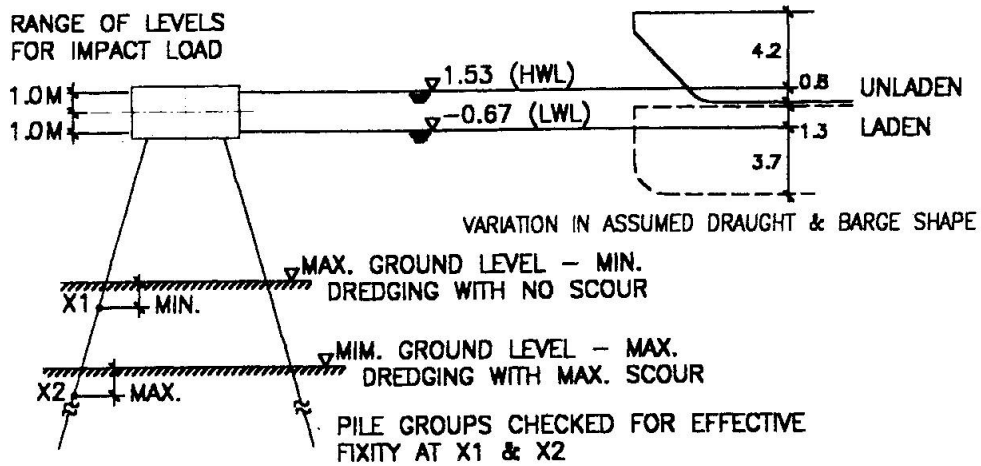

Fig.6 : LOADING ASSUMPTIONS FOR SHIP IMPACT

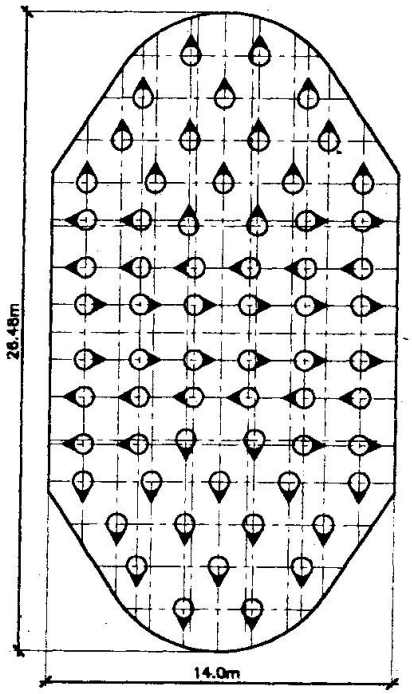

TOTAL PILES = 64 Nos.
RAKE = 1:4 (DIRECTION SHOWN)
Fig.7 : TYPICAL PILE SETTING LAYOUT FOR NAVIGATION PORTION

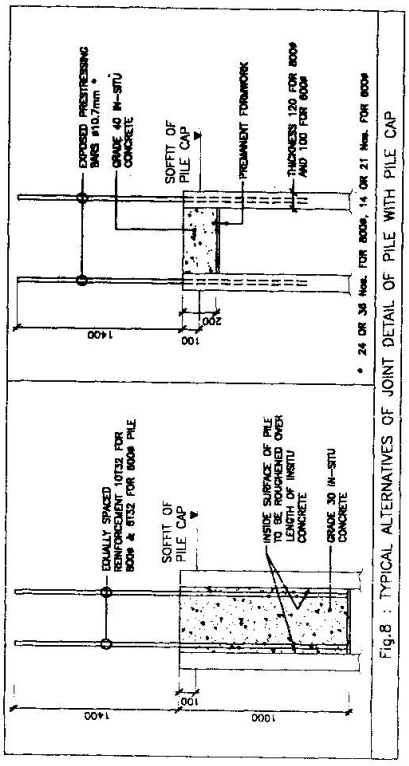

Fig.8 : TYPICAL ALTERNATIVES OF JOINT DETAIL OF PILE WITH PILE CAP

Load factors and load combinations for highway loading shall be in accordance with BS 5400: Part 2 as implemented by BD 37/88. Additional load factors and load combinations shall be as described below :

loading	loadcases 1 – 5 SLS	ULS	A ULS	B ULS	C ULS
self wt.	*	*	1.0	1.0	1.0
superimposed DL	*	*	1.0	1.0	1.0
carriageway surfacing	*	*	1.0	1.0	1.0
LL–HA	*	*	0.0	0.0	0.33
LL–HB	*	*	0.0	0.0	0.0
LL–pedestrian	*	*	0.0	0.0	0.0
temperature	*	*	0.0	0.0	0.0
shrinkage	*	*	0.0	0.0	0.0
bearings	*	*	0.0	0.0	0.0
stream flow	1.0	1.5	1.0	1.0	1.0
ship impact	0.0	0.0	1.0	0.0	0.0
progressive collapse	0.0	0.0	0.0	1.0	0.0
seismic	0.0	0.0	0.0	0.0	1.25
river debris	1.0	1.5	0.0	0.0	1.0

* loadcases 1–5 as combinations in Table 1 BD 37/88

loadcase A ship impact
loadcase B progressive collapse
loadcase C seismic

Table 1: LOAD FACTORS & LOAD COMBINATIONS

Bridge Foundations Design Practice - Codes Development in Russia.

Vadim SELIVERSTOV
Civil Engineer, P.E.
Giprotransmost J.S.Co
Moscow, Russia

Vadim Seliverstov, got his civil engineering degree in 1981 at Automobile and Road Technical University of Moscow. He has more than 17 years professional experience in bridge engineering. Vadim Seliverstov is now with a consulting firm and is involved in major bridge projects.

SUMMARY
This paper presents an overview of bridge foundation design practice in Russia. General principles specified in the current design codes regarding bridge foundations are briefly discussed. Limit states principles adopted for design of bridge foundations are summarised. A comparison with some provisions of codes of other countries is briefly discussed. Also some information on methods of scour assessment at bridge piers including consideration of influence on construction sequence is given. Some general notes to improve design procedures are introduced in light of the recent change of codes in Russia.

1. INTRODUCTION

The reliability of any bridge and its economic viability is not based solely on the choice of superstructure type. The proper selection of the substructure system including the details of the elements for that system plays an important role also. The cost of bridge foundations is normally about 30% of the cost of the bridges. Along with this construction time and labour intensity related to bridge foundations give about 40% of the time and labour intensity required for the whole bridge. In complicated geological conditions and where foundations are needed to be constructed at a large water depth, the cost of substructures may reach up to 60% of the total bridge cost. Therefore selection and design of the effective foundation for bridge piers is an important consideration and depend upon many aspects. These are loading conditions, bridge pier geometry, geotechnical and hydrologic conditions at the site.

2. MAIN PROVISIONS OF FOUNDATIONS DESIGN

2.1 Methods and design codes

Considering the required high reliability of foundations, in some countries the design is based on permissible stress procedures. In the Russian practice the limit state principles were adopted for design of bridges since 1962. The code requirements are specified for two groups of limit states. The design of bridge foundations is based on the requirements of codes: СНиП 2.05.03-84* «Bridges and culverts» {1}, СНиП 2.02.01-83 «Foundations of buildings and structures» {2}, СНиП 2.02.03-85 «Pile foundations» {3}. The workmanship levels are specified by the other code.

The Bridge code СНиП 2.05.03-84* {1} has single volume and covers design of new and rehabilitation of existing highway, railway, pedestrian and combined (highway - railway) bridges and culverts in Russia. Bridge foundations are designed to withstand loads stipulated by the Bridge code . Also this code provides the requirements for structural detailing of bridge foundations. The current Bridge code does not specify qualitative and quantitative criteria of limit states for particular structure types, but contains them in general form only. Generally in connection to bridge foundations the first limit state relates to a loss of bearing capacity of soils, stability of foundation due to overturning or sliding, strength and stability of structure and its structural elements. The second limit state covers deformation of bearing soils below the foundation (settlements, tilting, horizontal displacement), crack resistance of reinforced concrete foundation structures.

The following Table 1 summarises the types of calculations to the 1st and 2nd limit states. The objective of calculations to the code is that the abovegiven limit states should not occur within the expected lifespan of the structure. This is ensured by the use of a system of coefficients applied to nominal loads and strength characteristics of materials.

Types of calculations	Shallow foundations of		Deep foundations of	
	abutments and piers at bank slopes	piers	Abutments and piers at bank slopes	Piers
Limit state I				
Bearing capacity of soil (rock)	+	+	+	+
Stability of foundation against overturning	+	+	-	-
Stability of foundation against sliding	+	-	+	-
Stability of foundation against deep shear	+	-	+	-
Strength and stability of foundation structural members	+	+	+	+
Limit state II				
Deformation of bearing soils (settlements, tilting, horizontal displacement)	+	+	+	+
Crack resistance of reinforced concrete foundations	+	+	+	+
Crack resistance of concrete foundations	-	-	+	+

Table 1. Types of calculations to limit states

Geotechnical design parameters to be used for the analysis of capacity of bearing material are determined in accordance with the requirements of the other code - СНиП 2.02.01-83 «Foundations of buildings and structures». For the cases not covered by this code the geotechnical design parameters are determined in accordance with the approach established in the Bridge code. Pile foundations are analysed to the methods stipulated in СНиП 2.02.03-85 «Pile foundations».

2.2 Analyses of foundations

2.2.1 General considerations

When computing foundations (e.g. determination of load effects acting in a cross section of members, pressure on soil, horizontal and angle displacements) the surrounding foundation soil is allowed to be considered as linearly-deformable system {1}. This linear-deformable system is characterised by coefficient of deformation, increasing proportionally with depth.

Computation of structural strength is made {1} using reliability coefficients of dead loads $\gamma_f > 1$, in case these loads increase a design action (e.g. selfweight of substructure when calculating section strength or resistance of bearing material). In case dead loads reduce the design action, the reliability coefficients are taken as $\gamma_f = 0.9$ (e.g. selfweight of substructure when calculating pier to stability against overturning).

In the Russian and other countries practices to optimise foundations of various types, load tests of rock or soil and individual structures are normally conducted. The most widespread are plate bearing tests, pile tests (trial piles or test piles). These tests are performed to assess the bearing capacity and modulus of the ground, to investigate performance, to check quality of construction.

2.2.2 Bearing capacity of founding material

Design resistance of founding soil (axial capacity) below shallow foundation or caisson is determined {1} from the equation

$$R = 1.7\left\{R_0\left[1 + k_1(b+2)\right] + k_2\gamma(d-3)\right\} \qquad (1)$$

In the above equation R is the design resistance of founding soil, kPa; R_0 is the conventional resistance of soil (the recommended values are given in the Bridge code), kPa; b is the width (the lesser side or diameter) of foundation, m (when the width of foundation exceed 6 m, b is taken as 6.0 m); d is the depth of foundation founding, m; k_1, k_2 are the coefficients depending on the soil type, m^{-1}; γ is the design specific gravity of soil layered above the bottom of foundation (γ may be taken as 19.62 kN/m^3).

According to the AASHTO specifications for highway bridges the ultimate bearing capacity of soil is recommended to be estimated using the following formulae

$$q_{ult} = c\,N_c + 0.5\gamma B N_\gamma + q N_q \qquad (2)$$

The allowable bearing capacity is determined as

$$q_{all} = q_{ult} / FS \qquad (3)$$

where c = soil cohesion, N_c, N_γ and N_q = bearing capacity factors based on the value of internal friction of soil, B = width of footing, q = effective overburden pressure at base of footing.

Design resistance of non-weathered rock (axial capacity) is determined {1} from the equation

$$R = R_c / \gamma_q \qquad (4)$$

where R = design resistance of rock, kPa; R_c = strength of rock samples under uniaxial compression, kPa; γ_q = reliability coefficient of rock material, normally taken as 1.4.

According to the AASHTO recommendations the ultimate bearing capacity of footings on rock is estimated as

$$q_{ult} = N_{ms}\,C_o \qquad (5)$$

where N_{ms} = coefficient factor which depends on rock mass quality and is given in AASHTO in the table form, C_o = compression index, which is normally determined from the results of laboratory testing of rock core. According to the AASHTO recommendations a minimum factor of safety is taken as 3.

Compared to the Russian practice the AASHTO Standard Specifications for highway bridges stipulates a more differential approach to determine an allowable contact stress for foundations on rock. E.g. the allowable contact stress below foundation on rock is determined from the results of laboratory testing of rock and the RQD (rock quality designation) values or other rating system. A direct comparison of these two approaches is rather complicated but conventionally based on a review of reliability factors, the allowable bearing pressures (design resistance in the Russian terminology) on soils and rocks obtained using the Russian code approach are larger in some cases by up to 30%.

2.2.3 Other aspects of foundation design

Normally the foundation members are designed with non-prestressed reinforced concrete. These members are analysed to specified in the Bridge code crack resistance category. The maximum specified by the Bridge code {1} crack opening is 0.30 mm. A more precise ultimate value of crack opening is taken depending on condition of the member behaviour in a foundation structure. E.g. in the zone of ice drift, the crack opening is limited to 0.15 mm. And for structural members within the water reservoirs (formed by dams), if a number of freezing / thawing cycles exceeds 50, the value of crack opening should not exceed 0.10 mm. In the BS 5400 the maximum design crack width is limited by 0.25 mm and depends on the environment regarding 4 categories. A comparison has shown that in {1} a more detailed consideration for various conditions has been provided.

One of the controversial questions in foundation design practice is the differential settlement criteria. The opinion on an acceptable value of differential settlement differs between design offices, and particularly for foundations of continuous bridges. According to the American practice {4} it is recommended at a stage of preliminary design to assume differential settlements equal to a fraction of the average of adjacent span lengths for pile foundations – 1/500, for spread footings on soil – 1/1000, for spread footings on rock – 1/2000. However the values to be used for the final design are not specified, they are recommended to be determined from the project soils report or by consultation with the geotechnical engineer. The AASHTO Standard Specifications for highway bridges require to consider differential settlement in the analyses and that its value should not exceed the tolerable movement of the structure. The same approach is stipulated by BS 5400 (part 2). In the Russian bridge code {1} the differential settlement is limited by a bend angle between adjacent spans caused by pier settlements, being 0.2 %.

The deck designed to accommodate large differential settlements is likely to be more expensive since the differential settlement may govern the design. On the other hand this cost can be negligible compared to provision of very stiff foundation designed for a small amount of differential settlement. Therefore the final choice of foundation have to be based on a review of alternative solutions supported by technical and cost comparison.

3. ASSESSMENT OF SCOUR

3.1 General

One of the most important aspects in bridge foundation design is an assessment of scour. The types of scour at bridges is normally divided into three main categories: natural, contraction and local. Natural scour relates to fluviomorphological process in rivers and occurs irrespective of whether the bridge is there or not. Contraction scour occurs because of the contraction of the waterway by the bridge. Local scour is caused by the interference of the piers and abutments with the flow.

The local scour effects at piers, abutments, training works and temporary works for bridges over rivers have attracted the interest of many engineers and researchers. However the local scour problem resulting in bridge pier failure and inadequate foundations still exists and is actual for the current practice. The present discussion will concentrate on methods of assessing local scour.

In the recent years the engineers have used various methods for local scour prediction which may lead to essential variability in resulting values. Based on the results of researches, generalisation of theoretical, experimental and field data a new code of practice for local scour assessment has been recently developed in Russia. This code of practice СП 32-102-95 "Methods of local scour calculation" {5} have regulated the principal approaches and methods of local scour calculation taking into account type of bridge structures, their structural features and various geological conditions.

The code {5} covers assessment of local scour depth for the following elements of bridge crossing: piers; abutments; approach fills at floodplains; guide banks and groynes. The given in the code methods allow to estimate scour effects in cohesionless and cohesive materials. For cohesionless material scour analysis is stipulated for two cases: sediments transporting condition and clear water condition. Also a special consideration is given to pier foundations on piles, where analysis of scour depth is dependant on location of pile cap relatively river bed after occurred contraction scour.

3.2 Estimating Local Scour in Cohesionless Soils

To predict the depth of scour in cohesionless soils adjacent to a pier (in a form of single pile etc), having permanent width of section within water depth, two cases are considered in {5}: sediments transporting condition and clear water condition. The following equation is recommended for sediments transporting condition

$$h = 0.77H^{0.4}b^{0.6}\left(\frac{V}{V_B}\right)^{1/2} MK \qquad (7)$$

In the above equation *h* is the depth of scour measured below river bed level after contraction scour, m; *H* is the depth upstream of pier, m; b is the width of pier, m; *V* is the approach flow velocity, m/s; V_B is the turbid (characterising suspended sediment presence) velocity for the soils under consideration, m/s; *M,K* are the coefficients of shape and angularity.

The established methods allow to analyse the local scour effect at piers of any configuration. E.g. the pier, having a variable section within the stream depth, is divided into elements of constant width and the «input» of each element into formation of the local scour depth is determined. In this case for sediments transporting condition the following equation is recommended:

$$h = 0.77H^{0.4}\left(\frac{V}{V_B}\right)^{1/2} F(b) \qquad (8)$$

where $F(b) = \sum_{i=1}^{n} b_i^{0.6} M_i K_i f_i$ (9)

In the above equation *F(b)* is the parameter, taking into account pier geometry, $m^{0.6}$; b_i is the width of each pier section composed of n variable structural elements, m; M_i, K_i are the coefficients of shape and angularity of each variable pier element; f_i is the conditional volume coefficient.

From the European practice it is known {6} that estimation of local scour at piers (non-cylindrical shape) may be obtained e.g from formulae:
scour depth = $d_s f_2 f_3$
where d_s is the scour depth at cylindrical pier, f_2 is the factor to account for pier shape, f_3 is the factor to account for oblique flow.

To calculate the scour depth at the cylindrical pier, a number of empirical formulas for various conditions is suggested {6}. But in general all of them account for the two parameters: stream velocity and pier width. Furthermore it may be concluded that the methods stipulated in the Russian code of practice {5} consider more than two parameters. In this light it also should be noted that some engineers consider a practice to account for many variable parameters, when assessing the local scour effect, in reality has not proved to be more reliable.

3.3 Influence of Scour on Temporary Structures

Typically the construction of foundations requires initial placement of sheet piling. When designing temporary structures within the river, it is important to take adequate account of the effect of scour. In some cases the depth of scour at sheet piling may exceed the predicted value of scour at the permanent pier. Therefore special measures is needed to be adopted before sheet piling are removed.

Based on the recent model studies the most rational sequence of sheet piling construction may be determined {7}. To control the minimum scour depth, the construction have to be commenced at longitudinal axis of sheet piling from downstream. Parameters and sequence for the outlined rational placement of sheet piling of cylindrical shape are given in Table 2.

Sequence	1	2	3	4
Cross section		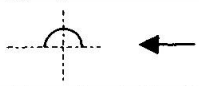	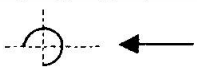	
M	1.70	1.12	1.02	1.00
K	0.80	0.63	1.00	1.00

Table 2. Parameters of effective construction sequence. *Note*: for notations M and K see sub-chapter 3.2

Similar investigations were conducted for sheet piling of non-cylindrical shape. Based on the results of model

study, the most rational scheme of construction have also been outlined. The placement of sheet piling have to be commenced at one side only and be proceeded in the upstream direction.

4. RENEWAL OF CODES

A new system of normative documents for construction was put in power in 1995 in Russia. This new system establishes three levels of normative documents: 1 – Federal codes and standards (Building norms and regulations, State standards, Codes of practices); 2 – Regional codes; 3 - Standards of branches of industry (standard of enterprise, etc).

Based on the previous experience, the codes for bridge construction sector have to be reworked normally every 7-10 year period. However in the current practice a number of relevant design and construction codes have become obsolete. E.g. the Bridge code was issued in 1984. Due to that fact a fundamental revaluation is required, including researches and generalisation of national and foreign experience. Some of this work have commenced and further is currently under planning.

One of the first steps towards the renewal of bridge codes was the development of Regional standard TCH 32 {8}. This new regional standard was drafted in 1997. The main objective of this new standard is to reflect the specifics of bridge design in Moscow and to improve reliability and durability of bridge structures. Section related to foundations contains more hard terms (compared to the Bridge code) to concrete class, its frost resistance and watertightness. The draft TCH 32 was being studied and reviewed by the appropriate authorities and is expected to be revised during 1998 to take account of the comments.

In the light of codes renewal some general notes to improve the existing design procedure are introduced below.

For the design to limit states principles a system of coefficients have been established. These coefficients consider reliability on the basis of structures importance classification and working conditions. However the bridge comprises various structural elements which act a different role in the whole structure. When the ultimate state is reached by one of the elements, their failure may have different consequences. Therefore the reliability of elements have to be differentiated in the whole structure.

The recent study {9} of design requirements currently in use for determination of loads, having hydrologic and meteorological nature, has shown inadequacy of existing codes. This study have concentrated on the aspects related to temporary structures, however the main results are also applicable to permanent structures. E.g. the reliable functioning of temporary structures within the rivers demand hydrologic (hydraulic) justification. The worked out recommendations suggested to widen the existing range of the design flood return period in the directions of lower and higher probabilities of exceedance. Thus the design have to be elaborated in the range from a 100-year to 2 year return period. The choice of an optimum range of probability of exceedance have to consider importance classification of permanent structures and probability distribution of hydrologic characteristic.

REFERENCE

1. СНиП 2.05.03-84* (Building Norms and Regulations). Bridges and Culverts. Minstroy of Russia, 1996. (in russian).
2. СНиП 2.02.01-83 (Building Norms and Regulations). Foundations of buildings and structures. Gosstroy of USSR, 1985. (in russian).
3. СНиП 2.02.03-85 (Building Norms and Regulations). Pile Foundations. Gosstroy of USSR, 1986. (in russian).
4. Analysis and Design of Reinforced Concrete Bridge Structures. ACI 343R-88. American Concrete Institute, 1988.
5. СП 32-102-95. (Code of practice). Structures of bridge crossings and approach fills. Methods of local scour calculation. Corporation "Transstroy", 1996. (in russian).
6. Farrraday R.V., Charlton F.G. Hydraulic factors in bridge design. Hydraulics Research, Wallingford, Oxfordshire, 1983.
7. TSYPIN V., Hydraulic calculation of sheet piling for construction of bridge piers. Timr Journal, November-December, 1996. (in russian).
8. TCH 32, Regional building norms for design of town bridge structures in Moscow, Draft, Giprotransmost,Corporation Transstroy, Moscow, 1997. (in russian).
9.SELIVERSTOV V., Specified requirements and recommendations to determine forces resulted from hydrologic and meteorologic action for design of temporary structures, Informavtodor, 8, Moscow, 1997. (in russian).

Pylon Foundation Design of Wuhan Bai Sha Zhou Bridge

Xuchu Zhu
Deputy General Engineer
Major Bridge R & D Institute
Wuhan, China

Xuchu Zhu, born 1943, graduated from Tongji University. He has undertaken bridge design for 25 years and participated into the design work for 15 major bridges.

Zhengwu Yang
Senior Engineer
Major Bridge R & D Institute
Wuhan, China

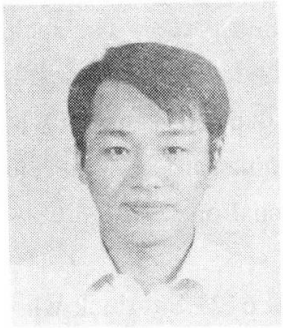

Zhengwu Yang, born 1963, got his civil engineering degree in Shanghai Railways University. Since his graduation in 1984, he has been involved in the design work of major bridges.

SUMMARY

Wuhan Bai Sha zhou Bridge is a cable-stayed bridge with 618.0m main span. Since the bearing bedrock at the bridge site is soft rock which brings a relatively lower bearing capacity, a composed stiffened girder with steel box girder at mid-span and PC box girder at both ends are applied in order to eliminate the dead load of superstructure as well as light weight foundations which are more easily constructed. To meet the strict construction schedule presents another challenge in the project. Based on comparison among foundation alternatives, design of pylon piers are introduced focusing on structural design and constructional methods.

1 FOUNDATION DATA & ENVIRONMENT

The two pylon piers of the Wuhan Bai Sha Zhou Bridge are located in the deep water of the Yangtze River's main flow. The main span between the two pylons and the north side span are within the navigational domain of the current river channel, while the south side span might become a downstream navigational channel in some dry seasons under present river conditions and will become a fully navigational channel after realignment of the waterways. The water depth at the two piers changes along with the alteration of the flood seasons and the dry seasons as well as the variation in scour and deposition .According to statistical data, water depth at the two piers ranges from 12m to 25m and flow velocity from 2.0m/s to 3.0m/s.

As a result of geological survey, the thickness and depth of overlays at the two piers are roughly the same, all bedrock is soft rock. The overlay of the second pier in boring is 10.9~14. 8m deep, at the top of which are loose~denser fine sand, gravel sand and round gravel, at the bottom are hard plastic or medium hard clay, and dense round gravel. The rock surface is even, which is mainly composed of soft sandy mudrock, sandy mudrock, loose argillaceous sand rock, sand stone and gravel rock, which have low strength. The depth of each rock layer is stable with low fluctuation. Influenced by tectonic movement, local joints are well developed in bedrock at pier position. Relatively hard sand stone is deeper than usual one.

The overlay of the third pier in boring is 20.6~21.8m thick whose depth, stratification and textual composition are similar to those of the second pier except slight difference in thickness. Formation of the bedrock at the third pier, which is made up of soft rock, is the same as that of the second pier with little discrepancy in depth, stratification and textual composition. The bedrock is made up of soft rock. The depth of the sand stone is approximately the same as that of the second pier.

The geological conditions of the second and the third pier are almost identical. If the same foundation type is used for the two piers in hydrological calculations, the local scouring level of the two piers is very approximate, and both of the bedrock strength changes from 0.5MPa to 2.5MPa— that is the premise why the same type foundation is applied for the two piers.

2 FOUNDATION TYPES OF THE PYLON PIERS

According to the above-mentioned geological conditions, a caisson foundation and a cast-in-situ bored pile foundation are selected for comparison.

2.1 Floated steel caisson foundation

The floated steel caisson foundation is one of widely used and safe foundation types in China. There are thick dense gravel layers along the dedrock of the bridge piers which can act as bearing layers in caisson foundation, on the basis of which design calculations are conducted. The calculated results show that the caisson foundation is reliable in terms of safety and bearing capacity during its fabrication, flotation and operation. A layer of 6~8m deep hard plastic ~ medium hard clay over supporting layers which the caisson shall go through during its sinking is the only obstacle of the application.

2.2 Cast-in-situ bored pile foundation

The cast-in-situ bored pile foundation is another foundation type with many successful examples in deep water which has been used in China extensively. It is classified in conformity with different alignment and watertight methods. In the design for the bridge, the cast-in-situ bored pile foundation with double-walled steel cofferdam and a suspended box cofferdam respectively are compared for the two pylon piers.

3 COMPREHENSIVE COMPARISON OF FOUNDATION TYPES

3.1 Comparison of structural formation

3.1.1 Floated steel caisson foundation

While using caisson foundation, caisson sinking by air curtain technique is not very effective because the caisson shall go through the thicker hard clay layer. In doing so, the self-weight of the caisson foundation is required to be very heavy and other measures shall be taken at the same time. The size is illustrated in Figure 1.

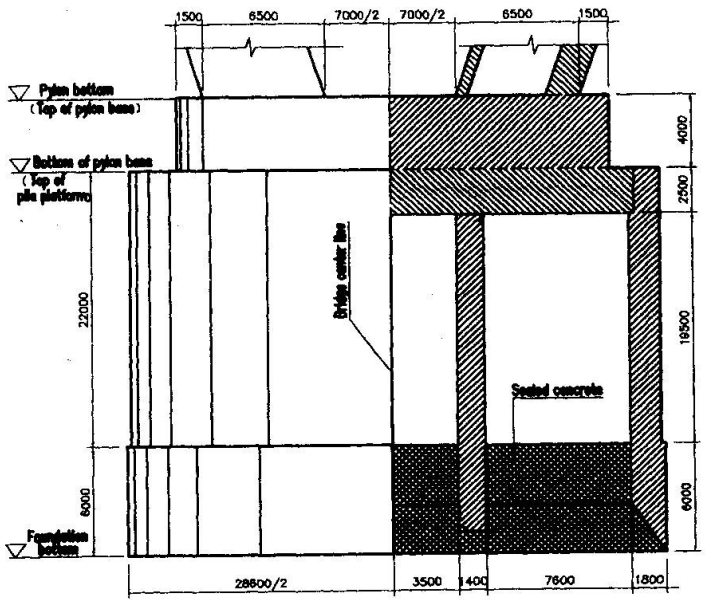

Fig.1: Floated steel caisson foundation

3.1.2 Cast-in-situ bored pile foundation with double- walled cofferdam

The success of cast-in-situ bored pile foundation with double-walled cofferdam depends on the

stability of the cofferdam while landing on the riverbed. According to the geological conditions, the double-walled steel cofferdam shall insert into certain depth of the hard clay layer. So the cofferdam is rather high. Except large steel amount consumption, the self weight of the foundation and the watertight sealed concrete will be added to the piles as permanent exceptional loads. Therefore, this foundation type is not cost-effective in the situation of soft rock with relatively lower bearing capacity as for this bridge. The scheme can only be realized by separating the cofferdam and the sealed concrete from the pile groups. It is very hard to ensure the efficiency of the above-mentioned measures. Once they are failed, unexpected loss will occur. Furthermore, the cofferdam shall insert into certain depth of the hard clay layer in order to maintain stability in construction, which is not efficient in terms of constructional period. It is not adopted. The structure is demonstrated in Figure 2.

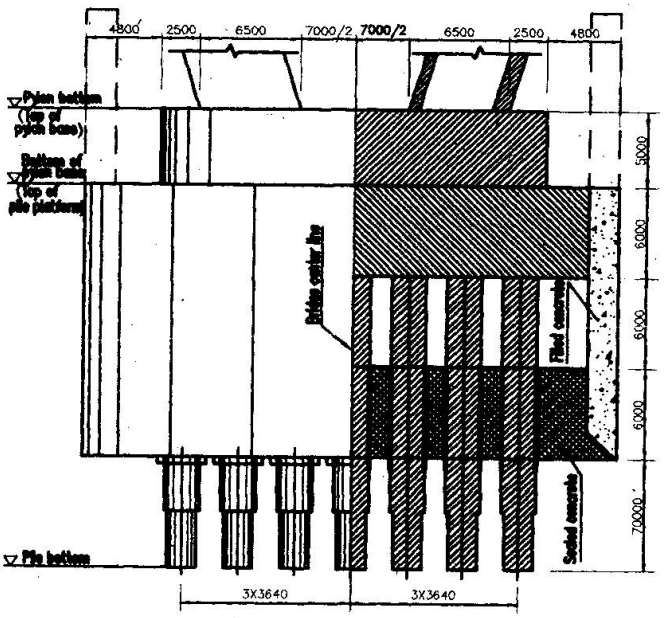

Fig.2: Cast-in-situ bored pile foundation with double-walled cofferdam

3.1.3 Cast-in-situ bored pile foundation with suspended box cofferdam

A cast-in-situ bored pile foundation with suspended box cofferdam also acts as water resistant facility. It is feasible as long as its height can meet the structural requirements. Its watertight sealed concrete is relatively thinner and therefore the exceptional loads added to the pile foundation is much lighter, which is rather beneficial for the soft bedrock. It is shown in Figure 3.

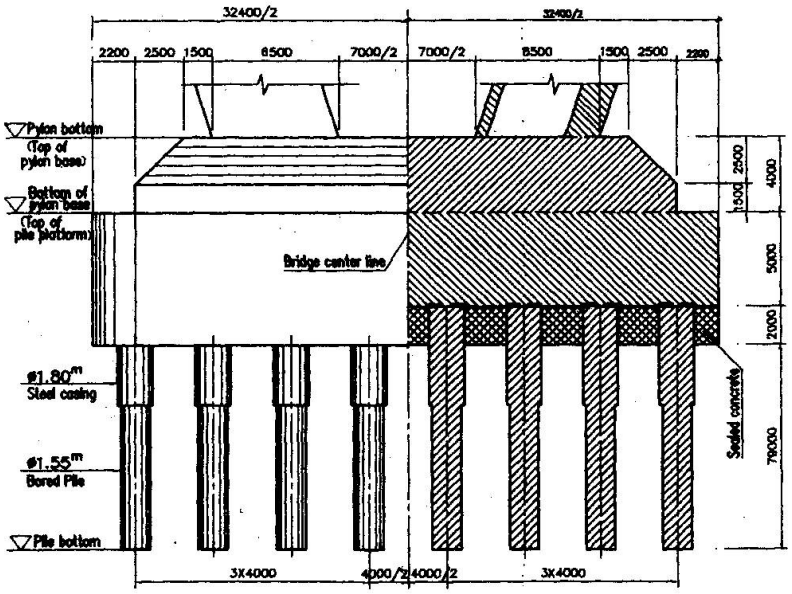

Fig.3: Cast-in-situ bored pile foundation with suspended box cofferdam

3.2 Comparison of constructional methods

3.2.1 Construction of floated steel caisson foundation

Floated steel caisson in deep water consists of well-developed constructional techniques as fabrication, flotation, connection sinking, ejection sinking and other auxiliary measures, among

which the most significant is how to go through the thicker hard clay layers. According to previous experience, it might be possible to go through the hard clay layers with high pressure jetting, local explosion and other assisted methods. But it is hard to maintain the time requirements of the project. Since it shall be prepared after flood season and commenced in dry season. Otherwise, the construction period will be even longer and it is difficult to assure the safety of the project during flood season.

3.2.2 Construction of cast-in situ bored piles with double-walled cofferdam

Construction of cast-in situ bored piles with double-walled cofferdam also requires fabrication, floatation, connection and ejection sinking . But, the cofferdam is only needed to insert certain depth of the hard clay layers. It still must be prepared after flood season and commenced in dry season, whose constructional time is restrained. Moreover, since the bearing capacity of the bedding ground is not strong enough, more exceptional loads and more piles are required, which will also lengthen the constructional time. This method is not economical, too.

3.2.3 Construction of cast-in situ bored piles with suspended box cofferdam

Regarding the actual hydrological and geological conditions at the two piers, the cast-in situ bored piles with suspended box cofferdam is very appropriate. Since average annual water level ranges from 14.0m to 18.0m,. And according to the structural calculations, the elevation of the bottom of the pile platform is 6.0m if the sealed concrete can be cast in dry seasons, the water head difference is therefore 8.0m~12.0m. Hence, the solution is feasible. Geologically speaking, the steel casing need only to be inserted into certain depth of the hard clay layer. With relatively higher anti-scouring capability of this layer, the local scour can be eliminated if an elevated platform is used with a suspended box cofferdam. The local scour elevation under the is about -10.0m according to the calculations, so the assumption of an elevated platform is acceptable.

The cast-in situ bored piles with suspended box cofferdam can be constructed in three ways in compliance with different construction schedule requirements. In the following three methods, the construction platform shall only be higher than the maximum flood elevation in order to proceed construction during flood seasons, which is obviously beneficial to the time schedule.

The first method is that the steel casing used for the protection of the pile boring also behaves as support of the construction platform, which shall be commenced at early dry seasons to finish four to six piles before the arrival of the spring flood to assure stability and safety. In this method, fixing piles are avoided to save unnecessary cost.

In the second method, the steel casing also behaves as support of the construction platform, but construction shall begin during dry season. After the first 4~6 casings have been finished, a small

temporary construction platform is assembled immediately. As soon as the corresponding 4~6 piles are completed, the temporary platform is dismantled. The construction of the rest steel casings is advanced, followed by assembly of construction platform and construction of bored piles. The whole process shall be well arranged to guarantee each step is finished at time. In spite of its risk, it is still very economical.

The third method can be applied at any time theoretically. But it must be undertaken carefully in flood season to eliminate risk. Fixing piles are driven firstly to support the construction platform which shall meet the flood protection requirements. Then the construction platform is assembled and the steel casings are inserted to construct cast-in-situ bored piles. The method is safe and reliable and less restrained by flood. It is more expensive due to the introduction of fixing piles.

As a result of the above mentioned comparison, a cast-in-situ bored pile foundation with suspended box cofferdam is selected. As to suitable method in construction, it must be chosen in accordance with the construction schedule and building machinery and etc.

4 SELECTED FOUNDATION TYPE

Finally, the cast-in-situ bored pile foundation with suspended box cofferdam is used for this project. Each has 40 bored piles of ∅1.55m which are arranged in matrix shape of five rows and eight columns. The pile platform is 32.4×20.4m in area and 5.0m in thickness. Bored piles are 79.0m long below the 2.0m thick sealed concrete. The plan size and water elevation of the water resistant cofferdam (Figure 3) is designed by constructional companies.

5 CONSTRUCTION

The construction of the foundations of this bridge began in March, 1997, in which fixing piles are inserted to support the construction platform. By the early September, 1997, both of the forty cast-in-situ bored piles have been finished, which is followed by cofferdam installation, dredging, concrete casting and other sequence according to the construction schedule.

At present, the two pylons are under construction.

Design of River Piers for the Second Peace Bridge

John STEPHENSON
Structural Engineer
Delcan Corporation
Toronto, ON CANADA

John Stephenson, received his B.Eng. and M.Eng. degrees from McMaster University, Hamilton, Canada. John has played a key role in the design, seismic assessment and seismic retrofit of several bridges in Canada and the United States.

Tim WRIGHT
Manager - Structures
Delcan Corporation
Toronto, ON CANADA

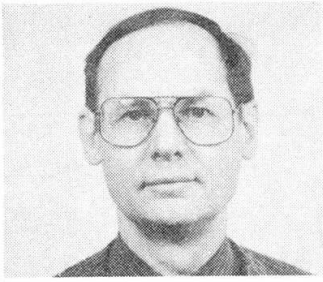

Tim Wright received his B.Sc. (Honours) in Civil and Structural Engineering from the University of Sheffield, England. Tim has played a central role in the planning, design and construction of numerous bridges and transportation-related structures.

Dave YAEGER
Hydrotechnical Engineer
Delcan Corporation
Toronto, ON
CANADA

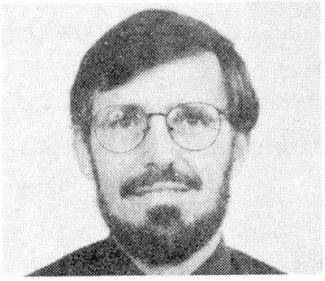

Dave Yaeger is a graduate of the University of Guelph, Canada, with B.Sc. (Engineering) and MSc. degrees. Dave has provided hydrologic and hydraulic analysis of rivers and bridges both in Canada and overseas.

SUMMARY

The Second Peace Bridge, to be completed in 2002, will double the capacity of the existing international Canada/U.S. crossing of the Niagara River, between Fort Erie, Ontario, and Buffalo, New York. The existing bridge, completed in 1926, consists of five steel arch spans crossing the river plus one truss span over the navigable Black Rock Canal on the U.S. side. The new bridge similarly consists of five steel arch spans of identical lengths, plus one large arch span over the canal. The total length of the bridge will be 1064 m. The five river piers were designed by Delcan Corporation, North York (Toronto), Canada. Design was carried out in accordance with the 1997 AASHTO LRFD Code [1] and required careful interpretation of the prescribed load combinations to determine the critical design loadings for the piers. Further, it was necessary to establish acceptable limits on the behaviour of the piers. Design was further constrained by strict hydrological regulations prohibiting increases in the upstream surface profile. With the assistance of detailed finite element flow models, pier geometries were refined and optimized, virtually eliminating backwater effects. The result was a design which meets all structural, environmental, economic and aesthetic criteria. Additional consideration was given to constructability issues as peak flow velocities in the Niagara River (best known for the spectacular Niagara Falls, downstream) can exceed 4 m/s and will present a major construction challenge to the contractor. In this paper, the authors wish to demonstrate that intelligent design cannot be achieved by mere reliance on design codes, but rather on an informed and judicious interpretation of design code clauses, the establishment of acceptable standards of performance and sound engineering judgement.

1. INTRODUCTION

The Second Peace Bridge, to be completed in 2002, will double the capacity of the existing international Canada/U.S. crossing of the Niagara River, between Fort Erie, Ontario, and Buffalo, New York. The existing bridge, completed in 1927, consists of five steel arch spans crossing the river plus one truss span over the navigable Black Rock Canal on the U.S. side. The new bridge similarly consists of five steel arch spans of matching lengths, plus one large arch span over the canal. A general arrangement is shown in Figure 1.

Design of the new Peace Bridge was awarded to an international design consortium consisting of DeLeuw, Cather & Company (Buffalo, NY), Delcan Corporation (Toronto, ON), McCormick Rankin Corporation (Mississauga, ON) and Bettigole Andrews Clark & Killam (Buffalo, NY). One of Delcan's major responsibilities on this project was the design of the five reinforced concrete river piers (Piers 5,6,7,8, and 9).

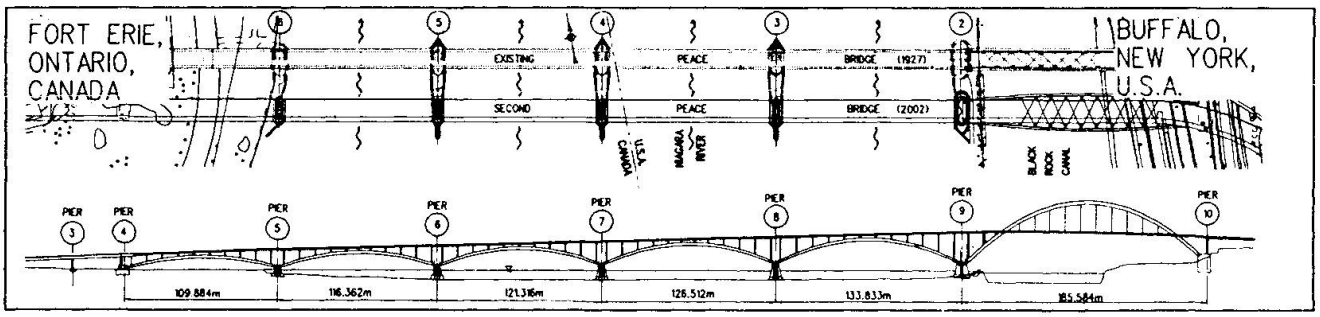

Figure 1. General Arrangement Showing Existing and New (Second) Peace Bridge.

2. INNOVATIVE PIER GEOMETRY

The piers are to be of mass concrete and, like the existing piers, will rest directly on the bedrock at the bottom of the river, with no anchorage into bedrock except for some form of shear keys.

The general layout of the piers was essentially constrained by two factors: (1) the general shape of the piers should be architecturally similar to those of the existing structure; (2) requirements by permitting authorities that the new structure not cause any increase in water elevation levels immediately upstream of the bridge, or hence, in Lake Erie.

Preliminary drawings of the piers called for them to be of equal width (in the longitudinal direction of the bridge) to the piers of the existing bridge. It was recognized, however, that the piers could be made thinner given that the pin separation (between adjacent arches) of 4.0 m was substantially less than the 7.01 to 9.45 m separation on the existing bridge. At the same time, detailed hydraulic computer models prepared by Delcan's hydrotechnical engineers indicated that this preliminary configuration would lead to an unacceptable increase in the backwater effect. Thus, it was decided to reduce the width of the piers to mitigate the backwater effect. This was found to have some beneficial effect on the hydraulic profile, but not enough to satisfy the strict regulations.

The hydraulic modeling indicated that the backwater effects were largely the result of eddy effects between the proposed and existing piers. Delcan proposed an innovative scheme in which the new and existing piers would be linked to provide a single, continuous object around which the river

would flow. As a further refinement, a teardrop shaped tail was added to the rear of the existing piers, much like the trailing edge of an aircraft wing [4]. Revised hydraulic models proved the validity of the proposed link and tail as backwater effects were reduced to near-zero. A typical river pier, including link and tail, is shown in Figure 2.

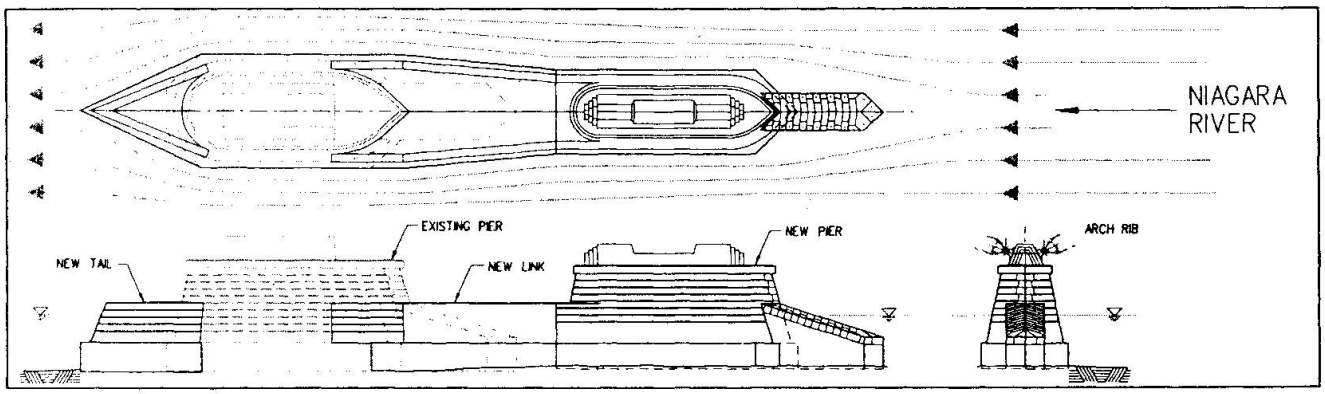

Figure 2. Typical River Pier, Including Link to Existing Pier and New Tail on Existing Pier

3. ESTABLISHMENT OF PERFORMANCE CRITERIA

The AASHTO LRFD Code provides the engineer with a degree of latitude in the design of piers. The only explicit instruction, given by Clause 11.7 is that "[p]iers shall be designed to transmit the loads on the superstructure, and the loads acting on the pier itself, onto the foundation." For the mass concrete piers under consideration, this essentially implies that the piers shall be able to resist sliding and overturning under all relevant combinations of vertical and horizontal loads.

3.1 Sliding

For the pier buoyant self-weight and applied arch forces shown in Figure 3(a), the available sliding friction resistance, $F_R = \mu\ (F_{W,V} + F_{E,V} + W_b)$ must exceed the unbalanced lateral force, $F_L = F_{W,H} - F_{E,H}$, shown in Figure 3(b) Performance under sliding may be expressed as a demand / capacity (D/C) ratio, $D/C = F_L / F_R$, with values less than 1.0 indicating that sliding does not occur.

3.2 Overturning

Similarly, overturning about some arbitrary point, O, will not occur if the available resisting moment exceeds the applied overturning moments, as shown in Figure 3(c). The resisting moment, $M_R = R_V \times d$, is the product of the vertical reaction, $R_V = F_{W,V} + F_{E,V} + W_b$, multiplied by the maximum deviation, $d = w/2 - b/2$, of the reaction from the centreline of the pier; b is the minimum width of the compression block which will just sustain the reaction force without exceeding the compressive strength of the concrete or bedrock. Again, performance may be expressed as $D/C = M_O / M_R$, with values less than 1.0 indicating that there is sufficient overturning resistance.

3.3 Other Criteria

While the sliding and overturning criteria ensure stability of the piers at the ultimate limit state (ULS), it is also desirable to ensure satisfactory day-to-day performance at the service limit state (SLS). After some discussion, it was decided that in order to preserve the integrity of the pier foundation / bedrock interface, the entire interface should remain in compression for all SLS loads. Assuming elastic behaviour at SLS, the net compression stress, σ_{net}, at the extreme edge of the

foundation is equal to $\sigma_{axial} - \sigma_{moment}$, where $\sigma_{axial} = P / A$, and $\sigma_{moment} = M / S$. Negative values of σ_{net} indicate unacceptable uplift. As an additional measure of confidence, a minimum acceptable value of $\sigma_{net} = 0.25\ \sigma_{axial}$ was established.

While the foundation was to be in compression, it was recognized that at other sections (the foundation / body interface, particularly) there may be a light tension field under certain loading conditions. This was deemed to be acceptable, provided that such tensions were well below the concrete cracking strength and would not require special reinforcing treatment.

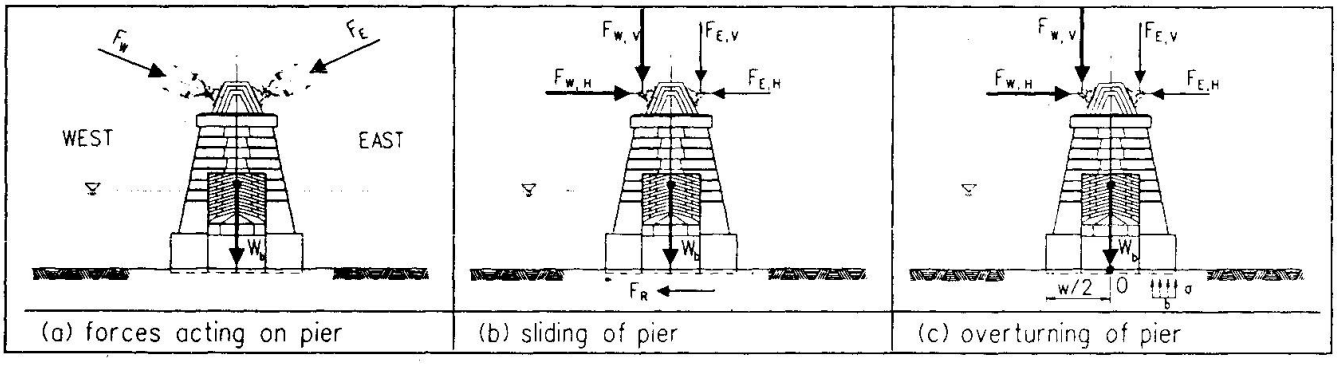

Figure 3. Sliding and Overturning Forces Acting on a Typical Pier

4. RELEVANT LRFD LOAD CASES AND COMBINATIONS

Load cases, factors and combinations were determined, in general, as set out in AASHTO LRFD, Clause 3.4. For each design element under consideration, it was necessary to determine the load combination(s) controlling the design of that element. Of particular interest for the pier design, was the fact that loads are imposed on the pier by arch ribs from adjacent arch spans which are structurally independent of one another. While this presented the possibility that different load factors and combinations could be used for adjacent spans, to produce the most severe loads on the piers, Delcan recognized the need to use sound engineering judgement and to consider the *intent* of the LRFD provisions, to determine conservative, but realistic loads.

First, it was recognized that LRFD ULS combinations typically represent a particular loading event, so its not realistic to use different ULS combinations on adjacent spans (e.g. ULS-III, which represents the instance of very high winds, but no vehicles; this is not compatible with load combinations where live loads are present). Second, whereas load factors for permanent loads, defined in LRFD Table 3.4.1.2, may have high or low values (e.g. 1.25 or 0.90 for dead load), it is not likely that actual permanent loads would be less than their nominal values in one span and greater than nominal in the adjacent span. Indeed, this is recognized explicitly in the LRFD Commentary C3.4.1. Permanent load factors were thus kept constant within a given combination.

Distribution of live loads was of particular importance given the structural independence of the arch spans. That is, the presence of traffic on one span, but not on the adjacent span produces an extreme case of unbalanced thrust on the pier between these spans. While the probability of such an event was believed to be very small, specific situations where this might occur are conceivable (e.g. re-opening the bridge to traffic after a closure) and the decision was made to include this distribution in the applicable SLS and ULS combinations.

6. DETAILED DESIGN

Detailed design of pier reinforcement proceeded in accordance with LRFD Section 5. As with general pier design considerations, LRFD is rather vague regarding reinforcing details for large concrete piers. It is of some interest to note that the piers of the existing bridge are unreinforced below the pier caps, and only lightly reinforced above.

6.1 Pier Foundations

Foundations were found to be primarily in compression and were thus treated as structural mass concrete elements. Nominal shrinkage and temperature steel consisting of 20M bars at 300 x 300 mm spacing was provided in accordance with LRFD Clause 5.10.8.3.

6.2 Pier Bodies and Pier Caps

Pier bodies were initially regarded as compression elements. Strict adherence to LRFD Clause 5.7.3.3.2 requirements for minimum compression reinforcing, however, would have resulted in extreme and unnecessary quantities of vertical steel. Careful consideration of the problem indicated that the typical compression stresses were very low (in the range of 0.4 MPa), and thus, the pier body could best be regarded as a bending element, where light precompression is beneficial [3]. Further analysis showed the maximum tensile stress in the concrete (caused by bending moments) to be in the range of 0.5 MPa, well below the concrete modulus of rupture, about 3.5 MPa. Thus, it was not necessary to provide any more steel than the nominal face steel required for mass concrete.

6.3 Pier Thrust Blocks

Pier thrust blocks were idealized as compact compression elements between the arch bearings. Reinforcing was provided in accordance with LRFD Clauses 5.7.3.3.2, and 5.7.4.6 pertaining to minimum requirements for longitudinal and transverse confining steel. Additional end-hooked vertical bars were supplied to provide complete confinement of the block in three orthogonal directions. These vertical bars also serve to enhance shear transfer from the thrust block to the pier cap, as required under conditions of unbalanced arch thrust loads. Reinforcement for a typical pier is shown in Figure 4.

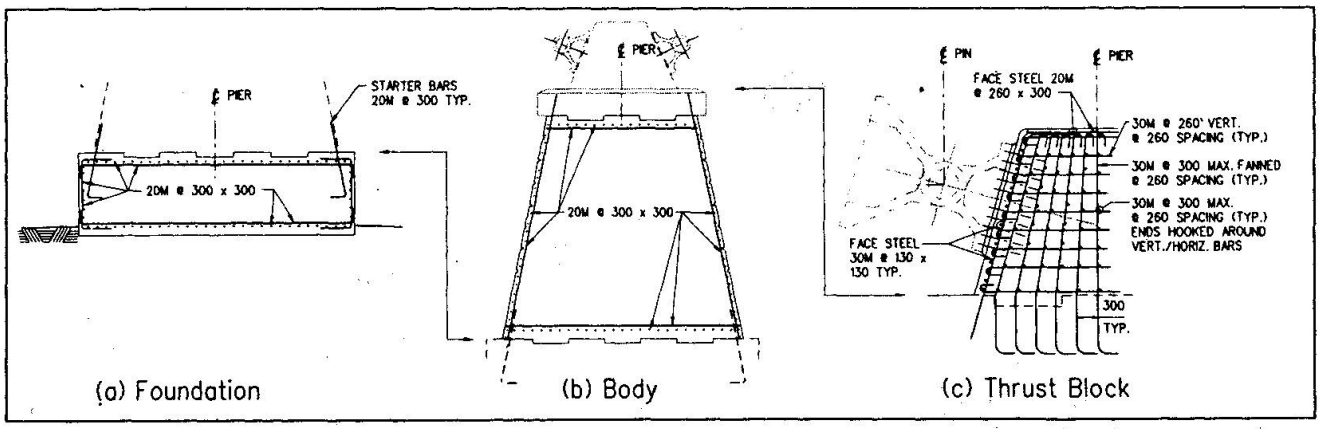

Figure 4. Typical Pier Reinforcement

7. CONSTRUCTABILITY ISSUES

Construction of the piers for the existing structure was performed using pre-fabricated braced timber cofferdams, sheathed in sheet piling and sealed using bag concrete placed by divers. By all accounts [2], placement of the cofferdams was very difficult in the fast-flowing Niagara River. It is anticipated that a refined cofferdam scheme will be used for the construction of the new piers. Delcan's design for constructability addressed a number of issues including the following:

Compatibility With Cofferdam or Alternative Construction Methods - the simple layout of reinforcement, particularly in the foundation and pier body, facilitates the use of braced cofferdams as the design is not particularly sensitive to gaps in the reinforcement required to allow bracing members to pass. Further, should proponent contractors wish to explore alternatives such as "dry-dock" fabrication, necessary modifications to the general design concept may be easily achieved.

Simplicity of Reinforcement Placement - whereas the geometry of the thrustblocks is irregular and changes from pier to pier, it is not necessary to employ complex reinforcement layouts to achieve the desired performance. Reinforcement has been laid out in simple grid patterns to facilitate its placement and to make allowance for the placement of anchor bolts to fasten the pin bearing plates.

8. CONCLUSIONS

The Design of such unique pier structures requires careful consideration, and it is necessary that the engineer have a fundamental understanding of the intent of the applicable design code clauses. With this in mind, Delcan's engineers have produced an efficient design which meets all structural, aesthetic, environmental, and constructability criteria.

The authors look forward to presenting a companion paper on the construction of the piers and bridge after the project goes to construction in the Spring of 1999.

9. ACKNOWLEDGEMENTS

The authors wish to acknowledge the contributions of the following persons: Stephen Mayer, Cliff Elwood (Buffalo and Fort Erie Public Bridge Authority); Keith Harlock, John Baker (DeLeuw, Cather); James Sherlock (McCormick Rankin); Vic Anderson, Hugh Hawk, Ken Herbert (Delcan).

REFERENCES

1. AASHTO, LRFD Bridge Design Specifications, Revised April 1997.
2. CADY, R.W., Buffalo-Fort Erie Bridge Piers Built in Swift Current (from Engineering News-Record, Vol.98, No.16, April 21, 1927).
3. HAWK, H., personal communications, July 1998.
4. LINDSEY, W.F., Typical Drag Coefficients for Various Cylinders in Two Dimensional Flow. NACA Technical Report 619, 1938.