Zeitschrift: IABSE reports = Rapports AIPC = IVBH Berichte
Band: 79 (1998)

Artikel: Seismic behaviour of steel encased reinforced concrete columns
Autor: Wakamatsu, Kazunori / Okamoto, Tatsuo / Sobue, Yukio
DOI: https://doi.org/10.5169/seals-59981

Nutzungsbedingungen
Die ETH-Bibliothek ist die Anbieterin der digitalisierten Zeitschriften auf E-Periodica. Sie besitzt keine Urheberrechte an den Zeitschriften und ist nicht verantwortlich für deren Inhalte. Die Rechte liegen in der Regel bei den Herausgebern beziehungsweise den externen Rechteinhabern. Das Veröffentlichen von Bildern in Print- und Online-Publikationen sowie auf Social Media-Kanälen oder Webseiten ist nur mit vorheriger Genehmigung der Rechteinhaber erlaubt. Mehr erfahren

Conditions d'utilisation
L'ETH Library est le fournisseur des revues numérisées. Elle ne détient aucun droit d'auteur sur les revues et n'est pas responsable de leur contenu. En règle générale, les droits sont détenus par les éditeurs ou les détenteurs de droits externes. La reproduction d'images dans des publications imprimées ou en ligne ainsi que sur des canaux de médias sociaux ou des sites web n'est autorisée qu'avec l'accord préalable des détenteurs des droits. En savoir plus

Terms of use
The ETH Library is the provider of the digitised journals. It does not own any copyrights to the journals and is not responsible for their content. The rights usually lie with the publishers or the external rights holders. Publishing images in print and online publications, as well as on social media channels or websites, is only permitted with the prior consent of the rights holders. Find out more

Download PDF: 25.10.2025

ETH-Bibliothek Zürich, E-Periodica, https://www.e-periodica.ch

Seismic Behaviour of Steel Encased Reinforced Concrete Columns

Kazunori WAKAMATSU
Takenaka Corp.
Osaka, Japan

Tatsuo OKAMOTO
Takenaka Corp.
Osaka, Japan

Yukio SOBUE
Takenaka Corp.
Osaka, Japan

Yasuo HIGASHIBATA
Takenaka Corp.
Osaka, Japan

Yasuyoshi MIYAUCHI
Takenaka Corp.
Osaka, Japan

Summary

The earthquake type loading tests of steel encased reinforced concrete (SRC) columns were carried out. The main objectives of this program were to investigate the seismic behavior of SRC columns using high strength longitudinal bars and lateral reinforcing bars and to obtain guideline for its structural design for high-rise buildings.

1. Introduction

The 1995 Hyogoken-Nanbu Earthquake attacked Kobe on January 17, 1995 and brought us the huge destruction. In general, we have thought that steel encased reinforced concrete (SRC) members have more ductility than reinforced concrete ones have. But in this earthquake, a lot of wide flange encased reinforced concrete columns, especially in multiple dwelling houses, received shear failures. To avoid the shear failure, usage of more slender columns is effective. But, in that case, flexural and shear strength will be short due to the small section. Then, high strength longitudinal and lateral reinforcing bars are considered to be used for slender columns to give more flexural and shear strength. We proposed to use the SD490 (yield strength: 490 MPa, ultimate strength: 620 MPa) as the longitudinal bar, and the KSS785 (yield strength: 785 MPa, ultimate strength: 930 MPa) as the lateral reinforcement for SRC columns. However, the superposed strength method in the SRC Standards published by AIJ is not applicable to such high-strength materials. This paper presents empirical results of tests on prototype columns. The main objectives of this test were to determine the seismic behavior of the column using these reinforcing bars and to obtain guidelines for its structural design for high-rise buildings.

2. Beam-column test

2.1 Test Specimen

Seven column specimens were tested under earthquake-type loadings. The section of concrete(35 ×35 cm, specified compressive strength: 35.3 MPa) and that of cross shaped steel(2H-210×80 ×6×16, tensile strength: 490 MPa) are common to all specimens. The variables are:

1) shear span to depth ratio(M/QD=2.0 and 1.29);
2) area ratio of longitudinal reinforcement (Pt=0.47, 0.65 and 0.74%);
3) lateral reinforcement ratio(Pw=0.23~0.74%); and
4) axial load levels (n) with 0.1, 0.3 and 0.5, where n is calculated by equation (1) and (2).

$$n = N/N_0 \quad (1)$$

$$N_0 = B \cdot D \cdot {}_c\gamma_u \cdot F_c + A_s \cdot {}_s\sigma_y + A_r \cdot {}_r\sigma_y \quad (2)$$

where: ${}_c\gamma_u = 0.85 - 2.5 \cdot {}_sP_c$

${}_sP_c = {}_sa_c/BD$

${}_sa_c$: Total area of compressive steel (cm^2)

N_0 : Ultimate compressive strength (N)

B : Column width (cm)

D : Column depth (cm)

Fc : Specified compressive strength (MPa)

As, Ar : Total areas of steel, longitudinal reinforcement (cm^2)

${}_s\sigma_y$, ${}_r\sigma_y$: Yield strengths of steel, longitudinal reinforcement (MPa)

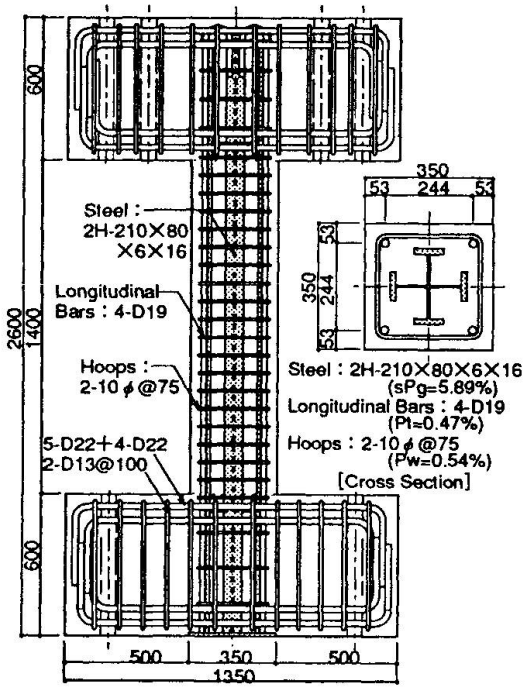

Fig.1 Test Specimen

Table 1 Details of Test Specimens

Specimen		h (mm)	Longitudinal Reinforcement		Lateral Reinforcement		Axial Load Ratio	Qmu (kN)	Qsu (kN)	Qsu/Qmu
			Arrangement	Pt (%)	Arrangement	Pw (%)	n			
M series	1	1400 (M/QD =2.00)	4-D19	0.47	2-10φ@75	0.54	0.3	530	666	1.26
	2						0.5	514	666	1.30
	3		4-D16, 8-D13	0.74	2-10φ@55	0.74	0.3	570	718	1.26
	4						0.1	572	718	1.26
S series	5	900 (M/QD =1.29)	8-D16	0.65	2-6φ@80	0.23	0.3	888	561	0.63
	6				2-6φ@80		0.5	857	561	0.65
	7				2-6φ@40	0.45	0.3	888	712	0.80

h : Inside measurment of column Pt : area ratio of longitudinal reinforcement

Pw : Lateral reinforcement ratio

Axial load ratio : Ratio of axial load to ultimate compressive strength

Qsu : Ultimate shear strength

Qmu = (Mu1+Mu2)/h

Mu1 : Ultimate flexural strength of upper end

Mu2 : Ultimate flexural strength of lower end

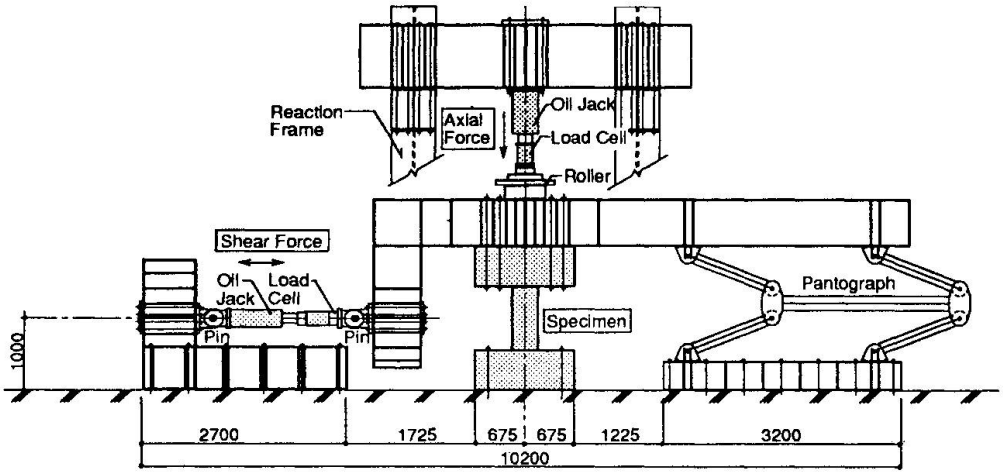

Fig.2 Loading apparatus

Table 2 Mechanical Properties of Concretes

*1 unit (MPa)

Specimen	fc *1	fc' *1	$E_1/_s$fc' (GPa)	ft *1
1~4	35.3	39.0	32.3	3.0
5~7	35.3	38.7	28.5	2.8

fc' : Measured compressive strength of concrete

$E_1/_s$fc' : Secant Modulus of concrete at fc'/3

ft : Measured splitting tensile strength

Table 3 Mechanical Properties of Steel

*1 unit (MPa)

	Thickness (mm)	f_y *1	f_u *1	ε_u(%)
Flange	16	326.0	527.2	27.64
Web	6	372.4	526.4	26.38

f_y : Yield strength of steel

f_u : Ultimate strength of steel

ε_u : Ultimate Strain

Table 4 Mechanical Properties of Steel Bars

Type of Steel Bars		f_y(MPa)	f_u(MPa)	ε_u(%)
Longitudinal Reinf.	Deformed Bar 13mm dia	569.3	699.0	15.43
	Deformed Bar 16mm dia	531.9	710.0	15.99
	Deformed Bar 19mm dia	566.4	771.8	15.95
Lateral Reinf.	High Strength Bar ϕ6mm	870.4	904.2	12.53
	High Strength Bar ϕ10mm	896.6	1096.9	12.30

f_y : Yield strength of steel bars

f_u : Ultimate strength of steel bars

ε_u : Ultimate Strain

The variables and ultimate shear strength of each specimen are as listed in **Table 1**. The full capacities of the specimen 1~4 in M series are determined so as to make them exhibit flexural-type failure mode and those of the specimen 5~7 in S series are determined so as to make them exhibit shear-type failure mode. The mechanical properties of concrete, steel and reinforcing bars are shown in **Table 2,3** and **4**. Cyclic horizontal load is applied to each specimen while the axial load keeping constant. The inflection point is kept at middle height of the column by using testing apparatus, as shown in **Fig.2**.

2.2 Test Results and Discussions

Table 5 gives the test results. **Fig. 3** and **4** show a comparison of measured horizontal load-story drift angle relations and the envelopes of horizontal load-story drift angle relations. The following results can be derived from these table and figures:

M series (specimen 1~4): Specimen 3 shows excellent ductility and lateral load carrying capacity up to the story drift angle exceeding 50×10^{-3}rad. On the other hand, specimen 1,2, and 4 tested under the higher axial compressive load of 30,50% of the ultimate compressive strength behaves in less ductile manner when compared with specimens 3. The failure mode for specimen 3 is flexural failure, and those for all other specimens are flexural compressive failure. The ductility of every specimen is reduced after reaching maximum strength, especially for specimen 2. It seems that this is due to the difference of the axial load levels between specimens. The story drift angles (R_M) at which the maximum lateral loads are sustained vary from 7.0 ~ 12.4×10^{-3}rad. and the ultimate story drift angles (R_U) at which 80% of the maximum lateral loads are sustained vary from 12 ~ 50×10^{-3}rad. The ratios of the measured ultimate strength (V) to the calculated strength by using superpose method[1)] (Vcal) vary from 0.91 ~ 0.94. The strain of the concrete at ultimate compressive strength is 1750×10^{-6} and the yield strains of the longitudinal bars are $2647\sim2922\times10^{-6}$, respectively, and the compressive concrete had crushed before the longitudinal bars yielded. The longitudinal bars maintain the elastic state when the maximum lateral loads are sustained and this might be the reason why the ratios (V/Vcal) of the measured ultimate strength to the calculated one is smaller than 1.0. In case that the ultimate strength is calculated by using

Table 5 Test Result

Specimen		N (kN)	N0 (kN)	n	Maximum Strength			R_M ($\times10^{-3}$ rad.)	R_U ($\times10^{-3}$ rad.)
					Measured V (kN)	Calculated Vcal (kN)	V / Vcal		
M Series	1	2112	7040	0.30	496	530	0.94	10.0	30
	2	3521	7040	0.50	482	514	0.94	7.0	12
	3	739	7392	0.10	534	570	0.94	12.4	50
	4	2217	7392	0.30	521	572	0.91	9.9	40
S Series	5	2162	7207	0.30	599	561	1.07	5.1	15
	6	3604	7207	0.50	617	561	1.10	4.2	12
	7	2162	7207	0.30	651	712	0.91	5.1	30

N : Axial load

N0 : Ultimate compressive strength

V : Empirical value of shear force

Vcal : Smaller one of the two values of shear forces Qmu and Qsu , which are calculated by using superposed method[1)]

R_M : The story drift angle at which the maximum lateral load was sustained

R_U : The ultimate story drift angle at which 80% of the maximum lateral load was sustained

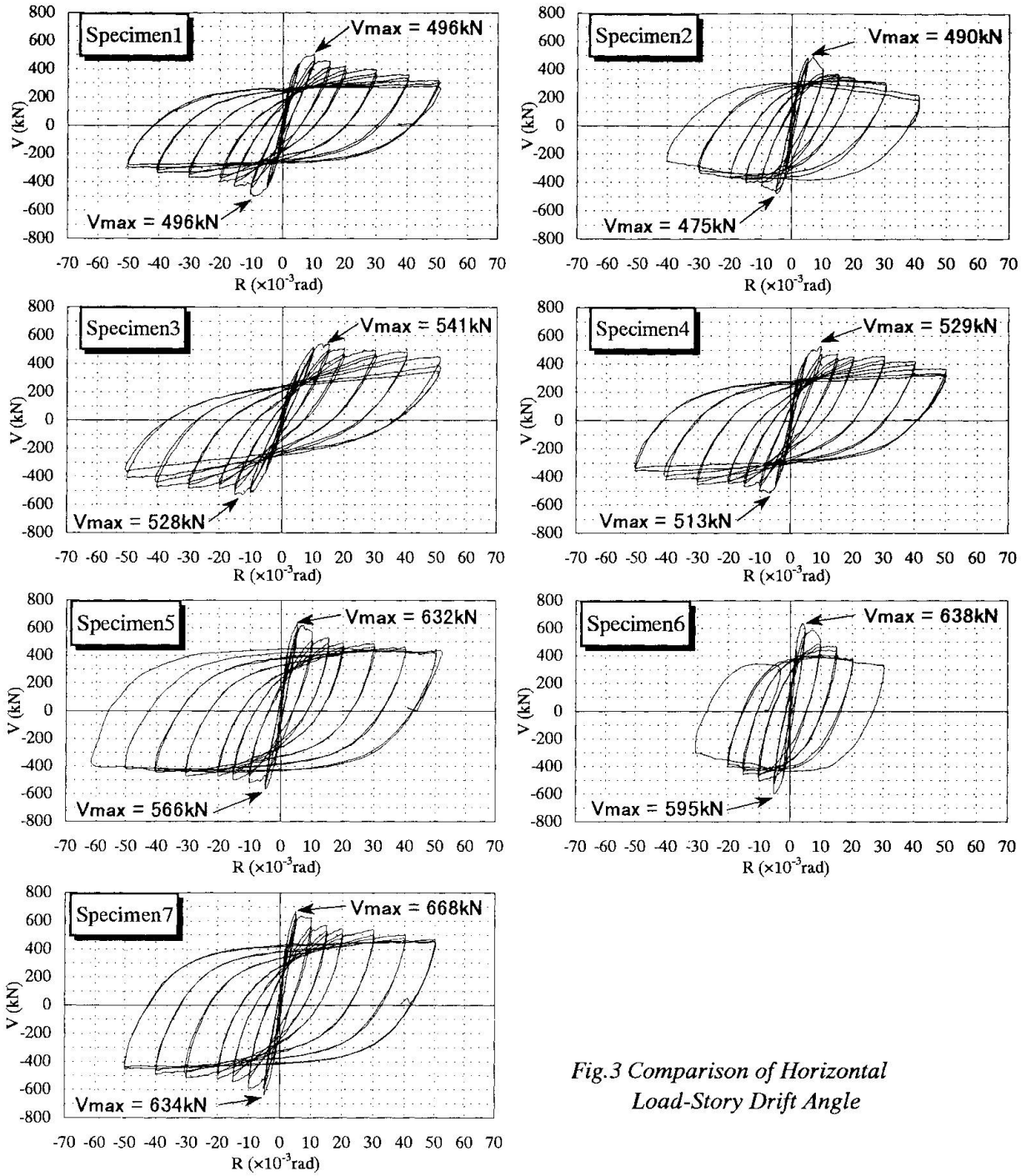

Fig.3 Comparison of Horizontal Load-Story Drift Angle

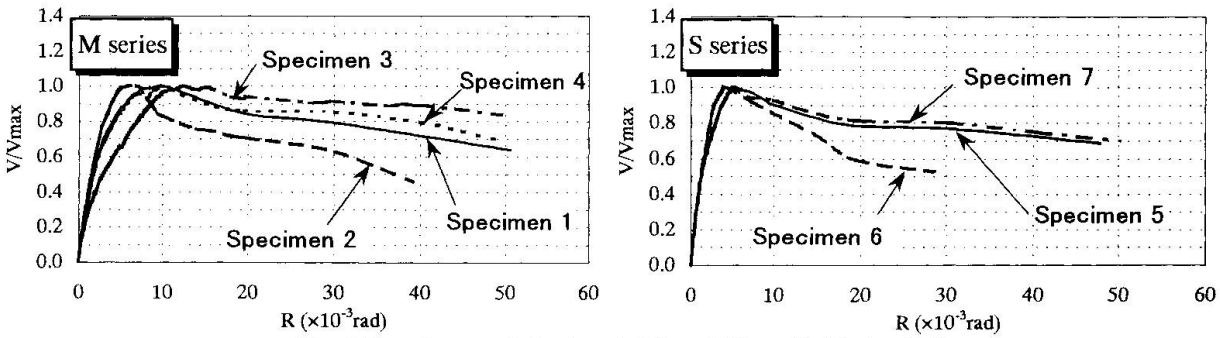

Fig.4 Envelopes of Horizontal Load-Story Drift AngleCurves

the stress of the longitudinal bars when their strains are 1750×10^{-6}, the ratios (V/Vcal) of the measured ultimate strength to the calculated one vary from 1.01 ~ 1.04.

S series (specimen 5~7): The failure mode for each specimen is shear failure. Specimen 5 and 7 show enough ductility and lateral load carrying capacity up to the story drift angle exceeding 5×10^{-2}rad. However, specimen 6 tested under the higher axial compressive load of 50% of the ultimate compressive strength behaves in less ductile manner when compared with specimens 5. It seems that this is due to the difference of the axial load levels between specimens as same as M series. The story drift angles (R_M) at which the maximum lateral loads are sustained vary from 4.2 ~ 5.1×10^{-3}rad. and the ultimate story drift angles (R_U) at which 80% of the maximum lateral loads are sustained vary from 12 ~ 30×10^{-3}rad.. The ratios (V/Vcal) of the measured ultimate strength to the calculated strength of specimen 5 and 6 (Pw=0.23%) are 1.07 and 1.10, respectively, and that of specimen 7 (Pw=0.45%) is 0.91. Therefore, the ratio V/Vcal tends to decrease as lateral reinforcement ratio (Pw) increases. This might be due to the fact that the lateral reinforcing bars maintain the elastic state when the maximum lateral load is sustained.

3. Conclusions

The conclusions obtained from the experimental study are summarized as follows.

(1) The SRC columns using high strength longitudinal bars and lateral reinforcing bars have the same sufficient ductility as those of SRC columns using normal strength ones.
(2) Axial load level influences the flexural ductility of the SRC column.
(3) In this test, the measured ultimate strength of columns using high strength longitudinal bars and lateral reinforcing bars are a little smaller than the calculated strength according to the SRC Standards[1]. To evaluate the ultimate strength of these columns, it is necessary to consider the relation between the strain of the concrete at ultimate compressive strength and the yield strain of the longitudinal bar in case of flexural failure mode, and also the strength balance between concrete and lateral reinforcing bar in case of shear failure mode.

4. References

1) Architectural Institute of Japan, " Standards for Structural Calculation of Steel Reinforced Concrete Structures", 1987.