Zeitschrift: IABSE reports = Rapports AIPC = IVBH Berichte

Band: 79 (1998)

Artikel: High-rise condominium with concrete filled steel tubular column and visco-elastic damper

Autor: Mori, Hiroshige / Kuroki, Yasuo / Kawasaki, Yasuhiro

DOI: https://doi.org/10.5169/seals-59948

Nutzungsbedingungen

Die ETH-Bibliothek ist die Anbieterin der digitalisierten Zeitschriften auf E-Periodica. Sie besitzt keine Urheberrechte an den Zeitschriften und ist nicht verantwortlich für deren Inhalte. Die Rechte liegen in der Regel bei den Herausgebern beziehungsweise den externen Rechteinhabern. Das Veröffentlichen von Bildern in Print- und Online-Publikationen sowie auf Social Media-Kanälen oder Webseiten ist nur mit vorheriger Genehmigung der Rechteinhaber erlaubt. Mehr erfahren

Conditions d'utilisation

L'ETH Library est le fournisseur des revues numérisées. Elle ne détient aucun droit d'auteur sur les revues et n'est pas responsable de leur contenu. En règle générale, les droits sont détenus par les éditeurs ou les détenteurs de droits externes. La reproduction d'images dans des publications imprimées ou en ligne ainsi que sur des canaux de médias sociaux ou des sites web n'est autorisée qu'avec l'accord préalable des détenteurs des droits. En savoir plus

Terms of use

The ETH Library is the provider of the digitised journals. It does not own any copyrights to the journals and is not responsible for their content. The rights usually lie with the publishers or the external rights holders. Publishing images in print and online publications, as well as on social media channels or websites, is only permitted with the prior consent of the rights holders. Find out more

Download PDF: 25.10.2025

ETH-Bibliothek Zürich, E-Periodica, https://www.e-periodica.ch

High-Rise Condominium with Concrete Filled Steel Tubular Column and Visco-Elastic Damper

Hiroshige MORI
Structural Eng.
Konoike Constr. Co. Ltd
Osaka, Japan

Yasuo KUROKI
Senior Eng.
Konoike Constr. Co. Ltd
Osaka, Japan

Yasuhiro KAWASAKI
Mgr
Housing and Urban Dev. Corp.
Osaka, Japan

Kenichi KATAGIHARA
Dir.
Konoike Constr. Co. Ltd
Osaka, Japan

Masakazu OKAMOTO
Senior Specialist
Housing and Urban Dev. Corp.
Osaka, Japan

Summary

At present, a 40 story high-rise condominium is under construction in Osaka, Japan for completion in 1999. One of main features of the structure is that high strength and substantial ductility are secured with cross-tube arranged frames consisting of concrete filled steel tubular columns and steel girders. In the condominium, structural control system with visco-elastic dampers, VED, is employed for improvement of habitability under gusts or typhoons while seismic performance is also enhanced. In order to verify damping improvement effect by the VED, response analysis with time series excitation of wind and earthquake has been performed. In the paper, effect of the VED is clarified by outcome of the response analysis, as well as is peak-cut system which is not to input excessive stress into the surrounding frames.

1. Design Concept

Since the Hyogo-ken Nanbu earthquake on the 17th of January, 1995, how to secure redundancy of earthquake response capability of structural system has become a hot issue in Japan. On the other hand, high-rise building, especially of resident use, needs a capability to decrease uncomfortable vibration. The authors believe that upgrading the viscous damping capacity of building by installing the VED is efficient method to meet the request. Single equipment like Tuned Mass Damper installed at uppermost floor may give improvement of the habitability, but there is a possibility to harm the building in case of unpredictable situation like excessively intense earthquake. Passive system consisting of a large number of small devices which are relatively undersized and easy to exchange, is considered to be safe and the surest technique for securing redundancy of seismic capability and good habitability of high rise building.

2. The building outline

The structural system is mainly cross-tube arranged frames with standard span of 6.5 m by 9.0 m, adaptable for architectural arrangement. The structural frame consists of steel girders and concrete filled steel tubular columns, with reinforced concrete frames and walls under ground. Typical structural plan and

framing elevation are shown in figures 2, 3. The steel tubes of the CFT columns have weld built-up box section with SN490B steel and the girders have weld built-up H-shape of SN490B steel. Girders to columns joints have inside diaphragm and girder brackets fabricated by shop welding. Joints of bracket and girder element are field welding for flange and high strength bolt joint for web. Filling concrete of the CFT column is high flow concrete of 60 N/mm^2 strength for the first through the 12th story and 42 N/mm^2 for higher stories. The arrangement of the VED for each story has been determined not to cause twisting in the plan as well as sudden change of stiffness between stories. Dwelling unit plan, emergency check of the VED and influence of temperature to the VED are also of consideration. In the first through the 19th story, eight VEDs are placed between dry wall sidings in symmetrical arrangement for both axes, and four VEDs are placed as well in the 20th through the 38th story, as shown in figures 2,3.

Figure 1 Persepective

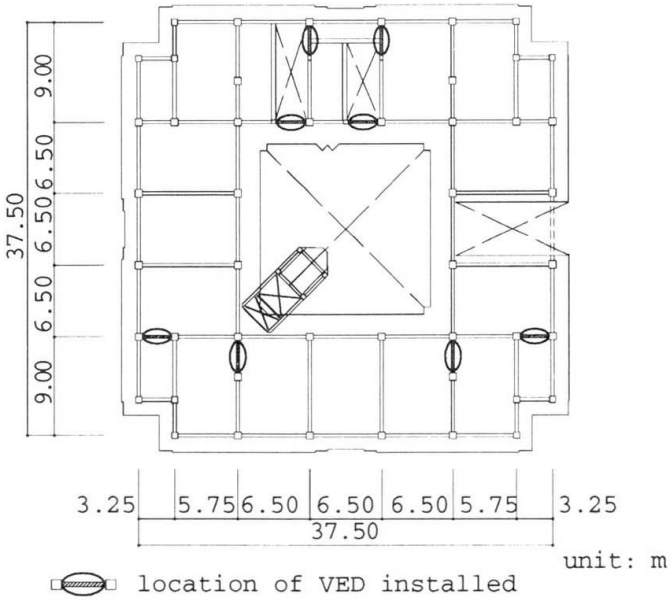

Figure 2 Structural plan, lower stories

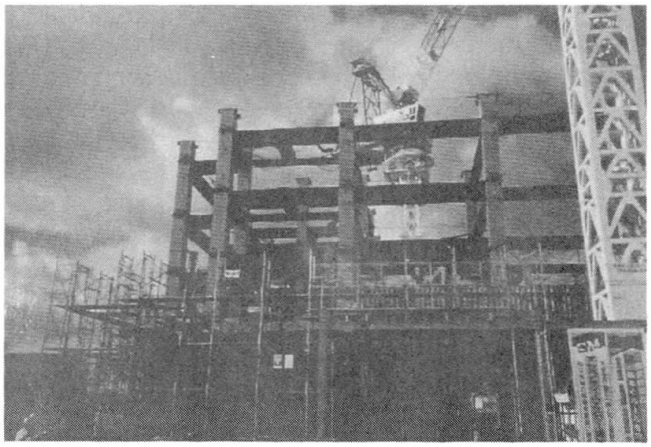

Photo 1 Steel erection of lower stories

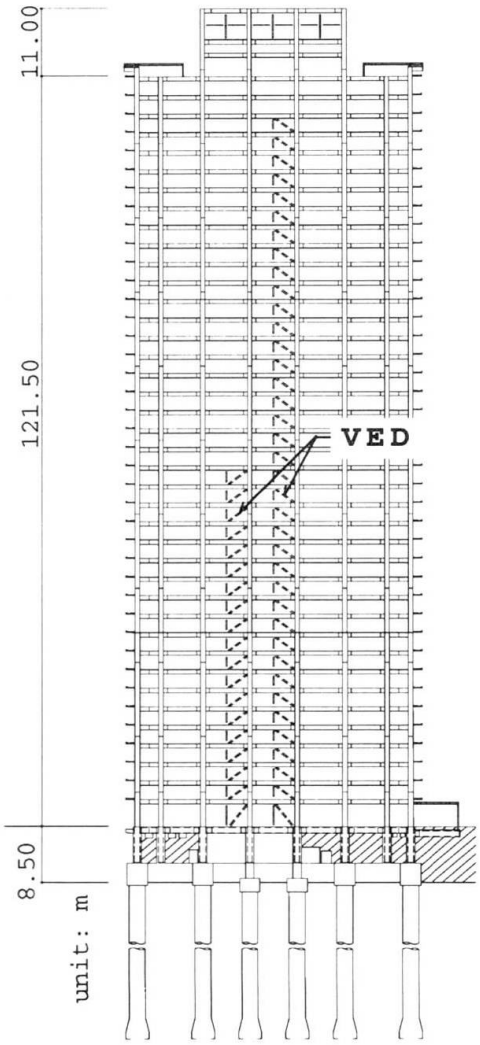

Figure 3 Framing elevation

3. The visco-elastic damper, VED

The VED makes use of hysteretic property of rubber-like visco-elastic substance, VES, when it is subjected to cyclic shear strain. The VED consists of the VES held between five steel sheets as shown in figure 4. From load-shear deformation relationship of experiments, figure 5, it is seen that hysteresis loop of the VED is quite similar to an elliptic from low amplitude to large ones, which suggests that those dampers are possessed of almost linear mechanical properties. When earthquake or gusts occurs, the steel sheets shift causing shear deformation to the VES, which then absorb energy. The property of the VED can be represented by a Voight model. Assuming that the VED has perfectly linear properties, its hysteresis loop becomes an inclined elliptic as shown in Figure 6[1]. The angle between the horizontal axis and the line from the origin to the point where the deformation shows its maximum is defined as equivalent stiffness Keq. Equivalent damping coefficient Ceq then is given as:

$$Ceq = \Delta W / (2 \pi^2 \cdot a^2 \cdot f)$$

where , ΔW , a and f are the area of the hysteresis loop, the amplitude and the frequency respectively. Keq and Ceq are to be corrected for temperature in practical use because of the VES's temperature-dependent property. The temperature correction can easily be performed just by multiplying rigidity and viscosity by temperature correction factors [1]. Because the VED is also velocity-dependent, there may occur excessive force under impulsive

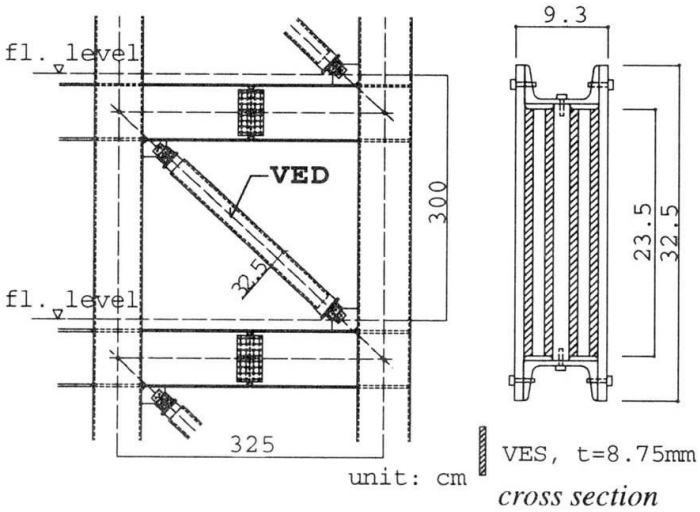

Figure 4 Visco-elastic damper

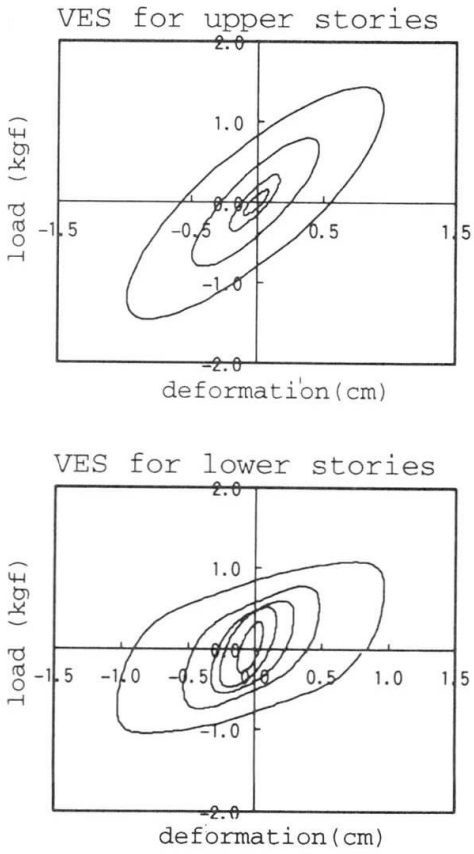

Figure 5 Hysteresis loops of experiment

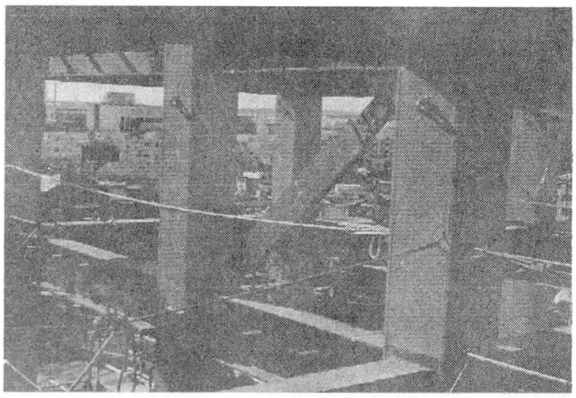

Photo 2 Installation of VED

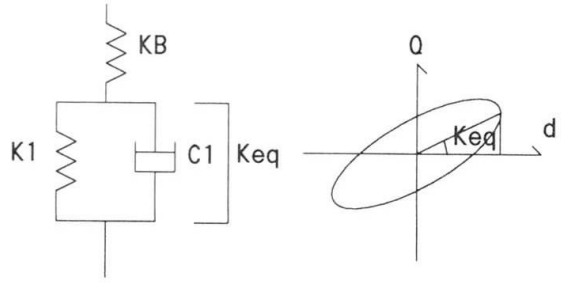

Figure 6 Voight model

input like earthquake excitation. Then the force imposed on the VED is to be controlled by so-called peak-cut system, a set of high strength bolts and slotted holes which is equipped on one end of the VED. It avoids excessive force working on the VED and damaging the surrounding frames.

4. Study of habitability under gusts

4.1 The wind response analysis

To confirm the improvement effect of the habitability under gusts by the VED, wind response analysis has been performed. Wind external force was formed as time series load with experimental data of wind pressure measured in wind tunnel tests. These are for wind direction and orthogonal direction to the wind with condition of wind velocity of one year return period, that is 25.3 m/s at the top of the building, 141.8 m high from neighboring river surface.

The primary natural period of the building is 3.43 seconds of one direction, 3.38 seconds of another direction. Consequently the property of the VES is employed for 3 Hz of frequency. The property of the VES is also for 20 degree, 25 degree and 30 degree in Celsius of temperature, because the monthly average temperature of August through October, when gusts or typhoons usually happen at Osaka, are 28.2 ℃, 24.2 ℃ and 18.3 ℃, respectively [2].

Time-history response acceleration at the uppermost 40th floor is shown in figure 7 for with and without the VED. Root mean square, RMS values of 10 minutes duration for response quantities are employed to evaluate, because shake or vibration of building perceived is considered to be related to response quantities of a certain duration rather than a momentary response. The RMS values of the response acceleration with the VED installed are decreased about 20% and 35% for 30 ℃ and 20 ℃ respectively, compared with the response acceleration without the VED.

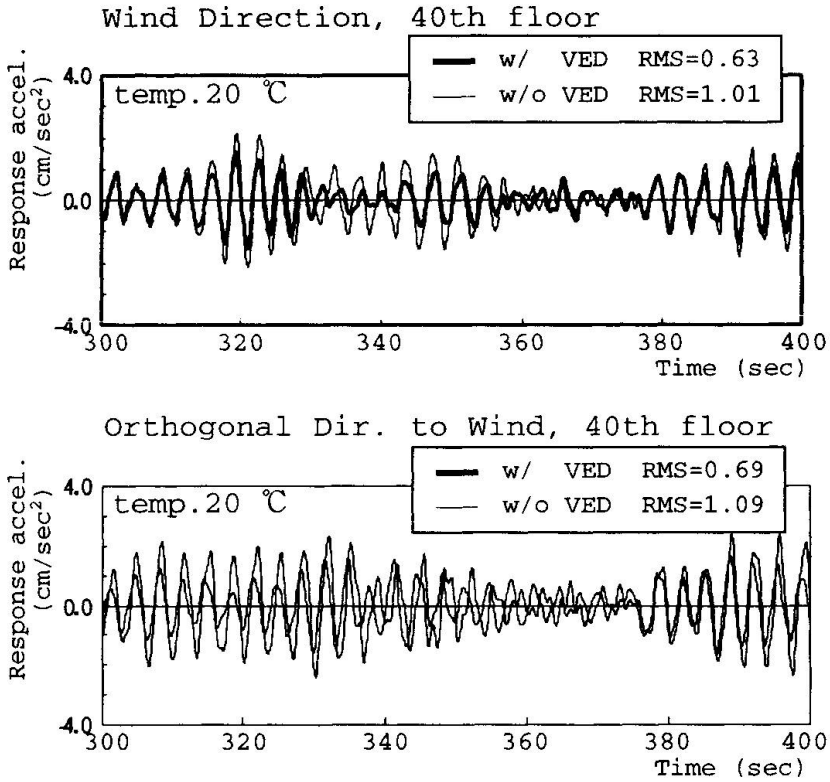

Figure 7 Response acceleration at the 40th floor

Table 1 Equivalent damping with the VED

	20··	25··	30··
heq (wind dir.)	3.4 %	2.3 %	1.9 %
heq (orthogonal dir. to wind)	5.0 %	3.0 %	2.0 %

Including original structural damping of 1 %

The response analysis has been performed also for solely structural model without the VED but of series of structural damping factor changed from 1% through 6%, where original damping factor of the structure itself is assumed 1%. With comparing the outcome of the damping factor series with the outcome of the VED installed, damping effect of the VED is estimated to be equivalent with 1% to 4% of structural damping factor, as shown in Table 1.

4.2 Evaluation of habitability

Evaluation of habitability under gusts of one year return period has been worked on the uppermost 40th floor according to official recommendations [3]. Response acceleration are estimated by a method of a

guidelines [4] rather than the outcome of the response analysis, and equivalent structural damping in Table 1 are employed for the evaluation.
Evaluation chart is shown in Figure 8. The structural control effect of the VED is conspicuously expressed both in the wind direction and the orthogonal direction to the wind, meeting rank II and rank III. It confirmed that it met rank III even in case of 30 ℃ temperature which is the most unfavorable condition in viewpoint of temperature-dependent property of the VES. The performance about habitability indicates almost equal to the one of the same scale reinforced concrete structure.

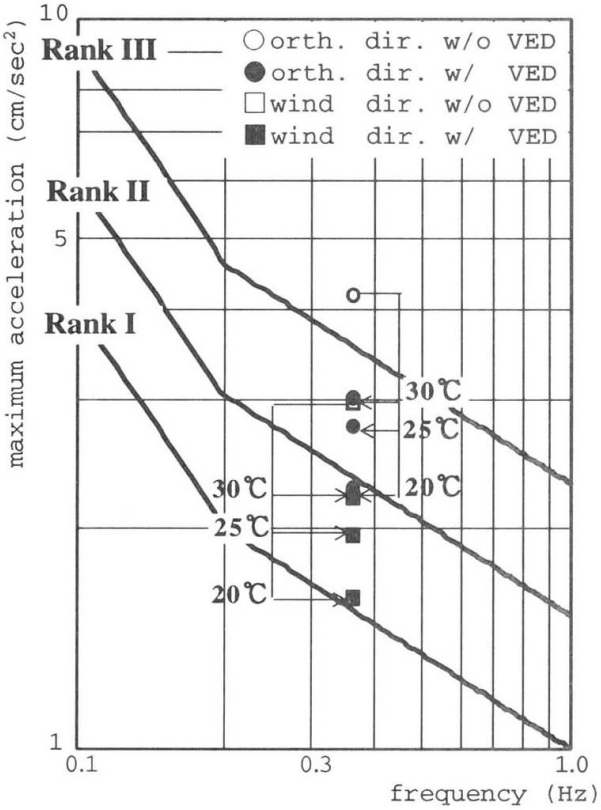

Figure 8 Evaluation of habitability

5. Behavior of earthquake response

5.1 The peak-cut system

It provides so-called peak-cut system, a set of high strength bolts and slotted holes which is equipped on one end of the VED, in order to avoid excessive force occur in the VED in case of intensive earthquake. Load and deformation relationship of dynamic shear loading tests for 16mm diameter high strength bolts, M16, is shown in Figure 9. The maximum load at friction slip shows the value which is about 75 % of design load for the conventional friction joint with normal bolt hole, while the hysteretic loop shows rigid-plastic behavior. Therefore, combination of the Voight model (Keq and C1) and rigid-plastic bi-linear model (K_B) for the VED as shown in figure 6, is employed in the earthquake response analysis.

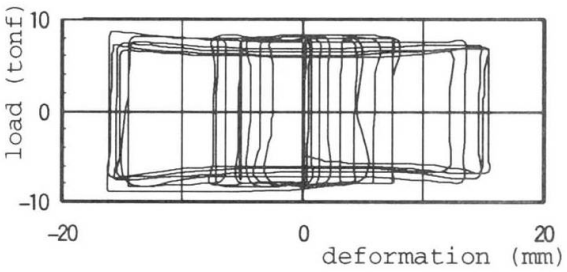

Figure 9 Dynamic behavior of peak-cut system

5.2 Earthquake response analysis

In order to clarify earthquake response behavior due to the installation of the VED, response analysis have been performed for maximum ground velocity of 25 cm/sec as Level I and of 50 cm/sec as Level II. Earthquake records are El Centro NS 1940, Taft EW 1952, Hachinohe NS 1968 and TKMF061 1995. TKMF061 is a site record of another Housing and Urban Development Corp. condominium, about 2 km apart from the concerned site, obtained at the time of the Hyogo-ken Nanbu earthquake on January 17, 1995. The temperature is specified to be 20 ℃ as the year average temperature at Osaka. The response quantities of the analysis shows about 10% decrease for Level I and about 5% decrease for Level II by the VED in overall view. The response for the TKMF061 solely is shown in Figure 10, conspicuously representing decrease of response quantities for each floor uniformly due to the VED. The time history of force-deformation relationship of a VED installed in the 10th story is shown for Level II earthquake in Figure 11. It is clearly recognized that excessive force working on the VED should be avoided and undesirable influence onto the surrounding frames are controlled by the peak-cut system.
The maximum shear strain of the VED and maximum slip deformation of the peak-cut system under Level II earthquake are shown in Table 2. The maximum shear strain of the VED are 100% through 160 % and is in

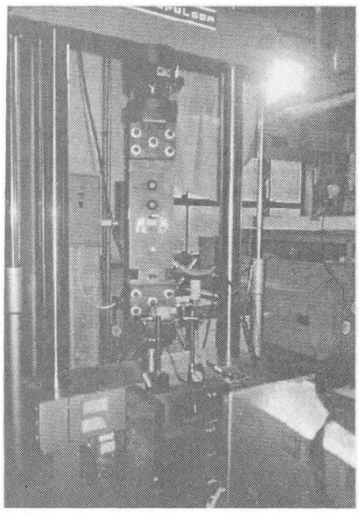

Photo 3 Experiment of peak-cut system

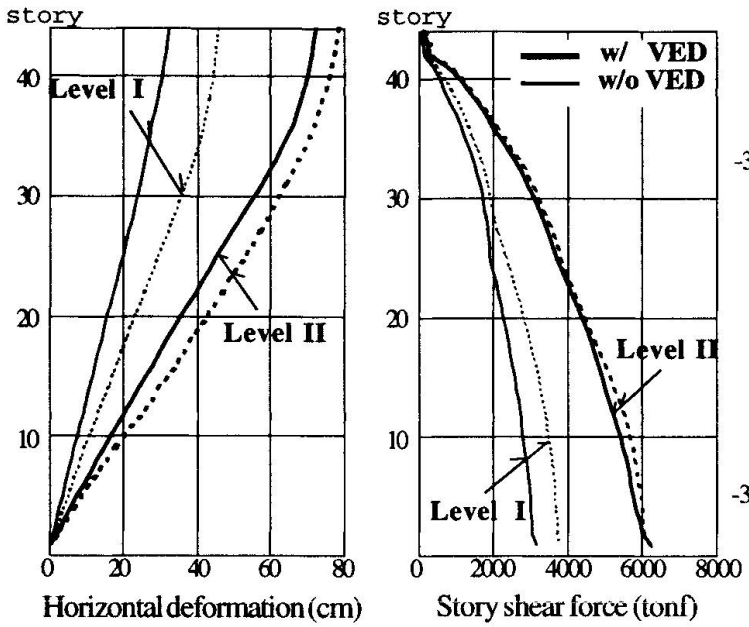

Figure 10 Earthquake response

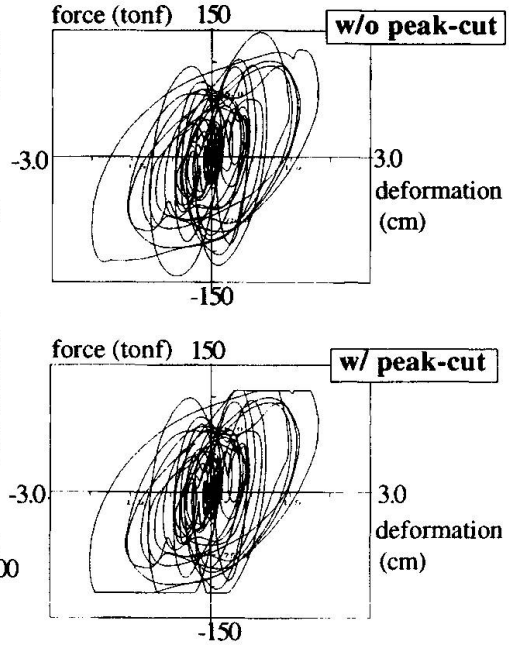

Figure 11 Response of the VED

Table 2 Response strain and deformation

	10th story	20th story	30th story	38th story
Maximum shear strain of VES	101 %	159 %	158 %	132 %
Maximum slip deformation of peak-cut system	0.69 cm	0.18 cm	0.62 cm	0.50 cm

the range of stable behavior of the VES experiment result, that is, the elliptic loop remain linear mechanical properties. The maximum slip deformation of the peak-cut system shows approximately 0.7 cm indicating a design detail for 1 cm or more slip deformation to be required. The detail in the VED actually installed in the building is designed as adequate for 3 cm slip in both direction.

6. Conclusions

The VED has already been used for vibration control in the skyscrapers in the U.S., since 30 years ago and has results applied in a large number of buildings. Recently, research and development has moved for feasible use in seismic retrofit of conventional reinforced concrete structures, and the number of practical use has increased in Japan. The VED has its particular property of energy dissipation capability for every magnitude of amplitude, while it is easily manufactured resulting in low cost. Manufacturer of the VES are carrying forward the development of substances with higher damping and less temperature-dependent property. Two kinds of the VES which are newly developed by different manufactures should be used in the concerned building. The building is now under construction for completion in June of 1999. Measurement system in the building consisting of seismometers, wind observation devices and VED measurements, is expected to clarify furthermore the behavior of the structure and the VED.

References

[1] Satsuya Soda, Jyun-ichi Wada et. al., Visco-Elastic Damper: Cyclic Loading Test to Construct Mechanical Model, Journal of Struct. Constr. Engng., Architectural Institute of Japan, No. 457, Mar., 1994 [in Japanese]
[2] The science chronological table, Japanese national observatory volume, 1994 edition [in Japanese]
[3] Recommendations for Loads on Buildings, AIJ, 1993 edition [in Japanese]
[4] Guidelines for the evaluation of habitability to building vibration, AIJ, 1991 edition [in Japanese]