Zeitschrift: IABSE reports = Rapports AIPC = IVBH Berichte
Band: 79 (1998)

Artikel: The Ting Kau Bridge in Hong Kong
Autor: Bergermann, Rudolf / Schlaich, Michael
DOI: https://doi.org/10.5169/seals-59902

Nutzungsbedingungen
Die ETH-Bibliothek ist die Anbieterin der digitalisierten Zeitschriften auf E-Periodica. Sie besitzt keine Urheberrechte an den Zeitschriften und ist nicht verantwortlich für deren Inhalte. Die Rechte liegen in der Regel bei den Herausgebern beziehungsweise den externen Rechteinhabern. Das Veröffentlichen von Bildern in Print- und Online-Publikationen sowie auf Social Media-Kanälen oder Webseiten ist nur mit vorheriger Genehmigung der Rechteinhaber erlaubt. Mehr erfahren

Conditions d'utilisation
L'ETH Library est le fournisseur des revues numérisées. Elle ne détient aucun droit d'auteur sur les revues et n'est pas responsable de leur contenu. En règle générale, les droits sont détenus par les éditeurs ou les détenteurs de droits externes. La reproduction d'images dans des publications imprimées ou en ligne ainsi que sur des canaux de médias sociaux ou des sites web n'est autorisée qu'avec l'accord préalable des détenteurs des droits. En savoir plus

Terms of use
The ETH Library is the provider of the digitised journals. It does not own any copyrights to the journals and is not responsible for their content. The rights usually lie with the publishers or the external rights holders. Publishing images in print and online publications, as well as on social media channels or websites, is only permitted with the prior consent of the rights holders. Find out more

Download PDF: 25.10.2025

ETH-Bibliothek Zürich, E-Periodica, https://www.e-periodica.ch

The Ting Kau Bridge in Hong Kong

Rudolf BERGERMANN
Consulting Eng.
Schlaich Bergermann und Partner
Stuttgart, Germany

Michael SCHLAICH
Consulting Eng.
Schlaich Bergermann und Partner
Stuttgart, Germany

Summary

The Ting Kau bridge is one of the trio of long span bridges which connect Hong Kong´s new Chep Lak Kok airport, located on Lan Tau island some 30km away from Hong Kong, to the city and the main land. It is a multispan cable stayed bridge with 1177m of cable supported deck. The unusual features of the bridge are its two adjacent main spans with stabilising cables for the central main tower which run diagonally from its top towards the deck of the side towers. With further stabilising cables in the transverse direction, the towers of the bridge appear like masts of a sailing boat. The „Design and Build" contract for the Ting Kau bridge was awarded in August 1994 and the bridge was opened to traffic in April 1998. The design of the structure will be introduced here and the process of deck erection and analysis will be described.

1. Introduction - Conceptual design

The bridge crosses the 900m wide Rambler channel, one of the main water ways to Hong Kong´s container port. Therefore the number of supports in the water, which require costly ship impact protection was to be minimised. While generally the level of bed rock in the channel is about 40m below water, approximately in the middle of the channel there is an underwater „hill" of less than 30m depth. This fortunate fact offered the opportunity to design a bridge with a central tower in the channel and two lateral ones on land (see elevation in fig. 1).

Further boundary conditions for the design were the extremely strong winds in Hong Kong and the short construction time. To offer the least resistance to typhoon winds (up to 95m/s according to the specifications) monoleg towers with aerodynamically favourable shapes were chosen. The towers separate the deck into two carriageways with a central gap. The slender deck with a width to height ratio of 25 also follows the design criteria of reduction of wind resistance. The towers and the deck were designed for fast construction. The towers are composed of three segments with constant cross sections to permit slipforming. The composite deck made of prefabricated steel grids and precast concrete panels was trial assembled on the ground which allowed deck erection in record time.

The basic challenge of a multispan cable stayed bridge is the stabilisiation of the central main tower, which contrary to the towers of a conventional cable stayed bridge cannot be connected by backstays to a fixed point such as an abutment. This is especially problematic during balanced cantilevering erection of the deck. Longitudinal stabilising cables which diagonally connect the top of the main tower to the deck at the side towers were introduced already during construction. They fulfill the function of backstay cables, by reducing the displacements of the main tower due to unsymmetric live loads and wind induced oscillations.

2. Structural design

Ting Kau bridge has a deck of 1177m length consisting of four spans of 127, 448, 475 and 127m length respectively.

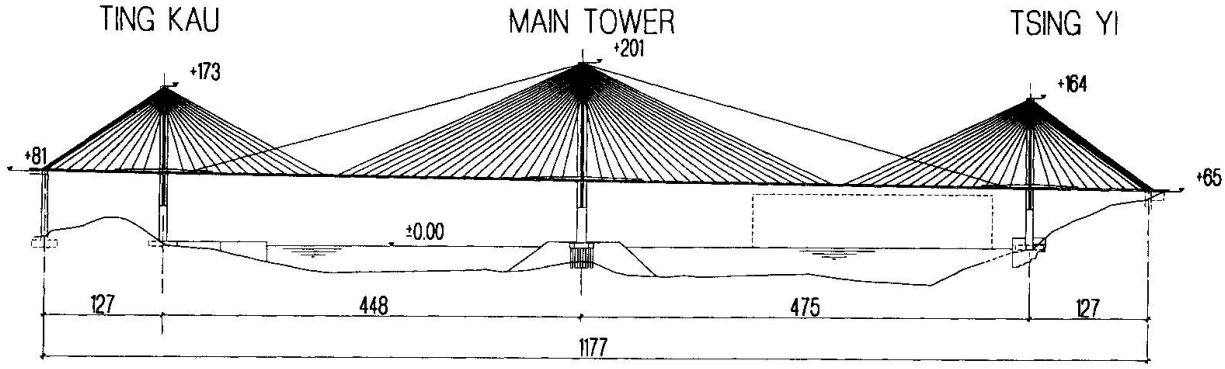

Fig. 1 Elevation

The three towers of concrete grade 60 reach heights of up to 201m and consist of three segments, each of constant cross section. The very slender segment above the deck, which is minimised for reasons of wind resistance and also to keep the gap between the carriageways within reasonable limits, is stabilised by transverse cables. These cables are spread by steel struts which are connected to the middle segment underneath the deck. This segment has to carry additional horizontal loads introduced by the deck and is therefore increased in size. Since for reasons of ship clearance no stabilising cables could be connected to the bottom of the tower, the lowest segment is the strongest. While the two lateral towers are supported directly on rock by pad foundations, the main tower is supported by 52 bored piles each with a diametre of 2.5m. To give stability to the piles and and to protect the tower from ship impact, an artificial island was designed.

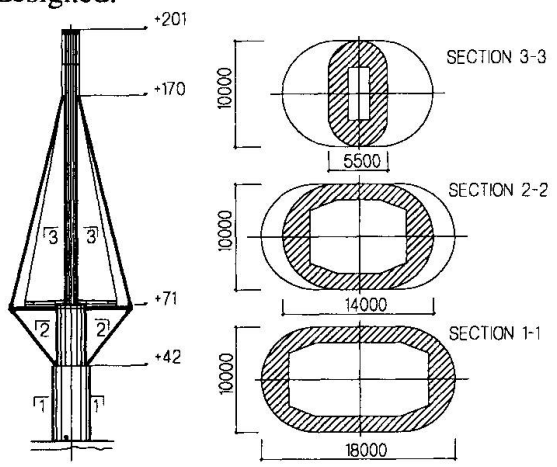

Fig. 2 Main Tower

Four cable planes support the carriageways of the deck. The cables consist of bundles of 17 to 58 monostrands. They are anchored in steel boxes which are connected to the sides of the tower tops. Theses boxes, up to 30m long and weighing up to 200 tons, connect the horizontal components of the cables and introduce their vertical components via steel brackets and posttensioned bars and loop tendons into the concrete ot the towers.

The two carriageways of the composite deck are separated by a gap of 5.2m width. They are generally 18.77m wide and each carry 3 traffic lanes and a hardshoulder. Every 13.5m, the distance between cables, they are connected by steel cross girders. The steel grids, made of steel grade S355JO, which carry the deck slab, consist of L-shaped longitudinal main girders and I-shaped cross girders which are spaced 4.5m. Usually grids of 13.5m length were prefabricated on the ground by welding and connected to the existing deck by spliced connections with high strength friction grip bolts (M30, grade 8.8). The deck slab consists of precast panels of concrete

grade 60 which span the 4.5m from cross girder to cross girder. Their thickness is normally 24cm and increases to 30cm around the main tower. Such a composite deck for a cable stayed bridge permits fast and easy assembly, since the use of formwork and reinforcement on site is reduced to a minimum. Another advantage is that the concrete can be used to carry the horizontal components of the cables, which at the same time prestress the concrete. Also it should be noted that the use of „old" precast panels can greatly reduce the effects of creep and shrinkage.

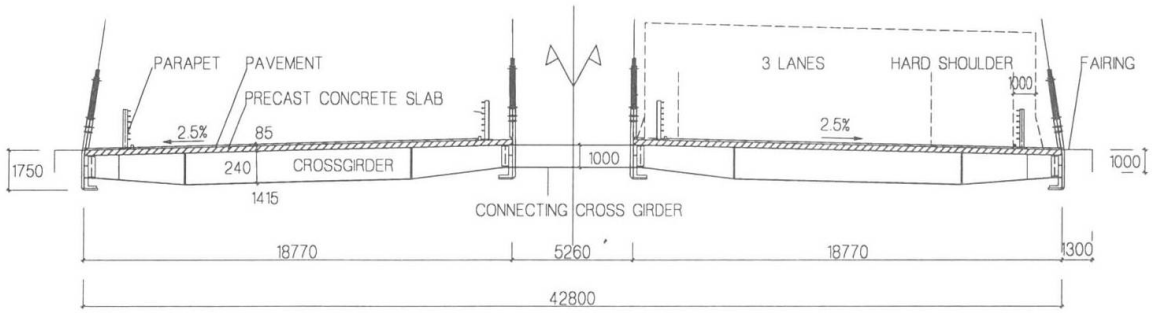

Fig. 3 Deck, typical cross section

For further details of the conceptual and structural design of the Ting Kau bridge, please refer to [1], [2] and [3].

3. Deck Erection

The deck of the Ting Kau bridge was erected by the balanced free cantilever method. Firstly, heavy lifting equipment was hoisted to the tower tops and the steel tower heads were positioned. Then at each tower deck erection began with the positioning of the starter grids, which are about 50% longer than the standard grids. They were manoeuvered into a vertical position at the tower foot, hoisted, attached and then lowered into their horizontal position (see fig. 4). After the precast concrete slabs were placed and cast in, stiff leg derrick cranes were assembled on the starter grids and the standard deck erection cycle began.

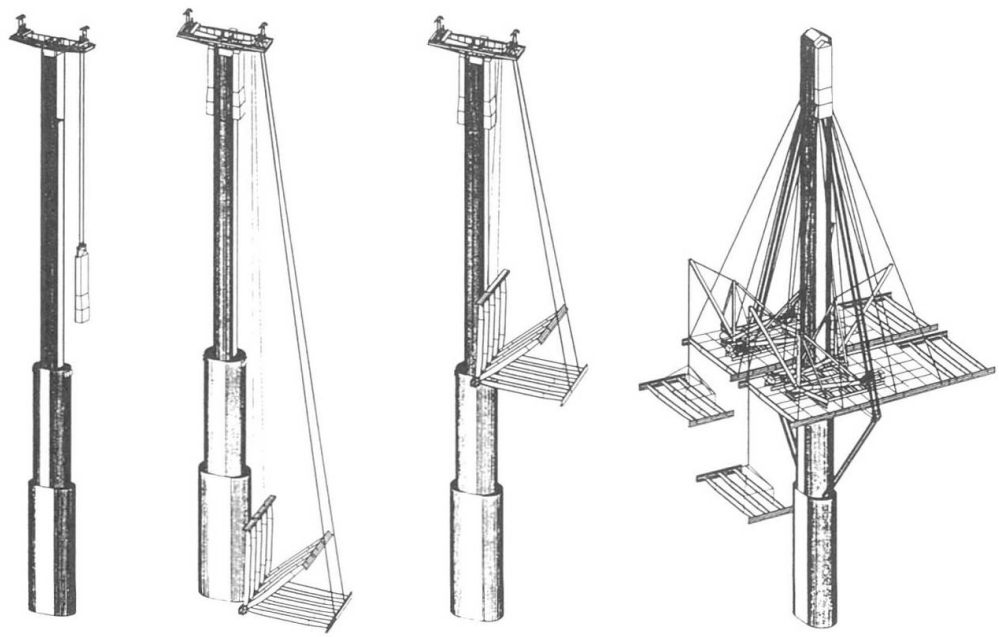

Fig. 4 Deck erection sequence (taken from [3])

The typical erection cycle for a grid was defined by four stages:

1. steel stage: two prefabricated welded steel grids each consisting of 2 longitudinal main girders with a cable anchorage at their tips and 3 cross girders were lifted by the derrick cranes from barges and bolted to the deck. Diagonal bracing in the grids consisting of 20mm bars were used to orient these very flexible grids correctly in plan. Along the longitudinal girders a row of concrete panels were placed to gain access to the cable anchorages. Finally the steel cross girders which connect the two grids at the location of the inner cable anchorages were installed. In elevation the correct tangential connection of the new grids to the existing deck was guaranteed by drifts in block drilled bolt holes placed during trail assembly.
2. panel stage: the steel grids were designed to bear the loads of the steel stage and before any further slabs could be placed, cable installation had to start. Strands were stressed to a first stressing stage and the remaining concrete slabs were placed in parallel.
3. freeze stage: after all panels and strands were in place, the grid geometry and the cable forces were checked again and after approval of the results the joints of the concrete slabs were cast, thus making the new grid act compositely.
4. final stage: when the concrete in the joints had reached a strength of 20MPa, in a second stressing stage the cables were stressed to their final length and with a concrete strength of 30MPa the derrick cranes were advanced onto the new grid to start the cycle again.

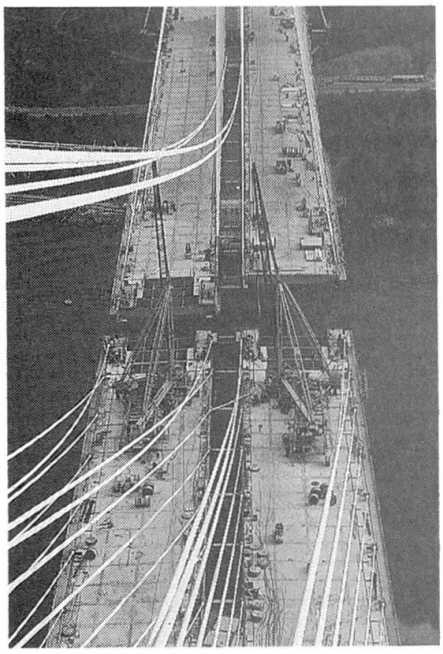

Fig. 5 Deck Erection

For the composite deck of the Ting Kau bridge stressing the cables was a two step procedure. In the first step at the panel stage the cables were stressed „to force" and in the second step at the final stage the cables were stressed „to length". At the panel stage the cable forces and the dead weight of the new grid act on the steel sections only. The cable forces of the first step were determined so that zero overall curvature was introduced into the steel, i.e. when the section was made composite at the freeze stage neither upwards nor downward curvature was „frozen" into the deck sections. Only in the second step at the final stage the cable were stressed to their final length which for the completed structure under permanent loads would guarantee bending moments in the deck equal to those of a continuous beam on rigid supports.

For the stages described above the deck geometry and cable forces were controlled exhaustively. Local surveys of the grid geometry in plan, elevation and in the cross direction were done at the steel and panel stages. For each freeze stage a global geometric survey of the entire cantilever was produced. Cable forces were surveyed at the panel and at the final stage. The designers were present on site to compare the survey results with the theoretical values on a day to day basis. Each of the cantilever stages was modeled with a computer model which could exactly represent the ever varying loads at each stage as well as effects of creep, shrinkage and temperature. Any measures of correction such as adjustments of the grids in plan at the steel stage or restressing of cables at the panel stage, which fortunately were rarely necessary, could thus be executed immediately and evaluated.

While in the beginning construction of the towers and fabrication of the steel work had some slow periods, deck erection was executed at record speed. Initially a deck erection cycle as described above took almost 2 weeks but after experience was gained the cycle time reduced to 4 days. A mayor part of the deck was built in three month. In October and November 1997 the deck „grew" at a speed of almost 100m per week. In November alone, 1000 tons of cable steel were installed and in December the main cantilevers reached the impressive length of 275m each (see fig. 6 and 7).

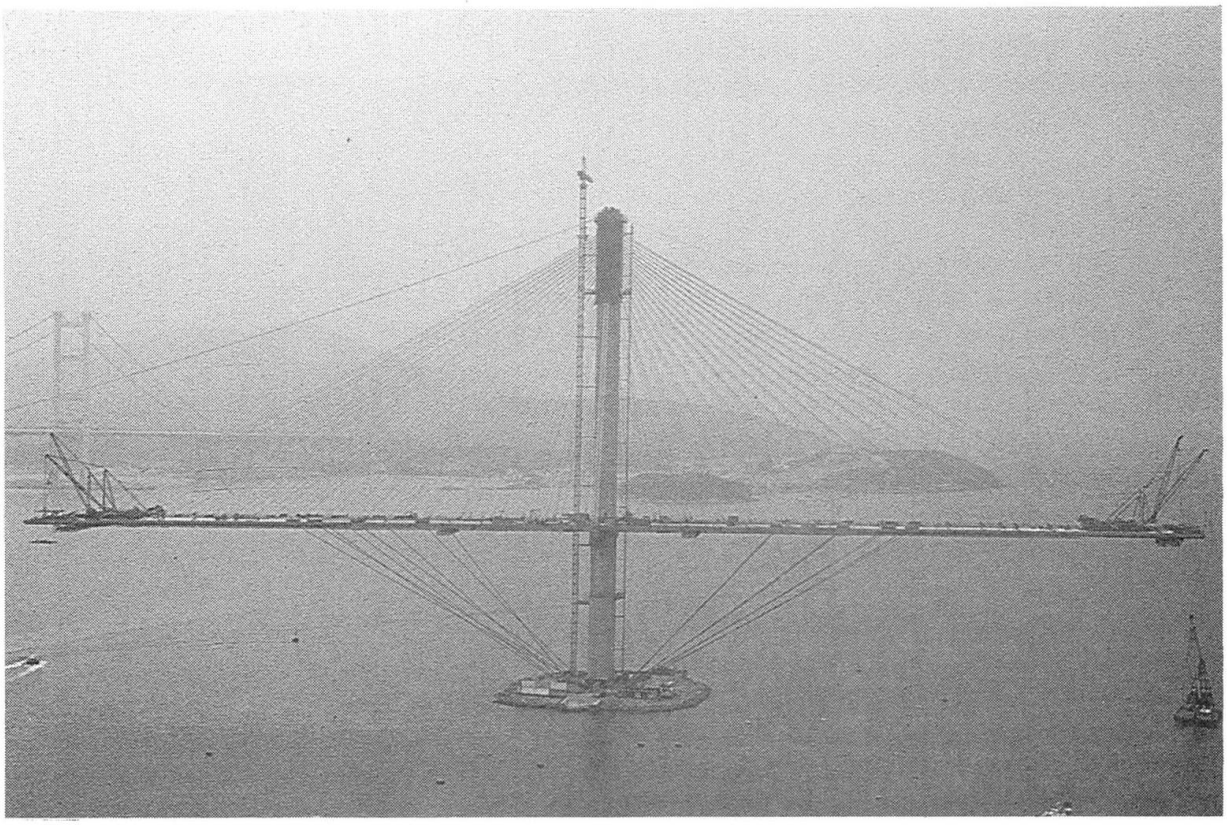

Fig. 6 Main cantilever

Regarding wind loads the design philosophy for the Ting Kau bridge was to dimension the towers for the completed structure and to reduce all unacceptable forces and displacment due to wind during erection by introducing additional temporary cables. A full aeroelastic model, which was used to prove the aerodynamic stability of the completed structure in the wind tunnel, had been designed so that portions of the deck could be removed to test erection stages (see also [4]). Thus all critical cantilever stages were tested in the wind tunnel. For the main tower the longitudinal stabilising cables were installed at an early stage in order to reduce wind induced oscillations (rocking) of the tower in elevation. In order to reduce torsional rotation of the deck around the tower in plan under typhoon conditions, three types of temporary measures were envisaged. For a cantilever length up to 70m the deck was torsionally fixed to the tower by temporary steel brackets and up to a cantilever length of 170m cross wise installed tie down cables connected the deck to the pile cap of the tower foundation (see fig. 6). For longer cantilever lengths two pairs of cross cables would have connected the cantilever tips to the tips of the adjacent lateral spans. The latter, however, which would have been cumbersome to install, eventually did not become necessary because the cantilevers reached their critical lengths out of the typhoon season and for reduced wind speeds the tie down cable were sufficient.

4. Conclusion

The Ting Kau bridge in Hong Kong, with 1177m of cable supported deck one of the longest cable stayed bridges in the world, and the process of deck erection and analysis has been described here. A multispan deck, separate carriageways and longitudinal and transverse stabilising cables on monoleg towers have led to a design that tries to combine, beauty and economy, slenderness and stability.

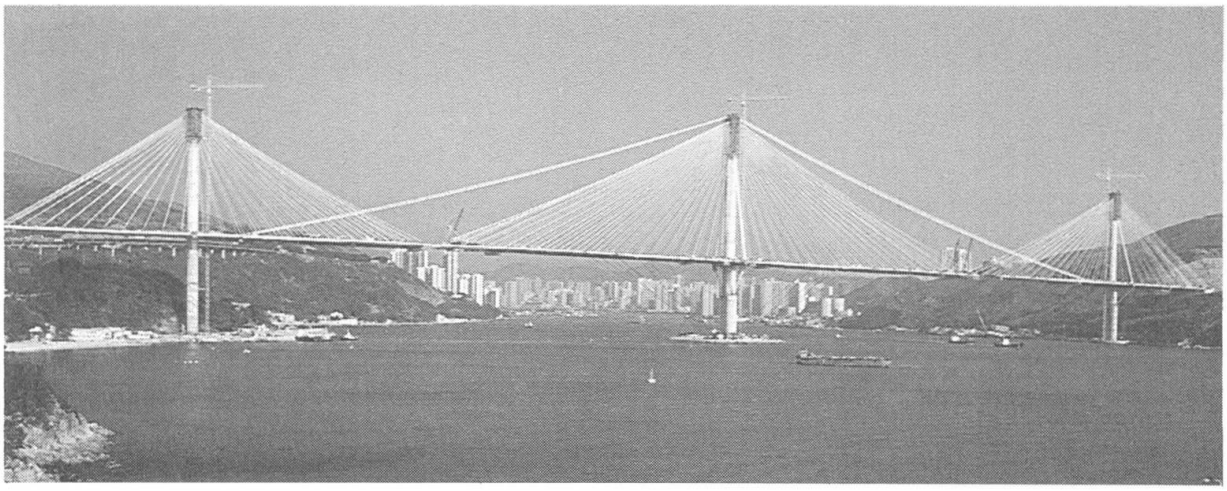

Fig. 7 Ting Kau Bridge in January 1998

References

[1] R. Bergermann, M. Schlaich, „Ting Kau Bridge Hong Kong", IABSE SEI 3/96.

[2] R. Bergermann, M. Schlaich, „Variety in Cable Stayed Bridge Design (The Conceptual Design of the Ting Kau Bridge)", Proceedings of IASS Syposium Conceptual Design of Structures, Stuttgart, Germany, 1996.

[3] R. Swan, „The real landmark", Bridge Design & Engineering, issue August 1997, p. 43.

[4] P. King, A. Davenport, M. Schlaich, „Wind Engineering Studies for the Ting Kau Bridge Hong Kong", ASCE congress 1997, USA.