Zeitschrift: IABSE reports = Rapports AIPC = IVBH Berichte

Band: 79 (1998)

Artikel: Composite suspension bridge tower with concrete filled double steel walls

Autor: Nakamura, Shunichi / Nishiumi, Kenji

DOI: https://doi.org/10.5169/seals-59853

Nutzungsbedingungen

Die ETH-Bibliothek ist die Anbieterin der digitalisierten Zeitschriften auf E-Periodica. Sie besitzt keine Urheberrechte an den Zeitschriften und ist nicht verantwortlich für deren Inhalte. Die Rechte liegen in der Regel bei den Herausgebern beziehungsweise den externen Rechteinhabern. Das Veröffentlichen von Bildern in Print- und Online-Publikationen sowie auf Social Media-Kanälen oder Webseiten ist nur mit vorheriger Genehmigung der Rechteinhaber erlaubt. Mehr erfahren

Conditions d'utilisation

L'ETH Library est le fournisseur des revues numérisées. Elle ne détient aucun droit d'auteur sur les revues et n'est pas responsable de leur contenu. En règle générale, les droits sont détenus par les éditeurs ou les détenteurs de droits externes. La reproduction d'images dans des publications imprimées ou en ligne ainsi que sur des canaux de médias sociaux ou des sites web n'est autorisée qu'avec l'accord préalable des détenteurs des droits. En savoir plus

Terms of use

The ETH Library is the provider of the digitised journals. It does not own any copyrights to the journals and is not responsible for their content. The rights usually lie with the publishers or the external rights holders. Publishing images in print and online publications, as well as on social media channels or websites, is only permitted with the prior consent of the rights holders. Find out more

Download PDF: 14.12.2025

ETH-Bibliothek Zürich, E-Periodica, https://www.e-periodica.ch

Composite Suspension Bridge Tower with Concrete Filled Double Steel Walls

Shunichi NAKAMURA
Prof. Dr
Tokai Univ.
Hiratuka, Japan

Kenji NISHIUMI
Civil Eng.
Nippon Steel Corp., Steel Struct. Dev.
Futtu, Japan

Summary

A new composite tower is developed and applied to the suspension bridge towers. The new tower consists of corner columns and side walls with double steel plate elements, and concrete is poured inside the columns and the steel elements. The columns and steel elements are connected by the composite joints which are usually used for steel sheet piles. An alternative design is performed for the Akashi Kaikyo Bridge Tower, which shows that the steel weight of this composite tower becomes half of the original steel tower.

1. Structural forms of new composite tower

Two types of towers have been used for suspension bridge towers: steel and concrete towers. Steel towers enable quick site erection but are relatively expensive mainly because of facing machine work on the plate ends. Concrete towers are advantageous in resisting compressive forces but careful quality control is required to avoid cracks due to bending moments, and mold works are inevitable for concrete work. A new type of composite towers are developed for suspension bridge towers as shown in fig.1. Columns consisting of steel box or pipes are arranged at the corners, double wall steel elements connect these columns, and concrete are filled inside the columns and the steel elements. Adjacent steel elements are jointed by the composite joints with claws which are used for steel sheet piles. The filled concrete mainly resists compressive forces and steel plates resist bending moments. This type of composite towers have been already used for bridge piers of Meiko Center Bridge with about 50m high, as shown in picture 1.

2. An alternative design of the Akashi Kaikyo Tower using composite tower

This new composite tower is designed as an alternative for the tower on the Akashi Kaikyo Bridge with spans 960+1990+960m. Dimensions of the assumed cross sections for steel and composite towers are shown in fig.2. The design loads on a cable plane are the dead load of suspended girders and cables of 200kN/m, live loads of 21kN/m, and cable temperature change of 30deg. Table 1 shows the main calculation results. Horizontal tower displacements of both towers are not very much different instead of the large difference of the bending stiffness of towers, but bending moment of the composite tower is 2.5 times large that of the steel tower. Strength is checked by the following equations.

$$\gamma = \nu P/Pcr + \nu M/My \leqq 1.0 \qquad \text{for steel tower}$$

$$\gamma = \nu^2(1+\beta)(P/Pu)^2 - \nu\beta(P/Pu) + \nu M/Mu \leqq 1.0 \qquad \text{for composite tower}$$

where ν: safety factor 1.7 for steel towers and 1.5 for concrete towers, P: axial forces, Pcr: critical axial strength, Pu: ultimate axial strength, M: bending moment, My: yield bending moments, Mu: ultimate bending moments and β: coefficients proposed by Nakai (Proc. JSCE, I-6, 1986). The steel towers are checked by the yield strength but composite towers by the ultimate strength. The compressive strength reduction due to buckling is included in Pcr and Pu. Structural detail for the Akashi Kaikyo Bridge Tower is shown in fig.3. Six square box columns with width of 1.2m are arranged at the corners. Double wall steel elements with width of 0.9m connect the columns with the composite joints. Concrete is poured inside the columns and the steel elements,

and no mold is required for concrete works. The steel weight of the composite tower is 50% of the steel tower but the total weight is 3.4 times large as shown in table 1.

Table 1 Calculation results

Calculation results (per column)	Composite Tower	Steel Tower
Cable tension due to dead load (kN)	497,500	497,500
Cable tension due to live and temperature loads (kN)	38,130	37,610
Vertical force at tower top (kN)	467,500	465,200
Vertical force at tower bottom (kN)	776,200	583,900
Maximum tower bending moment (kN.m)	2,285,000	911,800
Moment of inertia of tower (m^4)	197.0	56.80
Horizontal tower displacement (m)	1.48	1.61
Safety factor : ν	1.50	1.70
Value of capacity check equation : γ	0.98	0.95
Total weight of steel (ton)	4,710	9,325
Total weight of concrete (ton)	27,600	0
Total weight (ton)	32,310	9,325

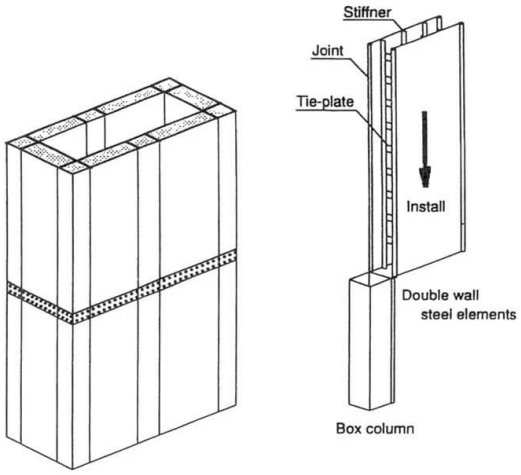

Fig.1 A new composite tower

Picture 1 Meiko Center Bridge Tower

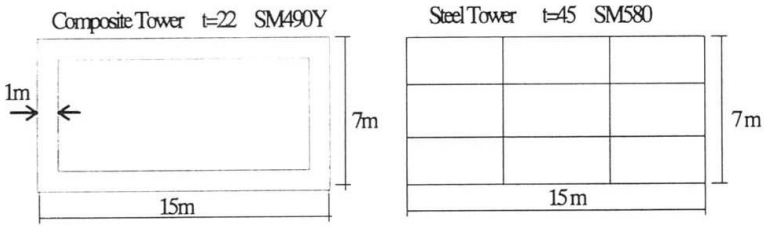

Fig.2 Cross sections of composite and steel towers

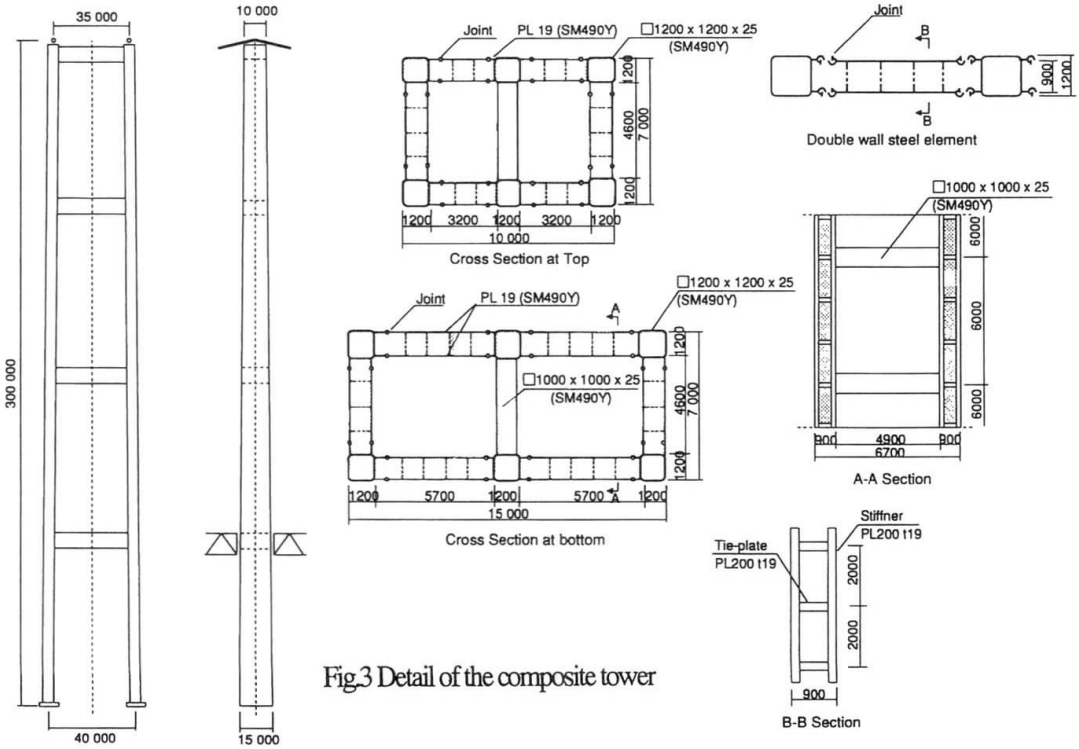

Fig.3 Detail of the composite tower