Zeitschrift: IABSE reports = Rapports AIPC = IVBH Berichte
Band: 79 (1998)

Artikel: Small strain non-linear relations for 3D space beam systems
Autor: Vasek, Milan
DOI: https://doi.org/10.5169/seals-59991

Nutzungsbedingungen
Die ETH-Bibliothek ist die Anbieterin der digitalisierten Zeitschriften auf E-Periodica. Sie besitzt keine Urheberrechte an den Zeitschriften und ist nicht verantwortlich für deren Inhalte. Die Rechte liegen in der Regel bei den Herausgebern beziehungsweise den externen Rechteinhabern. Das Veröffentlichen von Bildern in Print- und Online-Publikationen sowie auf Social Media-Kanälen oder Webseiten ist nur mit vorheriger Genehmigung der Rechteinhaber erlaubt. Mehr erfahren

Conditions d'utilisation
L'ETH Library est le fournisseur des revues numérisées. Elle ne détient aucun droit d'auteur sur les revues et n'est pas responsable de leur contenu. En règle générale, les droits sont détenus par les éditeurs ou les détenteurs de droits externes. La reproduction d'images dans des publications imprimées ou en ligne ainsi que sur des canaux de médias sociaux ou des sites web n'est autorisée qu'avec l'accord préalable des détenteurs des droits. En savoir plus

Terms of use
The ETH Library is the provider of the digitised journals. It does not own any copyrights to the journals and is not responsible for their content. The rights usually lie with the publishers or the external rights holders. Publishing images in print and online publications, as well as on social media channels or websites, is only permitted with the prior consent of the rights holders. Find out more

Download PDF: 25.10.2025

ETH-Bibliothek Zürich, E-Periodica, https://www.e-periodica.ch

Small Strain Non-Linear Relations for 3D Space Beam Systems

Milan VASEK
Assoc. Prof.
Czech Techn. Univ.
Praha, Czech Republic

Milan Vasek, born 1941, received his civil eng. degree from the Czech Techn. Univ. Prague and PhD in 1974. He is currently teaching at the Czech Techn. Univ. and working as consulting and forensic eng. He was as visiting Prof. at Mie Univ. in Japan 1991 and Fulbright scholar at Pittsburgh Univ. in USA in 1995.

Summary

This contribution is dedicated to the improvement of the geometric non-linear solution of 3D beam space structural system based on a finite element approach. The improved relations are based on all terms of the energy expression for the axial deformation. The energy due to the deformation caused by St.Venant torsion of 3D-beam element is taken into the account for the geometric non-linear behavior of the 3D element. The influence of each component of a joint deflection on the others within the non-linear solution of the element is clearly separated. The effect of the elastically constrained members is included in relations. The new cross sectional properties of the 3D beam are presented.

1. Introduction

Geometric non-linear behavior of space structures is investigated by many researchers. The classical approach is dealing with the geometric stiffness matrix $\mathbf{k}_G$. The nodal forces are given by the well known equation (1) from [1].

$$\mathbf{S} = (\mathbf{k}_E + \mathbf{k}_G)\,\mathbf{U} \qquad (1)$$

where **S** is the vector of nodal forces of the element, **U** is the vector of the nodal displacements, $\mathbf{k}_E$ is the elastic stiffness matrix and $\mathbf{k}_G$ is the geometric stiffness matrix.

The point of interest on the influence of semirigid connections together with the non-linear behavior of structure is described in [2], [3], [4], [5], [6]. Space structural frameworks are intensively used since 1980's. Papers dealing with these problems are published in proceedings on Space structures [4], [5]. At the work [9] are derived relations for the semirigid connections with respect to the all twelve degrees of freedom in the space. The solution which is based on the equation (1) is omitting higher order terms of the beam energy due to axial deformation. The concept of a geometric stiffness matrix is based on the simplification that the load imposed onto the structure is unchanged, during the load step increment. The relations which are introduced in this paper are not using any simplification and all the terms in the energy expression are used. As result of the approach leads to a clearly separated relations for each component of the deflection. The other effect of the approach is that the relations are more accurate then the previous equation (1). The detail derivation and the solution procedure is described in [6], [7], [8]. It is also

possible to introduce the effect of the semirigid connections as were derived by Toader at [9]. The derived results are corresponding to the relations for the plane frame structures in [10].

2. Non linear relations

2. 1 Basic Assumptions

The derivation is based on the following assumptions:
1) 3D members are straight without any imperfections
2) The local coordinate system of the member follows the right hand rule and is coincident with major principal axis of the member
3) Navier's hypothesis is valid for the cross-section of the member.
4) Torsion is assumed to be Saint Venant type, i. g. warping is neglected.
5) The load step increment is finite
6) The loads are acting on joints
7) The structural material is elastic-perfectly plastic
8) Local stability effects do not occur

2.2. The basic relations of geometric non-linear behavior

The relation between the nodal displacements and element deformations is described by

$$\mathbf{u}\,(x, y, z) = \mathbf{a}\ \mathbf{U}\,(u_1, u_2, u_3, \ldots\ldots u_n) \qquad (2)$$

where **u** is the vector of the element deformations and **U** is the vector of nodal displacements. Matrix **a** is the matrix of functions describing the geometrical relations between these displacements. Non-dimensional coordinates are introduced as $\xi = \frac{x}{L}, \zeta = \frac{y}{L}, \eta = \frac{z}{L}$, where x, y, z are dimensions in local coordinate system and L is the length of the 3D element (Fig.1)
The deformed length of an infinitesimally small element (Fig.2) can be expressed as

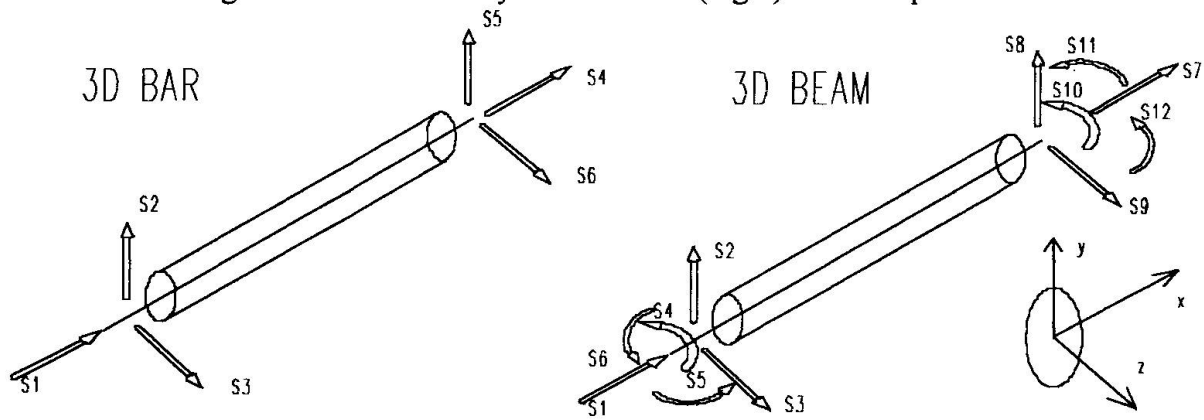

Fig.1: The 3D bar and beam member

$(1+\varepsilon_x^a)dx$ where the ε_x^a is the engineering axial strain and dx is the elements length. Applying Pythagora's theorem, the elongation of the element may be expressed as

$$[(1+\varepsilon_x^a)dx]^2 = \left(dx + \frac{\partial u}{\partial x}dx\right)^2 + \left(\frac{\partial v}{\partial x}dx\right)^2 + \left(\frac{\partial w}{\partial x}dx\right)^2 \tag{3}$$

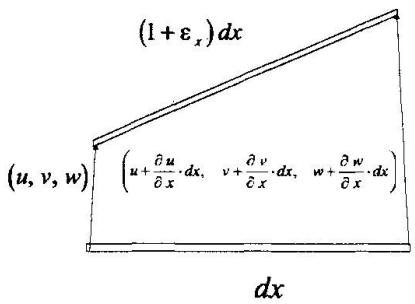

This can be simplified as:

$$\varepsilon_x\left(1+\frac{\varepsilon_x}{2}\right) = \frac{\partial u}{\partial x} + \frac{1}{2}\left(\frac{\partial u}{\partial x}\right)^2 + \frac{1}{2}\left(\frac{\partial v}{\partial x}\right)^2 + \frac{1}{2}\left(\frac{\partial w}{\partial x}\right)^2 \tag{4}$$

The right hand side of equation (4) represents the component of the Green strain tensor e_{xx}. For the condition of small strain, we can write $(\varepsilon_x^a)^2 = 0$ and the Green tensor coincides with the engineering strain ε_x. If we introduce terms for the axial deformation due to bending to the expression (4) we receive

Fig.2: The beam element

$$\varepsilon_x = \frac{\partial u}{\partial x} + \frac{1}{2}\left(\frac{\partial v}{\partial x}\right)^2 + \frac{1}{2}\left(\frac{\partial w}{\partial x}\right)^2 - y\frac{\partial^2 u_y}{\partial x^2} - z\frac{\partial^2 u_z}{\partial x^2} \tag{5}$$

The energy of the member due to the axial deformation (5) can be expressed by equation (6)

$$U = \tfrac{1}{2}E\int_V \varepsilon^2 dV \tag{6}$$

The whole axial energy expression is expressed as:

$$\begin{aligned} U = \frac{E}{2}\int_0^L\oint_A \Bigg\{ & \left(\frac{\partial u_x}{\partial x}\right)^2 + \left(\frac{\partial^2 u_y}{\partial x^2}\right)^2 y^2 + \left(\frac{\partial^2 u_z}{\partial x^2}\right)^2 z^2 + \frac{1}{4}\left(\frac{\partial u_x}{\partial x}\right)^4 + \frac{1}{4}\left(\frac{\partial u_z}{\partial x}\right)^4 + \frac{\partial u_x}{\partial x}\left(\frac{\partial^2 u_y}{\partial x^2}\right)^2 + \frac{\partial u_x}{\partial x}\left(\frac{\partial^2 u_z}{\partial x^2}\right)^2 \\ & -2\frac{\partial u_x}{\partial x}\frac{\partial^2 u_y}{\partial x^2}y - 2\frac{\partial u_x}{\partial x}\frac{\partial^2 u_{zy}}{\partial x^2}z + \frac{1}{2}\left(\frac{\partial u_y}{\partial x}\right)^2 - \left(\frac{\partial u_y}{\partial x}\right)^2\left(\frac{\partial^2 u_y}{\partial x^2}\right)y - \left(\frac{\partial u_y}{\partial x}\right)^2\left(\frac{\partial^2 u_z}{\partial x^2}\right)z - \frac{\partial^2 u_y}{\partial x^2}\left(\frac{\partial u_z}{\partial x}\right)^2 y \\ & -\left(\frac{\partial u_z}{\partial x}\right)^2\left(\frac{\partial^2 u_z}{\partial x^2}\right)z + \frac{\partial^2 u_y}{\partial x^2}y\frac{\partial^2 u_z}{\partial x^2}z \Bigg\} dA\,dx \end{aligned} \tag{7}$$

Let's express the deflection vector **u** in the form of nodal displacements using the equation (2) and perform the integration of the equation (7). After that, Castigliano's theorem (part 1) can be applied to the expression (7) with respect to the deflections u_1,, u_2, ... u_{12},. We obtain the relations for the nodal forces S_1, S_2, ... S_6 for the 3D bar and S_1, S_2, ... S_{12} for the 3D beam. To express results in the matrix form we have to introduce new cross sectional properties to express torsional moments S_4 and S_{10}. These terms are written as

$$K_y = \oint_A z^4 dA, \qquad K_z = \oint_A y^4 dA, \qquad K_{zy} = \oint_A z^2 y^2 dA, \tag{8}$$

We can call these expressions "moments of inertia of second order". Another feature of the approach is that each nodal force is dependent on a symmetrical square matrix which includes terms composed only from the cross-sectional properties and constants. The non-linear influence of the other nodal displacements are excluded from the geometric nonlinear stiffness matrices. Therefore it is possible to separate the influences of different nodal displacements on the observed nodal force. This approach leads to the expression for each force which relies on the 6x6 matrices for the 3D bar element or 12 x 12 matrices for the 3D beam element.

2.3 The Non-linear solution for 3D members with the separate effects of deflections

The general equation for the forces at the end nodes of a 3D bar element is as follows:

$$S_i = \mathbf{k}_{Ei}\,\mathbf{U} + (\mathbf{U}^T\,\mathbf{h}_i\,\mathbf{U}) + u_j\,(\mathbf{U}^T\,\mathbf{q}\,\mathbf{U}) + u_j\,(\mathbf{U}^T\,\mathbf{g}\,\mathbf{U}) \tag{9}$$

where index j relies on the index i of the evaluated force as $j=i+3$ for $i=2,3$ and $j=i-3$ for $i=5,6$

u_i, u_j ..... nodal displacements (scalar quantities) which have the major effect on the corresponding force S_i

k_{Ei} ..... i-th row of the elastic stiffness matrix,

$\mathbf{h}_i$ ..... square 6x6 matrices, which express the loading change during the load step (corresponds to the well known geometrical stiffness matrix $\mathbf{k}_G$)

$\mathbf{U}$..... 6x1 vector of node displacements

$\mathbf{U}^T$..... transpose of vector U

$\mathbf{q}$, $\mathbf{g}$ .....square 6x6 matrices which express the higher terms of order in the longitudinal strain energy of a bar

The expression results for a 3D beam element are more complicated. The derivation procedure is similar to that of a 3D bar element. The general equation for nodal forces applied to a 3D beam, which represent shear, axial force and bending, is

$$S_i = k_{Ei}\,\mathbf{U} + (\mathbf{U}^T\,{}^7\mathbf{h}_i\,\mathbf{U}) + (\mathbf{U}^T\,{}^1\mathbf{h}_i\,\mathbf{U}) \tag{10}$$
$$+ u_i\,(\mathbf{U}^T\,{}^i\mathbf{e1}\,\mathbf{U}) + u_{i+6}\,(\mathbf{U}^T\,{}^{i+6}\mathbf{e2}\,\mathbf{U}) + u_j\,(\mathbf{U}^T\,{}^j\mathbf{e3}\,\mathbf{U}) + u_{j+6}\,(\mathbf{U}^T\,{}^{j+6}\mathbf{e4}\,\mathbf{U})$$

where ${}^7\mathbf{h}_i = -{}^1\mathbf{h}_i$ are square 12x12 matrices which express the loading change during the loading step (corresponds to, the well known, geometrical stiffness matrix $\mathbf{k}_G$). Superscript *7* or *1* express the influence of *7th* or *1st* node deflection as a major influence

k_{Ei} ..... corresponding row of the elastic stiffness matrix

$\mathbf{U}$..... 12x1 vector of nodal displacements

${}^i\mathbf{e1}$, ${}^{i+6}\mathbf{e2}$, ${}^j\mathbf{e3}$, ${}^{j+6}\mathbf{e4}$ .. square 12x12 matrices which express the influence of higher order terms in the axial strain energy expression of a 3D beam element

u_i, u_j, u_{i+6}, u_{j+6}..... the node displacements (scalar quantities), which have a major influence on the corresponding force S_i, where index i is 2 and index j is 6 for the forces S_2, S_8, S_6, S_{12}, index i is 3 and index j is 5 for the forces S_3, S_9, S_5, S_{11},

Expressions for the torsional moments S_4, S_{10} are slightly different. These forces represent Saint Venant's torsion. The matrix equation for the nodal torsional moment is as follows:

$$S_i = \mathbf{k}_{Ei}\,\mathbf{U} + (\mathbf{U}^T\,{}^7\mathbf{h}_i\,\mathbf{U}) + (\mathbf{U}^T\,{}^1\mathbf{h}_i\,\mathbf{U}) + u_i\,(\mathbf{U}^T\,{}^i\mathbf{g1}\,\mathbf{U}) + u_{i+6}\,(\mathbf{U}^T\,{}^{i+6}\mathbf{g2}\,\mathbf{U}) \tag{11}$$

where index i is either 4 or 10.

Matrices **g1** and **g2** for the torsional moment S_4, at the near end of the element include the same terms as matrices **g1** and **g2** for the torsional moment S_{10}, at the far end of the beam element, except they are of an opposite sign. The basic difference between the expressions for bending moments and shear forces is in the non-linear influence of the governing deflection u_i which is separated out of the matrix equation as a factor. The torsional moments are influenced only by the torsional deflection u_4 and u_{10}. Then the equation (10) or (11) can be expressed in a form

$$\mathbf{S} = \mathbf{S}_E + \mathbf{S}_G + \mathbf{S}_Q \tag{12}$$

Forces $\mathbf{S}_G$ which corresponds to the forces which were calculated with the geometric stiffness matrix $\mathbf{k}_G$ are now divided into two parts $(\mathbf{U}^T\,{}^7\mathbf{h}_i\,\mathbf{U})$ and $(\mathbf{U}^T\,{}^1\mathbf{h}_i\,\mathbf{U})$. The first part $(\mathbf{U}^T\,{}^7\mathbf{h}_i\,\mathbf{U})$ express the influence of the deflections at the far end of the element to the solved nodal force S_i.

The second part ($\mathbf{U}^T\ {}^1\mathbf{h}_i\ \mathbf{U}$) express the influence of the deflections at the near end of the element to the solved nodal force S_i. For the force S_1 the matrix ${}^1\mathbf{h}_1 = \mathbf{0}$. Similarly for the force S_7 the matrix ${}^7\mathbf{h}_7 = \mathbf{0}$. For the force S_1 and S_7 are matrices ${}^7\mathbf{h}_1 = -\,{}^1\mathbf{h}_7$ and the terms remind in the geometrically stiffness matrix $\mathbf{k}_G$. Thus, the effect of the geometric non-linear behavior expressed by the approximate formula using the geometric stiffness matrix is good for axial force, but the other non-linear influences to the shear forces and bending and the torsional moments are not taken into the account in the equation (1).
Matrices ${}^i\mathbf{e1}$, ${}^i\mathbf{e2}$, ${}^i\mathbf{e3}$, ${}^i\mathbf{e4}$ for shear forces S_2 and S_8, and similarly for S_3 and S_9, include the same terms, however they are negative for ${}^i\mathbf{e1}$, ${}^i\mathbf{e2}$, ${}^i\mathbf{e3}$, ${}^i\mathbf{e4}$ for the forces S_8 and S_9 at the far end of the element. The same is true for the torsional moments S_4 and S_{10}. Therefore, only matrices ${}^i\mathbf{e1}$, ${}^i\mathbf{e2}$, ${}^i\mathbf{e3}$, ${}^i\mathbf{e4}$ need to be written to express the forces S_2 and force S_3. The matrices ${}^i\mathbf{e1}$, ${}^i\mathbf{e2}$, ${}^i\mathbf{e3}$, ${}^i\mathbf{e4}$ for the bending moments vary in a position and value of non zero elements. The following are matrix expressions showing the non linear relations between internal forces and deflections with respect to the governing deflections which are as factors out of the matrices.
The elastic matrix $\mathbf{k}_{Ei}$ in this expression can be submitted by the matrix with the influence of semirigid connections as was derived in [13]. We can therefore solve the member forces with respect to the non-linear behavior with included semirigid connections. The coefficients for the connections can be established either by experiments or by FEM calculation of a joint with respect to the material non-linear behavior. The simple iteration procedure described at the example at [6] could be applied for the solution.

2.4 The effect of the shear torsional energy

The influence on the geometrically non linear behavior due to the shear energy should be also included in the expression for the energy of the element. In the space framework the forces at any joint are distributed to the bending and the torsional moments. Also the torsional energy should be taken into the account. The space frame members are usually made from tubes. The Saint Venant torsion express properly the behavior of the member. Several basic assumptions are as folows. With respect to these assumptions the cross sections of the beam are not deformed, they are only rotated against each other under the Saint Venant torsion. For the position at axis x, e.g. $z_0 = 0$, $y_0 = 0$ we can write

$$\frac{\partial u_x}{\partial y} = 0,\ \frac{\partial u_x}{\partial z} = 0 \qquad \gamma_{zy} = 0 \qquad \frac{\partial u_x}{\partial y_0} = \frac{\partial u_x}{\partial z_0} = 0 \tag{13}$$

We can now write the expression for the rest of the shear stress tensor as follows

$$\gamma_{xy} = \frac{\partial u_y}{\partial x} + \frac{\partial u_z}{\partial x}\cdot\frac{\partial u_z}{\partial y} \qquad \gamma_{xz} = \frac{\partial u_z}{\partial x} + \frac{\partial u_y}{\partial x}\cdot\frac{\partial u_y}{\partial z} \tag{14}$$

Energy of the deformed beam due to the shear deflections can be expressed at equation (15)

$$U = \frac{G}{2}\int_L\int_A\left[\left(\frac{\partial u_y}{\partial x}\right)^2 + \left(\frac{\partial u_z}{\partial x}\right)^2 + \left(\frac{\partial u_z}{\partial x}\cdot\frac{\partial u_z}{\partial y}\right)^2 + \left(\frac{\partial u_y}{\partial x}\cdot\frac{\partial u_y}{\partial z}\right)^2 + 2\left(\frac{\partial u_y}{\partial x}\right)\left(\frac{\partial u_z}{\partial x}\cdot\frac{\partial u_z}{\partial y}\right) + 2\left(\frac{\partial u_z}{\partial x}\right)\left(\frac{\partial u_y}{\partial x}\cdot\frac{\partial u_y}{\partial z}\right)\right] dx\, dA \tag{15}$$

After the same procedure which was shown and explained above, we will receive matrix expression for the nodal forces with respect to the energy spent for the shear deformation due to the Saint Venant torsion. The values of terms in the matrices are similar to the values at the stiffness matrix with respect to the axial deformation. For the materials with relatively large shear modulus is therefore reasonable to include the effect to the analysis. Final matrix equation for the nodal forces is different for the forces due to the shear and bending and different for the forces due to

the torsion S_4, and S_{10}. This fact is similar as at the previous equations (10) and (11). We can write for the first group of the forces the equation (16)

$$\mathbf{S} = \frac{GA}{2} \{ \mathbf{e}\ \mathbf{U} + \tfrac{1}{3}\mathbf{e}\,\mathbf{U}\,\mathbf{U}^T\ \mathbf{c}\ \mathbf{U} \} \tag{16}$$

and for the torsional forces we have

$$S_4 = \frac{GA}{2}\ {}^4\mathbf{d}\ \mathbf{U}\ \mathbf{U}^T\ \mathbf{r}\ \mathbf{U}, \qquad S_{10} = \frac{GA}{2}\ {}^{10}\mathbf{d}\ \mathbf{U}\ \mathbf{U}^T\ \mathbf{r}\ \mathbf{U}, \tag{17}$$

These expressions can be added to the equation (12) and solved simultaneously. The orthogonal transformation from the local to the global system can be used to express the non-linear expression for the whole system.

Conclusion

The derived equations allow to obtain geometric non-linear solution of an arbitrary 3D beam system with the possibility to solve effect of each deflection component separately. The accuracy of the solution can be easily controlled according to which matrices are used. The stability of large one-layer systems is highly effected by the real rigidity of nodes, which can be partially plastified. The derived equations allow to solve 3D system with respect to the non-linear behavior with the effect of the semirigid connection. The evaluation of the effect of each deflection to the non-linear behavior of system is assume to be done with respect to different topology of space systems.

References

[1] J.S. Przemieniecki, Theory of Matrix Structural Analysis, Mc Graw Hill, (1968)
[2] Y. Goto and W. F. Chen, Second- Order Elastic Analysis for Frame Design, J. of Struct. Eng. ASCE, Vol. 113, 7, July, 1501-1529, (1987)
[3] J.Y. Richard Liew and W. F. Chen, Stability Design of Semirigid Frames, John Willey & Sons Inc., New York, (1996)
[4] H. Nooshin , Third International Conference on Space Structures, Elsevier Ap plied Science Publishers, London, New York, (1984)
[5] G. A. R. Parke and C. M. Howard, Space Structures 4 th Conference Proceedings on Space Structures , Thomas Telford Services Ltd. London , (1993)
[6] M. Vasek, Solution of Bars or Beams with repect to Geometrical Nonlinearity, Stavebnicky časopis VEDA, Vol.24, 5, 415- 428, Vyd. Slovenskej Akademie Vied, Bratislava, (1975)
[7] M. Vasek, The Non-linear Behaviour of Large Space Bar and Beam Structures, G.A.R. Parke and C.M.Howard, Space Structures 4 th Conference Proceedings on Space Structures , 665-674, Thomas Telford Services Ltd. London, (1993)
[8] M. Vasek, M. Drdacky, K. Hoblik, Research Report of the Czech Grant Office no. 103/93/2027 , Space Roof Structural System, Pittsburgh, Prague, (1996)
[9] I. H.J. Toader, Stability functions for Members with Semirigid Joint Connections, J. of Struct. Eng., Vol.119, 2, February, ASCE, 505-521, (1993)
[10] M.A.M.Torkamani, M.Sonmez, J.Cao,Second-Order Elastic Plane-Frame Analysis Using Finite Element Method,J. of Struct. Eng., Vol.123, 9 , Sept, ASCE, (1997)