Zeitschrift: IABSE reports = Rapports AIPC = IVBH Berichte

Band: 78 (1998)

Artikel: Numerical modelling of prefabricated segmental tunnels under embankments

Autor: Bastick, Michel J. / Guillox, Alain / Longuet, Christelle

DOI: https://doi.org/10.5169/seals-59034

Nutzungsbedingungen

Die ETH-Bibliothek ist die Anbieterin der digitalisierten Zeitschriften auf E-Periodica. Sie besitzt keine Urheberrechte an den Zeitschriften und ist nicht verantwortlich für deren Inhalte. Die Rechte liegen in der Regel bei den Herausgebern beziehungsweise den externen Rechteinhabern. Das Veröffentlichen von Bildern in Print- und Online-Publikationen sowie auf Social Media-Kanälen oder Webseiten ist nur mit vorheriger Genehmigung der Rechteinhaber erlaubt. Mehr erfahren

Conditions d'utilisation

L'ETH Library est le fournisseur des revues numérisées. Elle ne détient aucun droit d'auteur sur les revues et n'est pas responsable de leur contenu. En règle générale, les droits sont détenus par les éditeurs ou les détenteurs de droits externes. La reproduction d'images dans des publications imprimées ou en ligne ainsi que sur des canaux de médias sociaux ou des sites web n'est autorisée qu'avec l'accord préalable des détenteurs des droits. En savoir plus

Terms of use

The ETH Library is the provider of the digitised journals. It does not own any copyrights to the journals and is not responsible for their content. The rights usually lie with the publishers or the external rights holders. Publishing images in print and online publications, as well as on social media channels or websites, is only permitted with the prior consent of the rights holders. Find out more

Download PDF: 28.11.2025

ETH-Bibliothek Zürich, E-Periodica, https://www.e-periodica.ch

Numerical modelling of prefabricated segmental tunnels under embankments

Michel J. BASTICK
Development Manager,
Groupe TAI,
PARIS, FRANCE

Alain GUILLOUX,
General Manager
TERRASOL,
MONTREUIL, FRANCE

Christelle LONGUET,
Engineer,
TERRE ARMEE,
LE PECQ, FRANCE

Summary

Groupe TAI introduced the TechSpan arch system about a decade ago. Since then about 600 structures have been built. This article presents the possible design options and assesses their representativeness. The influence of various parameters on the arch behaviour is studied. A comparison with measurements on a real structures validates the specific approach selected for TechSpan.

1. TechSpan™ structures

TechSpan™ is a prefabricated arch system which is used to replace bridges, install tunnels under fill or in cut and cover situation. Shape is optimised so that the concrete is mainly in compression.

The concept of arch is quite ancient and has been successfully used for centuries for masonry arch bridges or for cast in situ culverts. Groupe TAI revisited the concept in 1986 and launched a three hinge prefabricated system consisting of two pieces [1]. Typical dimensions are 3 to 25 meters in span. Applications are for river crossings under fill, road and railway crossings, covering existing railway in order to save space and reduce noise, and for industrial applications. To date, about 600 TechSpan structures have been built around the world.

2. Shape optimisation

Whilst the arch concept is simple in itself, the actual load history a structure element will undergo while it is transported, erected and then backfilled is far from being simple. A safe structure will call for all the load cases to be designed for. The whole purpose of TechSpan is to optimise the shape in order to minimise the maximum tensile stresses to be resisted by steel reinforcement. This optimum shape obtained by a computer program leads to an economical design. In some instances TechSpan ability to be adapted in shape to the client's special requirement will prove useful in special cases when extending an existing structure for example.

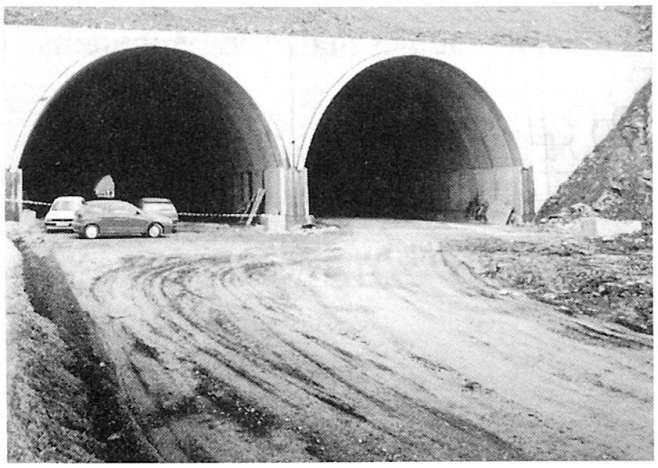

Fig. 1 : Example of a TechSpan

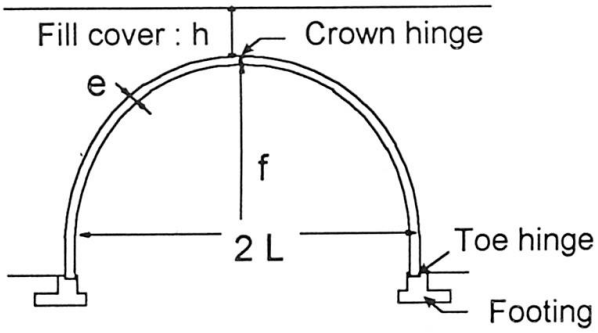

Fig.2 : Typical cross section and notations

In the end the system introduces the reliability and quality of an industrialised process in the geotechnical field, where the geometry, load and soil variability cause each structure to be unique. This uniqueness is accounted for by the shape optimisation, leading to a cost effective solution.

3. Various possible design methods

As for any underground structure, various calculation models can be used for the structural design. But it is well known that the behaviour of buried structures is a problem of soil-structure interaction, as the loads are dependant upon displacements.

The possible design methods can be classified in three categories, for which table 1 summarises the advantages and drawbacks :

- the static analysis, in which the backfill is modelized only by the loads imposed to the structure, without considering soil-structure interactions
- the beam and spring models, where the backfill is modelized both by the loads acting on the structure (assumed value) and by the reactions exerted by the soil on the structure. These reactions are dependant upon the calculated displacements, generally according to a linear elastic behaviour in compression (no tensile reactions), requiring the selection of adequate spring moduli characterizing the soil.

Feature ↓ Model →	Static analysis	Beam & spring model	FEM with DUNCAN model
Soil-structure interaction	NO	Partly	YES
Staged loading	Possible*	Possible*	YES
Compaction effect	Possible*	Possible*	YES
Soil arching Marston effect	NO**	NO**	YES
Arching around the arch	NO	NO	YES
Soil-structure friction	NO	NO	YES
Foundation displacements	NO	Possible*	YES
Non linear soil behaviour	NO	Possible*	YES
Stress dependant modulus	NO	NO	YES
Soil parameters determination	N/A	Difficult (non intrinsic)	Easy (intrinsic)

* Possible but usually not done ** Marston effect not represented by the model, taken into account by a coefficient obtained from an independent computation

Table 1 : Representativeness of possible design methods

- the FEM (Finite Element Method) modelization, in which the soil is modelized as a whole, with its geomechanical parameters (elastic and elastoplastic) : such analysis does not require any additional assumption upon loads acting on the structure and reactions exerted on the structure. Of course, many constitutive laws can be used for soil modelization, but the most accurate for this kind of application appears to be the law presented by Duncan et al. [2].

4. Geomechanical parameters for FEM calculations

The previous table shows that the FEM is the only way to correctly represent all the features governing the soil-structure interaction, and a realistic behaviour of soils. For this reason and after a detailed investigation of the main parameters and their influence on the design, the FEM analysis was chosen as the usual design method for TechSpan.

4.1 Soil modelisation

The model presented by Duncan et Al. [2] was selected for the soil around the concrete arch in the FEM design because it takes into account all the important parameters that affect the behaviour of the structure :

- the stress strain curve is parabolic (Fig. 3)
- the initial modulus depends on the stress
  $E_i = K_i\, p_a\, (\sigma_3/p_a)^n$
  where p_a = atmospheric pressure
- the unload-reload modulus differs from E_i but also depends on σ_3
- the bulk modulus also varies with confining stress : $B = K_p\, p_a\, (\sigma_3/p_a)^m$
- Mohr-Coulomb criteria (c, φ) is used to define the deviatoric stress at failure

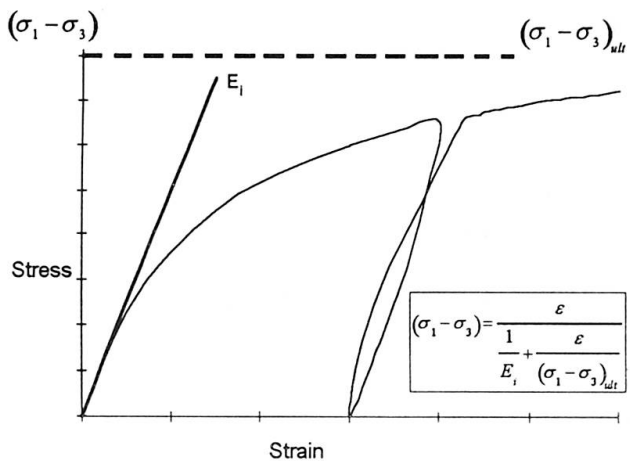

Fig. 3 : Non linear stress-strain curve

Realistic values for the main parameters may be found in the literature. Table 2 presents the recommended values which agree with the various soil and backfill types specified for TechSpan structures. Parametric analysis has shown that the model is numerically stable and that realistic variations around these values have a limited impact on the computed stresses in the elements.

Material	γ kN/m³	ϕ (0)	c kPa	K_i (MPa)	n -	k_b (MPa)	m
Foundation soil	*	*	*	$10.E_I$	0	$0.85.K_I$ (S) $0.55.K_i$ (R)	0
Dense backfill	21	33/36	0	600	0.35	300	0.2
Normal backfill	20	30/33	0	500	0.40	220	0.25
L . compacted	18/19	28/30	0	350	0.45	220	0.25
Non select fill	16/17	25/28	0/25	200	0.6	150	0.4

* : according to geotechnical data S : soils R : rocks

Table 2 : Recommended parameters for TechSpan design

4.2. Construction phase loadings

Final state is normally not the most severe design case. It is important to compute the model for each single construction step or fill layer and within each step to represent the compaction stress applied on the fill, with three sub-steps per layer : fill, compact, remove compaction load.

4.3. K coefficient

The $K = \sigma_h/\sigma_v$ coefficient around the tunnel is one of the main parameters governing the behaviour of the structure, as it characterises the supporting effect of the lateral backfill. While this parameter is an hypothesis in others models, it is a result of the FEM calculations.

It is of major interest to note that, during the different construction stages, K varies widely

- near the footings, K increases from 0.3-0.5 (between K_a and K_o) when backfill is erected up to the top of the vault, to 1.0 (much higher than K_o) for high backfill cover
- near the crown, K decreases from more than 1.5, to 0.6-0.8 (significantly higher than K_o) when backfilling reaches the crown, and then down to 0.4-0.5 (close to K_o) for high backfill cover

Such effect confirms that usual calculation methods cannot modelize the actual behaviour, as they generally consider constant K values (0.3 and 0.5) whatever the stage of backfilling

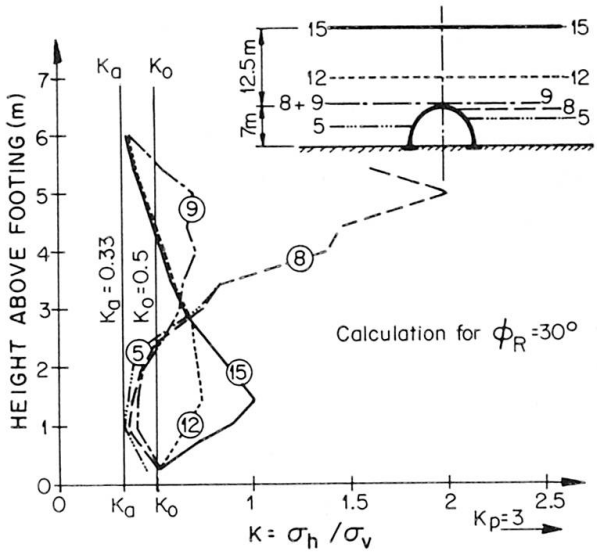

Fig. 4. Variation of K around the arch during backfilling stages

4.4. Marston effect

It is well known that rigid culverts under embankments are loaded by stress σ_v which can be much larger than the overburden pressure γh. This effect known as "Marston effect" [3] [4].is due to the differential settlements of embankment between the zone above culvert and the adjacent zones.

To account for this stress increase, Marston introduced a coefficient such that $\sigma_v = K_M \gamma h$. This coefficient is usually in the range 1.1 to 1.5 and may be as high as 2. Overlooking it in a design may lead to failure. Since this effect is not represented in either the static or the beam and spring model, the Marston coefficient is reintroduced in the system afterwards. Table 3 presents the ratio $\sigma_v/\gamma h$ obtained from the TechSpan FEM model for a given geometry. Flexible structures lead to lower values of K_M and the model is in good agreement with semi-empirical values when the hypothesis are made consistent with Marston's: rigid structure, constant modulus.

TechSpan 0.3. m thick	Rigid TechSpan 1 m thick	Rigid TechSpan Constant E	Semi-empirical Marston coefficient
1.10	1.22	1.30	1.35

Table 3 : Marston Coefficient

5. Comparison between predicted and monitored behaviour

5.1. The Oita TechSpan

Built in Japan in spring 1995, the Oita structure with 11.5 m span and 17.5 m of fill cover offered an interesting case for full scale experimentation. The monitoring was quite complete and included both stresses and displacement measurements in seven cross sections [5]. The measurements were quite consistent for the various section and in this short article we will only report average values.

5.2. Moments in the arch elements

Stress gauges were installed on the steel reinforcement cages in order to estimate the bending moment in the elements. From these steel strains the moment in the precast element may be derived assuming either a cracked or an un-cracked concrete section. Safety normally requires the designer to take the conservative assumption that the concrete will be cracked. This leads to a maximum bending moment of 30 kN.m which is much lower than the result of the analysis.

However the elements are designed and handled in a way that minimises bending moments and the hypothesis that the elements in the completed structure are un-cracked is more realistic. Under this assumption the measured moment in the element reaches 110 kN.m as a maximum. This is in very good agreement with the moment obtained from the Finite Element Method.

It must be noted that the shape and maximum value of the moment is not much affected by the E value selected for the concrete in the usual range (20 GPa to 36 GPa). Moment derived from other methods lead to unrealistic values (Table 4). Note that the asymmetric shape of the moment envelope corresponds to the asymmetric stress history during the backfilling stages.

Calculated maximum bending moment				Measuring bending moment	
Static analysis	Beam and spring	FEM $E_i = 36$ GPa	FEM $E_i = 20$ GPa	Un-cracked section	Cracked section
500 kN.m	150 kN.m	115 kN.m	105 Kn.m	110 kN.m	30 KN.m

Table 4 : Calculated and measured maximum bending moment in TechSpan

5.3. Deflection

Fig. 5 presents the measured vertical displacement at the crown (DY3) along with the value predicted with the finite element model. The FEM program was run with two sets of input : the standard properties with concrete stiffness of $E_c = 20$ GPa and no cohesion in the backfill and a second set with $E_c = 36$ GPa and C = 20 kPa. The second set leads to very representative results and should really be used when short term prediction is required. The standard set is more representative of long term. Both sets lead to deflection within a few millimetres of measurements and the impact of these parameters is small on the reinforcement design.

The shape of the curves is interesting as it shows that the elements will breath up and down during the backfilling to return close to an undeformed state for the completed structure. The corresponding moments (either from measurement or FEM) are much reduced. The fact that the permanent state of stress of the element is much smaller than the maximum for which it was designed leads to enhanced durability and long term safety.

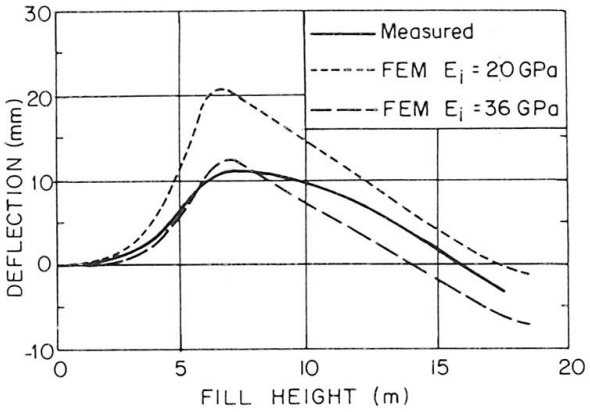

Fig. 5 : Computed and measured deflections

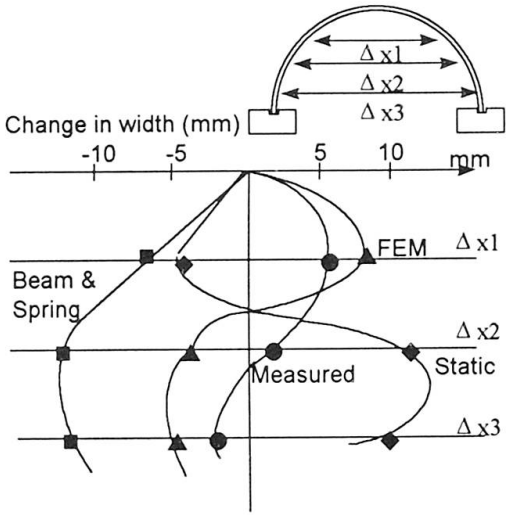

Fig. 6 : Measured and producted convergences for various design approaches

5.4. Lateral displacements

Fig. 6 presents the convergence or change in width of the structure at three elevations above footing for the final stage. Only the FEM study gives realistic values for these deformations while the beam and spring and the simple static model lead to results very different from measurements.

6. Conclusion

The soil interaction phenomenon's are taken into account in TechSpan up to the point that the shape of the structure is optimised accordingly. This specificity of TechSpan would be meaningless without its FEM design method. This method is the only one capable of representing the soil structure interaction phenomenon developing during the various phases of construction.

The parameters to be used in the method have been presented and the sensitivity of the results to variations of these parameters discussed. In the end the comparison with the monitoring of the Oita structure validates the method which was the only one to predict adequately the structure behaviour both in stresses and displacements, during construction phases and for its finished state.

Bibliography

1. SMITH R.J.H., "Development of a precast arch system" International Conference on Arch bridges - Bolton, UK. September 1995.
2. DUNCAN J.M., BYRNE P., WONG K., MARBY Ph., "Strength, stress-strain and bulk modulus parameters for FEM", Report UCB/GT/80-01, Univ. of Cal. Berkeley, 1980.
3. CLEMENT Michel, JEAN Pierre, "Ouvrages voûtés sous remblai - Pose en dépression", Rev. Ouvrages d'Art n° 21 SETRA-CTOA, France, Juillet 1995
4. LONG Nguyen Thanh, VEZOLE Pierre, "Ouvrages sous remblai - Pneusol et maîtrise des charges verticales", Annales ITBTP n° 515, Juille-Août 1993.
5. JENKINS D.A. "Analysis of Buried Arch Structures. Performance versus Prediction " CIA Conference, Adelaide, Australia, May 1997.