Zeitschrift: IABSE reports = Rapports AIPC = IVBH Berichte
Band: 77 (1998)

Artikel: Damages and rehabilitation of the orthodox cathedral in Belgrade
Autor: Pakvor, Aleskandar / Muravljov, Mihailo
DOI: https://doi.org/10.5169/seals-58252

Nutzungsbedingungen
Die ETH-Bibliothek ist die Anbieterin der digitalisierten Zeitschriften auf E-Periodica. Sie besitzt keine Urheberrechte an den Zeitschriften und ist nicht verantwortlich für deren Inhalte. Die Rechte liegen in der Regel bei den Herausgebern beziehungsweise den externen Rechteinhabern. Das Veröffentlichen von Bildern in Print- und Online-Publikationen sowie auf Social Media-Kanälen oder Webseiten ist nur mit vorheriger Genehmigung der Rechteinhaber erlaubt. Mehr erfahren

Conditions d'utilisation
L'ETH Library est le fournisseur des revues numérisées. Elle ne détient aucun droit d'auteur sur les revues et n'est pas responsable de leur contenu. En règle générale, les droits sont détenus par les éditeurs ou les détenteurs de droits externes. La reproduction d'images dans des publications imprimées ou en ligne ainsi que sur des canaux de médias sociaux ou des sites web n'est autorisée qu'avec l'accord préalable des détenteurs des droits. En savoir plus

Terms of use
The ETH Library is the provider of the digitised journals. It does not own any copyrights to the journals and is not responsible for their content. The rights usually lie with the publishers or the external rights holders. Publishing images in print and online publications, as well as on social media channels or websites, is only permitted with the prior consent of the rights holders. Find out more

Download PDF: 06.02.2026

ETH-Bibliothek Zürich, E-Periodica, https://www.e-periodica.ch

Damages and Rehabilitation of the Orthodox Cathedral in Belgrade

Aleksandar PAKVOR
Professor
University of Belgrade
Belgrade, Yugoslavia

Aleksandar Pakvor, born 1934,B.Civ.Eng.,M.Sc.,Ph.D., University of Belgrade. Engaged at the Faculty of Civil Engineering in teaching, research and professional activities dealing with concrete structures, serviceability limit states, recycled concrete, maintenance, repair and strengthening of structures.

Mihailo MURAVLJOV
Professor
University of Belgrade
Belgrade, Yugoslavia

Mihailo Muravljov, born 1937, B.Civ.Eng.,M.Sc.,Ph.D., University of Belgrade. Engaged at the Faculty of Civil Engineering in teaching, research and professional activities dealing with building materials, concrete technology, recycled concrete, maintenance, repair and strengthening of structures.

Summary

The Belgrade Orthodox Cathedral, made of brick in lime mortar 150 years ago has the ceiling structure of its central part supported by longitudinal walls composed of lateral brick arches with steel ties at the level of the vertex and of shallow vaults between them. Loosening of steel ties through loosening of their anchorage in longitudinal walls, caused structural damages of arches, especially of their upper chords together with large deflections. The rehabilitation included the production of additional prestressed ties whereby the disturbed system of arches with ties has been reestablished. At the same time, inconvenient stresses in the arches have been corrected to a certain degree. The strengthening of the sections of the arches has been made by additional recycled masonry concrete elements compatible with the materials of the arches.

The Belgrade Orthodox Cathedral is of a rectangular shape in its base with a semi-circular altar. It is 18.8m wide and 43.8 m long, built of brick in lime mortar with a wooden roof. The ceiling of the central part is composed of four lateral ellipse-shaped arches made of brick with the steel ties.

After detailed inspection, the conclusion has been made that the basic cause of structural damages is the loosening of steel ties of the lateral brick arches in the ceiling, because they have been partially pulled out due to loosening of their anchorages in longitudinal walls.

The solution for rehabilitation included the following: (a) building in a pair of prestressed steel ties ϕ 36mm on every arch whereby the forces of approximately 200 kN would be inserted into the structure; (b) production of concrete anchor blocks for the new ties; (c)

making the strengthening on extradoses in the arch vertexes zones in the shape of "П" elements bonded with the existing arches.

The Figure 1 shows the vertical section of an arch whereat the height position of additional ties, as well as several specific details.

It has been decided to make "П" - shaped strengthenings of recycled brick concrete which will be so modelled as to achieve the composite with the properties which will, to a suitable extent, be compatible with the properties of the materials within the existing arches.

In order to obtain the material to meet the mecesaru conditions, four mixtures have been treated the compositions of which are presented in the next table.

Composite	Quantities of the material (kg/m3)				Bulk density (kg/m3)	
	Cement	Hydrated lime	Aggregate	Water	Design	Actual
1	200	200	1300	350	2050	1960
2	300	100	1250	400	2050	2120
3	400	0	1200	450	2050	2030
4	450	0	1150	450	2050	2090

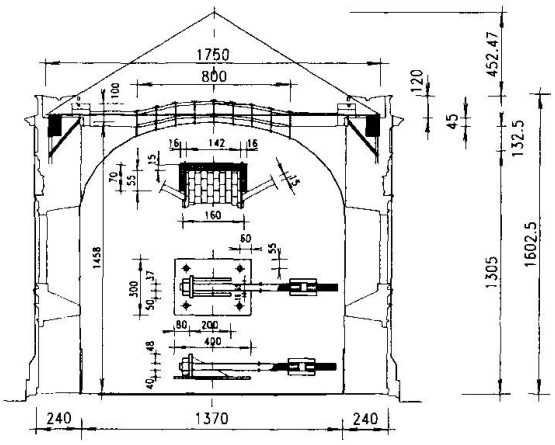

Fig. 1 Additional ties in arches including specific details

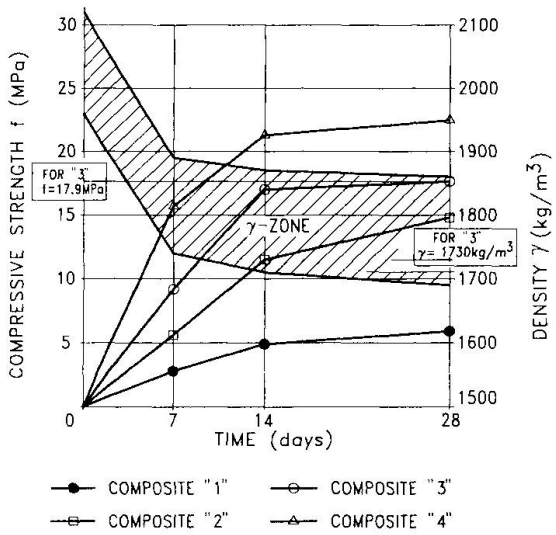

Fig. 2 Bulk densities and compressive strengths of all composites

The presentation of bulk densities and of compressive strengths of all investigated composites - concretes - at the ages of 7, 14 and 28 days is given in Figure 2. As it is obvious, the optimum meeting of the set conditions is achieved by the mixture - composite marked by number 3.

Being made of recycled masonry concrete, the additional "П" elements are compatible with the basic material of the arches whereby a structural system has been obtained containing no outstanding material discontinuities and non-homogeneities that could cause inconvenient states of stresses within the structures which, in some localities have already reached the ultimate limit state.