Zeitschrift: IABSE reports = Rapports AIPC = IVBH Berichte
Band: 999 (1997)

Artikel: Prefabrication and prestressing of concrete slabs in composite bridges
Autor: Placidi, Michel / Virlogeux, Michel / Berthellemy, Jacques
DOI: https://doi.org/10.5169/seals-1015

Nutzungsbedingungen
Die ETH-Bibliothek ist die Anbieterin der digitalisierten Zeitschriften auf E-Periodica. Sie besitzt keine Urheberrechte an den Zeitschriften und ist nicht verantwortlich für deren Inhalte. Die Rechte liegen in der Regel bei den Herausgebern beziehungsweise den externen Rechteinhabern. Das Veröffentlichen von Bildern in Print- und Online-Publikationen sowie auf Social Media-Kanälen oder Webseiten ist nur mit vorheriger Genehmigung der Rechteinhaber erlaubt. Mehr erfahren

Conditions d'utilisation
L'ETH Library est le fournisseur des revues numérisées. Elle ne détient aucun droit d'auteur sur les revues et n'est pas responsable de leur contenu. En règle générale, les droits sont détenus par les éditeurs ou les détenteurs de droits externes. La reproduction d'images dans des publications imprimées ou en ligne ainsi que sur des canaux de médias sociaux ou des sites web n'est autorisée qu'avec l'accord préalable des détenteurs des droits. En savoir plus

Terms of use
The ETH Library is the provider of the digitised journals. It does not own any copyrights to the journals and is not responsible for their content. The rights usually lie with the publishers or the external rights holders. Publishing images in print and online publications, as well as on social media channels or websites, is only permitted with the prior consent of the rights holders. Find out more

Download PDF: 17.01.2026

ETH-Bibliothek Zürich, E-Periodica, https://www.e-periodica.ch

Prefabrication and Prestressing of Concrete Slabs in Composite Bridges

Michel PLACIDI
RAZEL
Le Christ de Saclay, France

Michel VIRLOGEUX
Consulting Engineer
Bonnelles, France

Jacques BERTHELLEMY
SETRA
Bagneux, France

SUMMARY

This paper describes the different solutions developed or proposed in France to precast and prestress slabs in composite bridges, aiming at reducing tensile zones and limiting cracks under permanent loads. Slabs have not been prestressed in the practical applications due to the economical competition with reinforced slabs cast in situ, since the improvement in quality produced by longitudinal prestressing has not yet been recognized.

1. INTRODUCTION

In most composite bridges, the slab is directly cast in situ on the steel structure, sometimes with a concreting sequence organized to reduce tensile zones. This solution is extremely efficient from an economical point of view but it has some drawbacks, limiting the participation of the slab to composite action and producing cracks in the tensile zones of the slab.

1.1 Shrinkage and thermal effects.

Since the slab is directly concreted on the steel structure, all effects which produce shortening are restrained by the upper members of the steel structure and result in tensile stresses - and cracks - in the concrete slab. Specialists divide concrete shrinkage into three parts :

- thermal shrinkage, which results from the increase in temperature during concrete hardening, produced by cement hydratation, and from the later return of hardened concrete to outside temperature ;
- autogenous shrinkage, which directly results from the effect on concrete volume of cement hydratation ;
- drying shrinkage, which results from evaporation of water in hardened concrete.

These effects have been often underestimated in concrete slabs of composite bridges, since engineers frequently refered to classical evaluations of shrinkage made for prestressed concrete structures in which the first two parts have no, or practically no, effect.

Of course, the unfavorable effects of shrinkage can be limited by a reduction of the cement ratio in concrete (on condition to have a perfectly constant quality of cement) and of the water to cement ratio. A careful curing of fresh concrete - for example with humid blankets - and a late removal of shutters also help limiting shrinkage effects, but these provisions are often forgotten under the pressure of cost. A last provision, adopted in some countries, consists in slightly heating the steel member during concrete hardening.

1.2 Structural effects.

Engineers perfectly know the structural effects of the concreting sequence : tensile zones can be reduced upon supports when concreting in the spans in a first step. But, for simplicity, erection steps are frequently computed with the long term modulus of elasticity of concrete, forgetting the slow development of creep. This can result in an underestimation of tensile stresses during erection, and in an increase in crack opening [6].

1.3 Evolution of requirements

The French Administration - SETRA - considered that previous requirements on concrete slabs were not enough conservative and could not prevent the development of cracks more open than acceptable for a high durability. Michel VIRLOGEUX decided to publish a recommendation which was later written under the direction of Thierry KRETZ [7]. In addition to practical specifications, the longitudinal reinforcement ratio, which was equal to 1 % in the tensile zones, has been increased on more scientific bases, with a minimum value on the whole length of slabs including the zones under supposed compression.

Diameter of reinforced bars (mm.)		14	16	20	25
Minimum ratio (%)		0,80	0,86	0,99	1,10
Extreme S.L.S. stress (MPa)	without transverse prestressing	320	280	240	200
	with transverse prestressing	240	200	180	160

The reinforcement ratio does not reach the high values specified in some other codes but looks acceptable considering the French experience. We can only regret :

- the extremely unfavorable conditions made for transverse prestressing, which do not consider the adopted technology and the effective influence of cracks on the durability of transverse tendons ;
- and the fact that the minimum reinforcement ratio is also to be applied to slabs made from precast elements when a more scientific analysis would lead to smaller values.

2. SLABS MADE FROM PRECAST ELEMENTS

2.1 Principle and structural effects.

The slab can be made from precast elements, whatever is the structural system for the bridge : with two parallel steel I-girders and cross-beams; resulting in a two web box-girder; with multiple parallel steel I-girders and cross-beams ; with two parallel steel I-girders and floor-beams

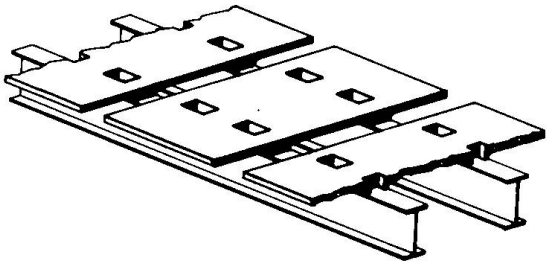

Fig.1 : *Precast slab elements on a steel structure made of two I-shaped beams*

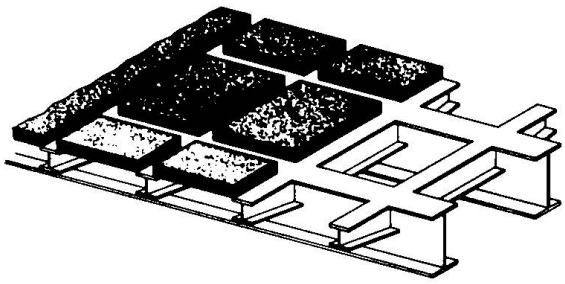

Fig. 2 : *Precast slab elements on a steel structure with floor-beams*

In all cases, tensile stresses produced in the slab by its selfweight can be totally eliminated by a convenient construction sequence (when installing all slab elements before connecting them to the steel structure). And creep has practically no influence on the stress distribution if the sequence is conveniently selected.

2.2 Principle and structural effects.

The use of precast slab elements has the great advantage of eliminating the influence of thermal effects and of early shrinkage (including the largest part of autogenous shrinkage); but evidently there is no advantage at all for the second phase concrete, poured in the joints between slab elements or in pockets when connection is made through pockets. The effects of shrinkage are even increased in the second phase concrete due to the additional restrain produced by the precast slab elements.

This is why the second phase concrete must be selected for a limited shrinkage - through a limited ratio of cement, and through a low water / cement ratio -, and for a high tensile strength. Some specific research must be made in this direction. If successful, it could allow for a limitation of the minimum reinforcement ratio in zones under compression, to take advantage of the elimination of the structural influence of early shrinkage and thermal effects in hardening concrete. Of course second phase concrete must be conveniently cured and protected as for cast in situ slabs.

2.3 Watertightness.

Special provisions must be taken to avoid any concrete leakage between the steel structure and the precast elements, specially at the wet joints between elements or at the pockets. These provisions must also produce a perfect corrosion protection of the steel structure where the slab elements just rest on it. These results could be provided by small plastic joints compressed between steel and concrete by the weight of the precast elements, and by an injection of some adapted product between the steel members and the concrete slab, after closing joints and filling pockets.

2.4 Match-cast elements

Some engineers considered the use of precast slab elements assembled with dry joints and prestressing tendons. Prestressing tendons are necessary since no reinforcement bar can pass through the joints. Clearly, the slab elements are to be match-cast and glued ; surprisingly, this was not the case for the single application of this idea on the A8 motorway [3], with pockets for the connection between slab and steel structure.

But the most interesting question concerns the use of prestressing.

3. USE OF PRESTRESSING IN SLABS OF COMPOSITE BRIDGES

3.1 Connection before or after tensioning tendons.

This example of slabs made from match-cast slab segments clearly evidences the main problem : if the connection between the slab and the steel structure is made before tensioning the longitudinal tendons, a large part of prestressing forces is lost immediately in the steel structure and some more later with creep effects ; thus it appears much more interesting to tension longitudinal tendons before connecting the slab to the steel structure ; all prestressing forces will pass in concrete with a limited transfer, later, with the development of creep. This is why we shall not consider at all, in this paper, solutions with longitudinal prestressing tendons tensioned after connection between concrete and steel (for example for cast in situ slabs), but only the case of precast slabs prestressed before their connection to the steel structure.

3.2 Advantages of longitudinal prestressing.

Longitudinal prestressing - when introduced before the connection between concrete and steel - has two advantages :

- first, the slab can have a composite action on the whole length of the bridge, at least under permanent loads (with equipments) and frequent loads (frequent live loads) ;
- and, consequently, the structure durability is increased by eliminating cracks under permanent loads.

In addition, prestressing slabs in composite bridges produces distributions of stresses in concrete which are similar to those in classical prestressed concrete bridges. We don't think, here, in terms of code but of philosophy. In prestressed concrete structures, we try to balance permanent loads with prestressing effects to reduce creep-induced deflection and to increase durability. We accept no tensile stresses under permanent loads (but accept them under extreme SLS loads, in the widely accepted theory of partial prestressing), nor main cracks.

But solutions have to be developed to introduce longitudinal prestressing in slabs of composite bridges without increasing the cost or complicating erection. This paper aims at describing the ideas proposed so far, even if some of them have been applied without longitudinal tendons.

3.3 The Swiss experience.

More than twenty years ago, Swiss engineers developed the idea of a prestressed concrete slab incrementally launched on the steel structure [1,2]. The slab, precast and prestressed by segments 15 to 25 meters long, is equipped with pockets for a later connection. When the slab has been launched (being prestressed), Nelson studs are welded in the pockets and pocked are filled with concrete to produce the connection.

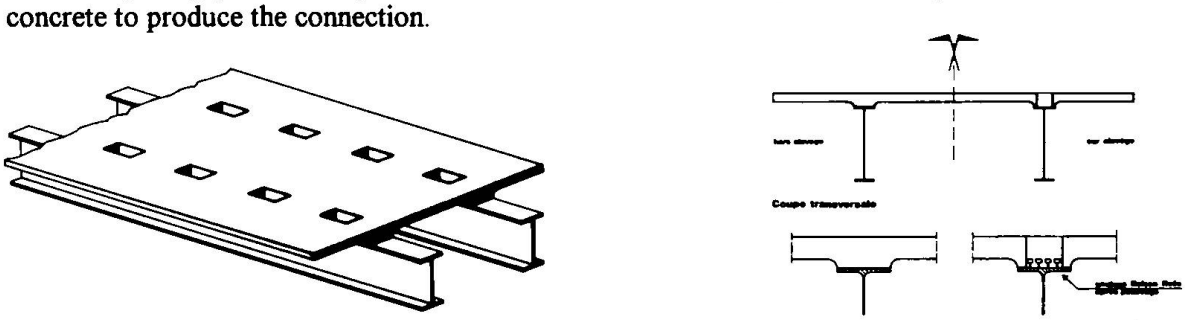

Fig. 3 : *A precast concrete slab launched on the steel structure with pocket, to later weld Nelson studs.*

This solution has been abandoned after an accident which was by no way a real drawback of the idea.

3.4 Ideas derived from the Swiss experience

Jean Claude FOUCRIAT proposed, for the bridge of the A75 motorway over the river Truyère, at Garabit, a solution with a slab stiffened by two longitudinal ribs above the members of the steel structure. This slab was to be launched on the steel structure on a series of concrete blocks extending the concrete ribs ; a steel plate was at the basis of each block, connected to it through Nelson studs. After launching, the steel plates connected to the concrete slab were to be welded to the steel structure below, completing the desired connection. But this solution left a series of holes between the concrete slab and the steel structure below (Fig. 4, [3,4]).

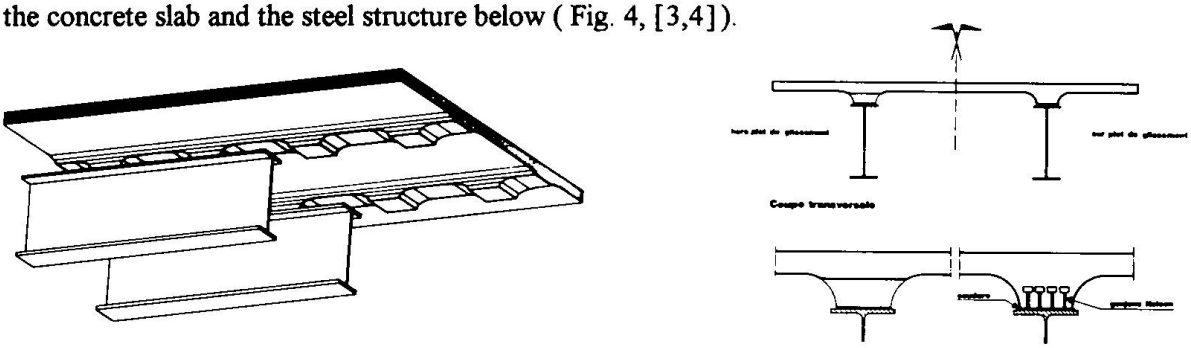

Fig. 4 : *The solution proposed for the bridge over the river Truyère at Garabit.*

Spie Batignolles and Richard Ducros improved the solution in their offer for the erection of this bridge (finally built in prestressed concrete), with continuous ribs each of them resting on a continuous steel plate connected to the concrete slab with Nelson studs ; after launching, the steel plate connected to the concrete slab was to be welded to the steel structure below to complete connection (Fig. 5 [3,4]).

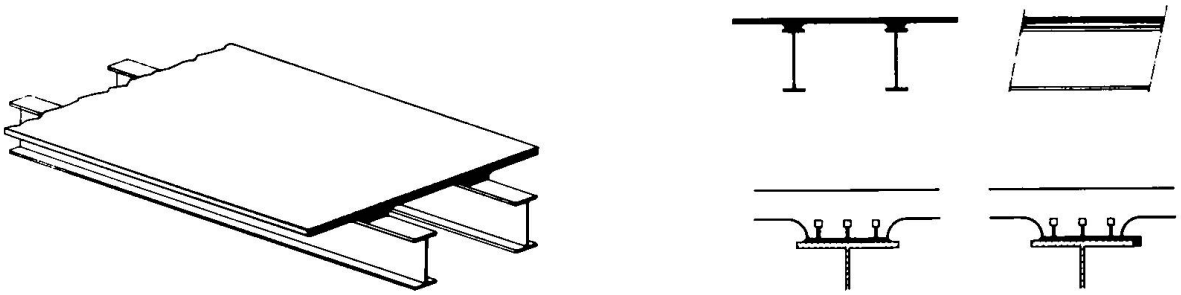

Fig. 5 : *A precast concrete slab precast on two steel plates, with a later welding to the steel structure below.*

This idea has been proposed some years later by RAZEL and Michel PLACIDI, for the Douy Viaduc on the Colioures by-pass. But this solution has been rejected by Joel RAOUL and Thierry KRETZ considering the geometrical tolerances which could prevent welding the two plates together ; in addition, they considered that transverse bending moments could not be transfered from the concrete slab to the steel I-girder through the two corner welds connecting the two superposed plates. Michel VIRLOGEUX and Michel PLACIDI then separately proposed very similar solutions, leaving a channel in the concrete slab above the members of the steel structure already equiped with connectors, Nelson studs or other (Fig.6 [4]).

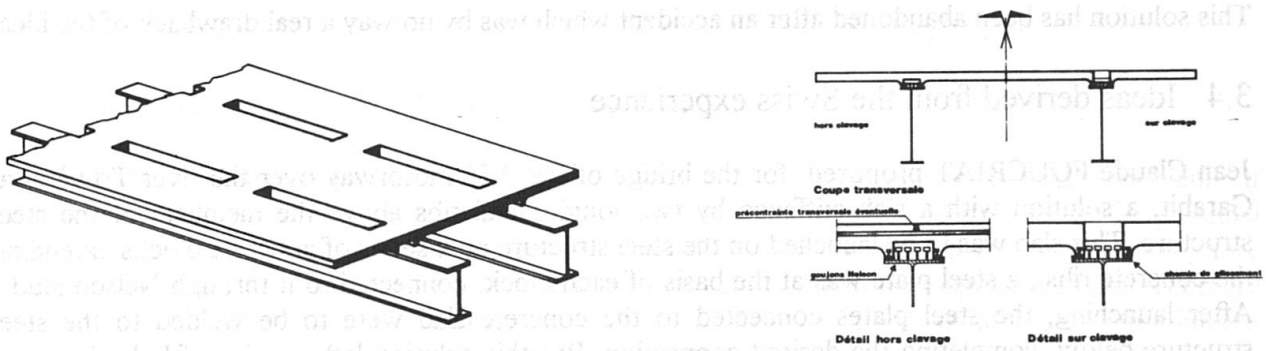

Fig. 6 : *A precast concrete slab precast with a channel over the Neson studs and pockets for reinforcing and conreting.*

In the Michel Placidi's design, the concrete slab elements are independent, transversally, only connected by reinforcement bars rigid enough to control transverse deflections (Fig.7)

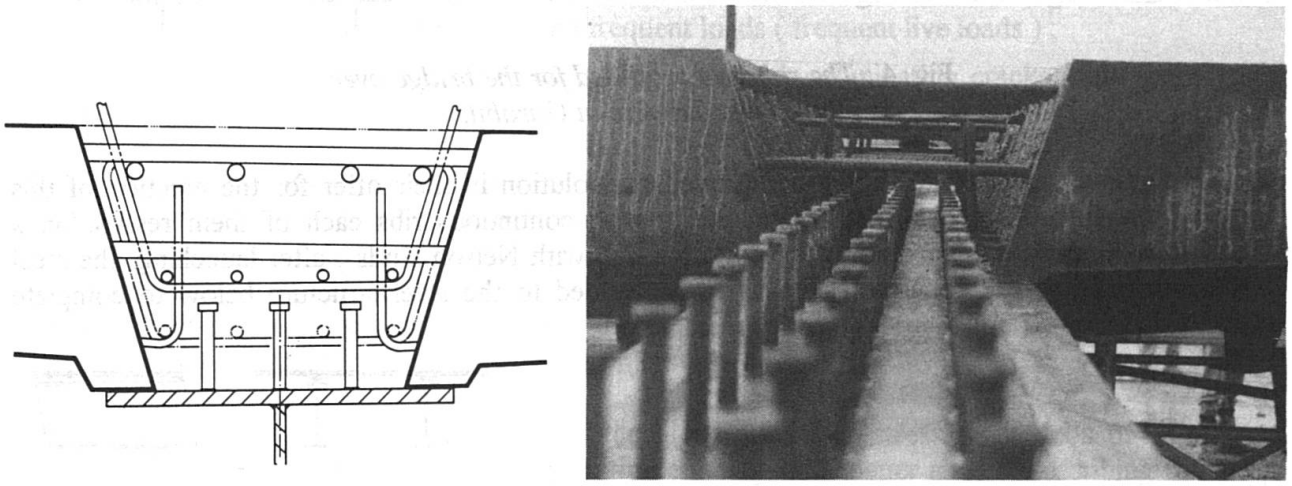

Fig.7 : *A precast concrete slab in independent elements, transversally connected by reinforcement bars.*

RAZEL and Michel PLACIDI built that way the access spans to the mobile bridge over the Tancarville Canal, on the A29 motorway.

But once more Joel RAOUL pointed at drawbacks, evidencing that geometrical tolerances could produce unacceptable effects in the welds between the upper member and the web of the steel structure, when all the load of the concrete slab passes at only one of the two edges of the upper member. Michel VIRLOGEUX concluded that the concrete slab has to be supported during launching by two vertical plates, one on top of each of the two webs of the steel structure below.

This idea was improved and developed by Michel PLACIDI (Fig. 8), and five bridges have been built that way by RAZEL these last years : the viaduct over the National Highway 6 and the PLM railway lines at Varennes-les-Mâcon [8] ; the bridge over the river Fier, at Annecy ; the bridge over the river Orne, at Caen ; the bridge over the river Allier at Brioude and the bridge over the railway lines at Lisieux ; a sixth one is being built, also at Lisieux, over the river Orbiquet.

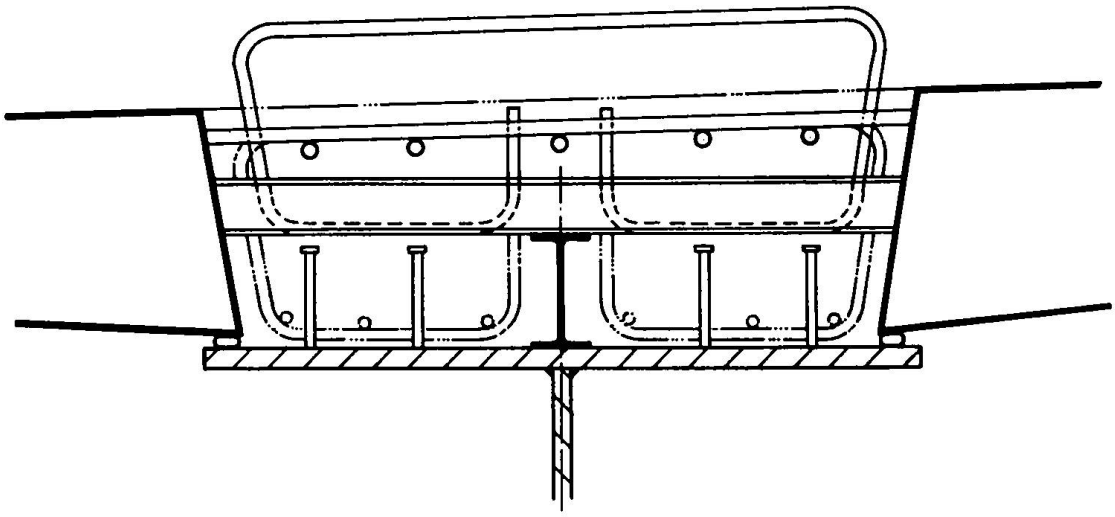

Fig. 8 : *In this solution, independent elements of the precast slab, connected by steel beams, are supported by vertical plates.*

Unfortunately, none of these bridges received longitudinal prestressing, though it would have been very easy to introduce some : the owners were not convinced of the interest of longitudinally prestressing the slab to increase quality and durability, and did not accept the very small increase in cost that it would have required.

3.5 Transverse prestressing

All the bridges built by RAZEL, except the access spans to the mobile bridge over the Tancarville Canal, received transverse prestressing. For the Varennes-les-Mâcon, Annecy, Brioude and Lisieux bridges, this prestressing is made of a series of pairs of individually protected monostrands of 15 millimetres, at about 0,80 metre intervals ; the corresponding cost is balanced by the reduction in the reinforcement ratio, from about 250 to 180 - 190 kg/m^3. For the bridge over the river Orne, which is very wide, the slab is transversely ribbed at 1,50 metre intervals ; and each transverse rib is prestressed by one tendon made of four strands of 15 millimetres, injected with cement grout in a classical duct.

We can only regret - in addition to the lack of longitudinal prestressing - that the new French specifications led to an increase in the longitudinal reinforcement of the last four bridges (over the river Orne, at Brioude, and the two bridges at Lisieux) without really scientific bases.

4. CONCLUSION

As a conclusion, we strongly believe in the improvements which could be produced by longitudinally prestressing the concrete slabs of composite bridges before their connection to the steel structure, as regards quality and durability. Evidently, solutions must be developed to introduce prestressing forces efficiently at a low cost, with simple techniques and a limited equipment. After many hesitations between different solutions, it appears that one is being efficiently developed by RAZEL to launch a prefabricated concrete slab on the steel structure of a composite bridge, allowing for an easy and economical introduction of longitudinal tendons in the slab before its connection to steel. Prestressing the slab would probably cost a bit more than just reinforcing it, but we consider this cost limited as compared to the improvement in the bridge quality and durability.

Clearly, this will by no way reduce the economical competitiveness of composite solutions : in the present conditions, and for spans between 40 and 80 to 100 metres, composite bridges are cheaper

than prestressed concrete bridges by 5 to 10 %, except when the size of the structure to build is so large that the cost of concrete can be seriously reduced, or when local conditions forbid the erection techniques adapted to the construction of a composite structure.

In such a situation, a possible increase in quality is an advantage for composite structures which will appear to owners, more and more concerned with low maintenance costs.

REFERENCES

[1] DUBAS P. : Problèmes relatifs à la conception et à la réalisation des ponts mixtes acier-béton . Revue technique luxembougeoise , octobre - décembre 1978 , pp. 7-12.

[2] BADOUX J. : L'évolution des ponts mixtes en Suisse ces vingt dernières années . Annales de l'I.T.B.T.P. n°431 , 1985 , pp. 35-44.

[3] VIRLOGEUX M. : Les ponts mixtes associant l'acier et le béton précontraint . Bulletin Ponts Métalliques n°15 , 1992 , O.T.U.A., pp. 25-68.

[4] VIRLOGEUX M. : Durabilité des dalles des ponts mixtes . Bulletin Ponts Métalliques n°16 , 1993 , O.T.U.A., pp. 87-94.

[5] FLOURENS B. ; JOASSARD I. : Etude de la fissuration du Viaduc de la Violette . Bulletin Ponts Métalliques n°16 , 1993 , O.T.U.A., pp. 96-102.

[6] BERTHELEMY J. ; KRETZ Th. ; LE BOULCH J.L. ; VACHIN B. ; MANYA B. : Bétonnage du hourdis du Viaduc de Caramany . Suivi de la fissuration de la dalle en phase de construction . Bulletin Ponts Métalliques n°16 , O.T.U.A., pp. 103-109.

[7] PONTS MIXTES - Recommandations pour maîtriser la fissuration des dalles . Service d'Etudes Techniques des Routes et Autoroutes , 1995.

[8] PETIT G. ; PLACIDI M. : Viaduc de Varennes-les-Mâcon , Ouvrages d'Art , Service d'Etudes Techniques des Routes et Autoroutes , juillet 1995 , pp. 3-7.