Zeitschrift: IABSE reports = Rapports AIPC = IVBH Berichte
Band: 999 (1997)

Artikel: Concepts and details of mixed timber-concrete structures
Autor: Natterer, Julius
DOI: https://doi.org/10.5169/seals-964

Nutzungsbedingungen
Die ETH-Bibliothek ist die Anbieterin der digitalisierten Zeitschriften auf E-Periodica. Sie besitzt keine Urheberrechte an den Zeitschriften und ist nicht verantwortlich für deren Inhalte. Die Rechte liegen in der Regel bei den Herausgebern beziehungsweise den externen Rechteinhabern. Das Veröffentlichen von Bildern in Print- und Online-Publikationen sowie auf Social Media-Kanälen oder Webseiten ist nur mit vorheriger Genehmigung der Rechteinhaber erlaubt. Mehr erfahren

Conditions d'utilisation
L'ETH Library est le fournisseur des revues numérisées. Elle ne détient aucun droit d'auteur sur les revues et n'est pas responsable de leur contenu. En règle générale, les droits sont détenus par les éditeurs ou les détenteurs de droits externes. La reproduction d'images dans des publications imprimées ou en ligne ainsi que sur des canaux de médias sociaux ou des sites web n'est autorisée qu'avec l'accord préalable des détenteurs des droits. En savoir plus

Terms of use
The ETH Library is the provider of the digitised journals. It does not own any copyrights to the journals and is not responsible for their content. The rights usually lie with the publishers or the external rights holders. Publishing images in print and online publications, as well as on social media channels or websites, is only permitted with the prior consent of the rights holders. Find out more

Download PDF: 27.11.2025

ETH-Bibliothek Zürich, E-Periodica, https://www.e-periodica.ch

Concepts and Details of Mixed Timber-Concrete Structures

Julius NATTERER
Professor
Swiss Fed. Inst. of Technology
Lausanne, Switzerland

Julius Natterer, born 1938.
In 1970, he founds his own office specialized in timber construction first in Munich, then in 1983, in Switzerland.
In 1978, he is named director of the Chair of Timber Construction of the Swiss Federal Institute of Technology in Lausanne
He is the author of several publications in timber engineering.

Summary

Buildings can be erected using timber in the floor in order to be more economical and lighter than conventional concrete constructions. For a span of three to six meters, timber floors made of vertical nailed planks are built. For a span of seven to fifteen meters, this kind of timber floor is connected to a concrete deck and becomes a composite wood-concrete system. In this case, the shear strength is taken by a groove in timber filled with concrete. The timber part can be made of planks, roundwood, glued laminated timber, regarding the expected aspect of the ceiling.

1. Introduction

Given the constant decrease in energy resources and the new consideration of environmentals parameters, a way for an increasing use of wood in the construction is open. But the wood construction should not remain sectarian. In order to be economical, it must work together with other materials, traditionally used in construction. In the history of timber construction, there have always been composite constructions – timber frameworks with glue or mortar, walls of stone and bricks – the most lasting oneswere in timber architecture. Examples from China and Japan to Frank and Alsacian framework constructions are well known. Essential criteria are a better behavior of the whole construction during a fire, as well as acoustics and vibration properties. Today, quality criteria – fire, acoustics, vibration – are easily fulfilled through new shape applications, i.e. massive nail laminated floors and wood-concrete composite systems for wide-span and load supporting structures. Nail-laminated decks and wood-concrete decks including a load-bearing concrete slab present new advantages, especially for houses, schools and public buildings. Thanks to these techniques, the steadiness and bending properties of structures with minor dead loads can be economically fulfilled. Fire resistance times of 30, 60 or 90 minutes, as well as phonic insulation criteria up to 60 dB for walls and decks can be reached. The use of timber as construction material is the only way to save the world's forests. Timber use is directly linked to forest conservation and the planting of new trees.

The material selection is no proof for "good architecture". It is, however, an important contribution to the environmental conservation, even if it needs more concentration on the planing phase.

2. Vertical Nailed Planks

The system of vertical nailed planks has been one of the new techniques developed for several years at the Chair of Timber Construction at the Swiss Federal Institute of Technology, in Lausanne (EPFL). Several projects have been realized within the last years with this new method. This technique certainly matches to the requirements of modern constructions. The system is made of planks which are vertically nailed to each other (figure 1) and resulting into a plane surface.

These elements may be used without concrete for structural purposes, such as supporting walls, floors (ceilings) and sloping roofs (figure 2). Depending on the broad requirements, the planks may be either kept as raw material or painted, or covered with wall paper, or

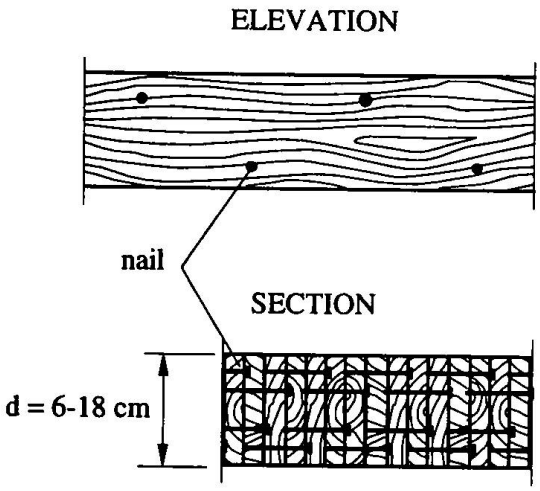

Fig. 1 - Nailing pattern for element construction.

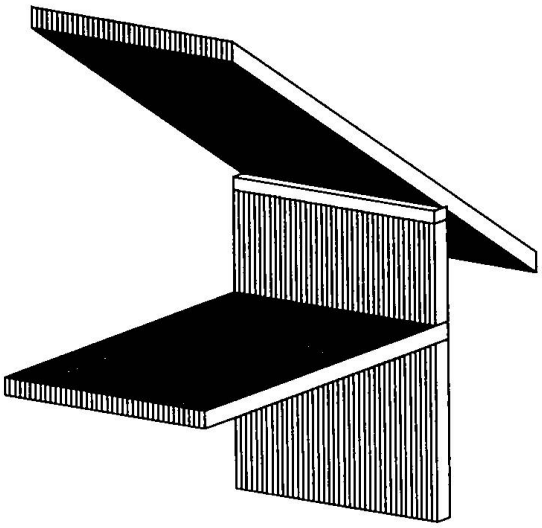

Fig. 2 - Construction in vertical nailed planks.

anything else. High acoustical demands may be satisfied with the manufacture of special profiles, as shown in Figure 3 for ceiling elements. Various solutions which do not requise the use of special tools are available to manufacture noise absorbers. For instance, a few millimeters shift of one out of two planks may be enough for the purpose aimed at. Architectural needs may also be a factor which be considered when proposing solutions.

Figure 4 shows threesolutions out of many others which are available for floors made out of vertical nailed planks; acoustic insulation may be required, so as impact noise reduction or higher thermal inertia for the system. There are plenty of solutions and we must keep in mind that they may be directly used with this new support, provided that they are set up with respect to the wood material.

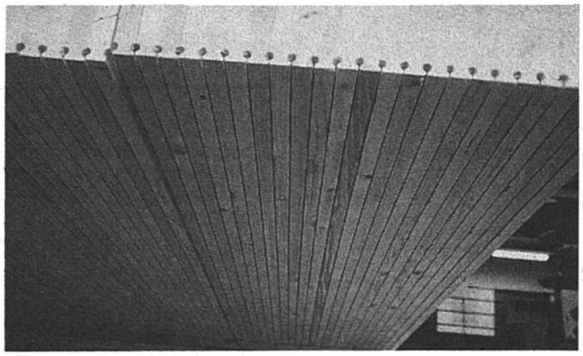

Fig. 3 - Prefabricated vertical-nailed planks elements with an acoustic profile.

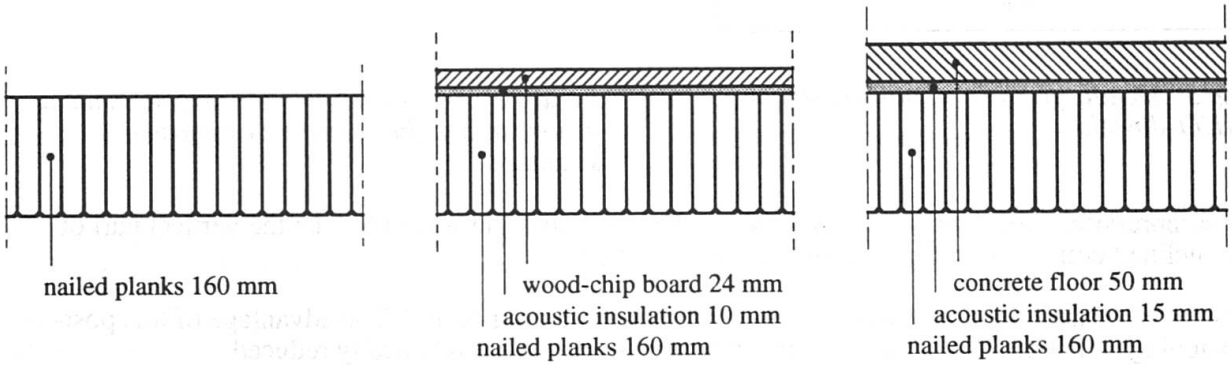

Fig. 4 - Examples of vertical nailed planks floor with different cover layers depending on specific requirements.

3. The Technique of Composite Structure

The timber-concrete composite structure is a system where the shuttering is directly included into the bearing part of the system. In this configuration, timber elements are covered by concrete, so that each component will efficiently work: timber in tension and concrete in compression.

In order to use the composite structure with high performances, it is important that concrete and timber are linked together with a connection as rigid as possible. In this case, the link between the two components is done with a system of grooves in the wood and post-tensioned dowels (figure 5).

The tests have shown that the link between the two materials does not depend on the rigidity of the link, but only on the position and the repartition of the grows. With this consideration, the efficacy of the liaison can be taken from 85 to 90 % of the composite effect.

Calculations for designing simply supported beams (and unidirectional slabs) are based on a simplified method taking into account the mechanical properties of both materials and the elastic behavior of the composite structure. Hypotheses have been made about the load distribution (uniformly distributed live load) and the real behavior of the groove-dowel detail.

The behavior of the groove-dowel detail is based on the push-rod model used in reinforced concrete beams. The shear forces are transmitted from the concrete to the wood

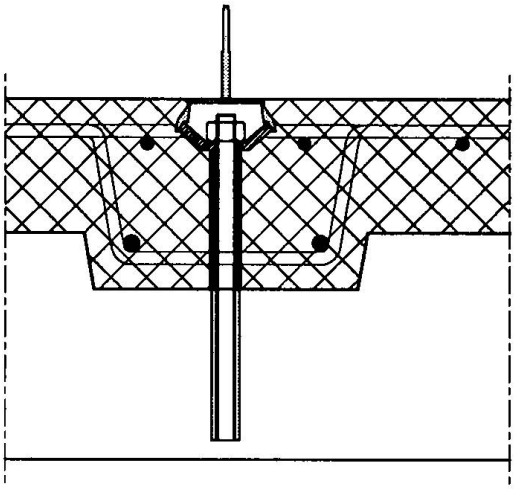

Fig. 5 - Detail: groove and post-tensioned HILTI-dowels

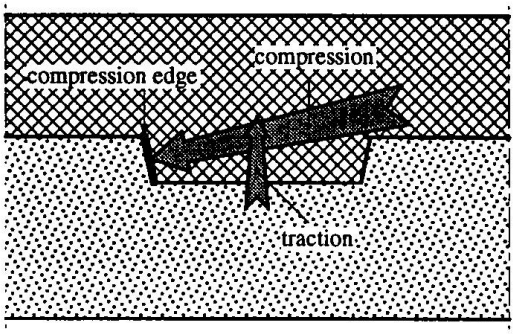

Figure 6 - Forces acting on the wood inside a groove in a timber-concrete composite structure.

by compression on the surface of the grooves. Dowels work in traction to take the vertical part of the inclined compression force on the grooves (figure 6).

Moreover, dowels are post-tensioned after the concrete curing period. The advantage of this post-tensioning is that the gap - caused by the concrete shrinkage - is drastically reduced.

One can introduce some rebars inside the grooves, perpendicularly to the planks direction. This solution will improve the transverse distribution of the load on the slab. Apart from this optional reinforcement, a low diameter reinforcement mesh is advised in concrete to reduce and redistribute curing cracks over the surface of the concrete.

Because of the parallel system created by the nailed planks (see figures 1 and 2), low quality timber can be used with reevaluated properties. As a matter of fact, one single low quality plank has a social behavior once it is connected with other planks and it is no more necessary to design such elements with the quality of the lowest plank. Hence, designing becomes also more efficient and less expensive in materials.

Figure 7 shows the groove and dowel distribution for a simply supported beam. They are concentrated near the supports, under assumption of a distributed load, in order to take internal shear forces with efficiency. Several constructions have already been erected using this new connection detail. Vertical nailed planks are often used for the tension part of the

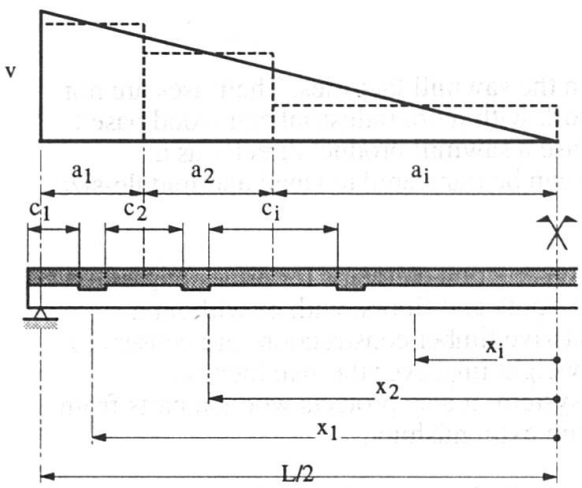

Fig. 7 - Groove positioning according to the shear force diagram.

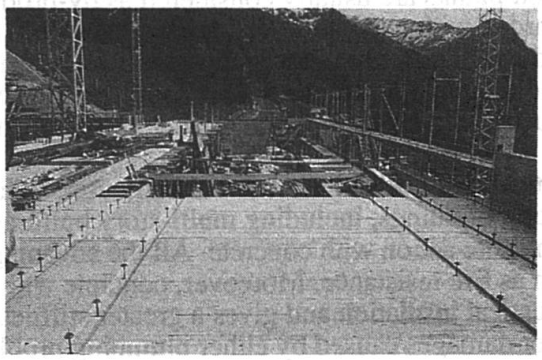

Fig. 8 - Wood elements and dowels for a timber-concrete composite slab: School in Triesenberg (FL).

composite structure in housing (figure 8), but we can also use round posts or glue laminated elements for longer span or higher load solicitations, like for bridges or industrial buildings.

Today's experience shows that this kind of system is still at a developing stage, but it is enough advanced to be applied in different ways. Composite timber-concrete systems show a great flexibility in their application. This technique has both the usual advantage of timber structure and the advantage of concrete structure. Figure 9 shows the behavior of three different floors submitted to the same live load, with regards to the dead load and the acoustical insulation.

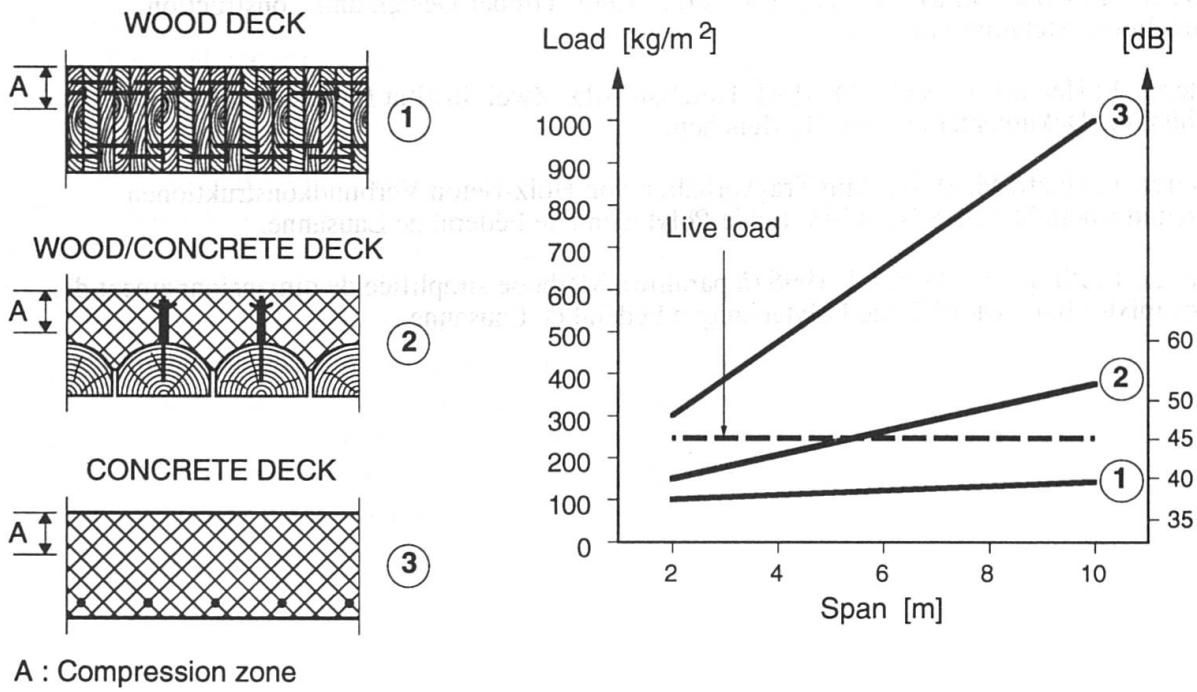

Fig. 9 - Behavior comparison of different floors.

4. Conclusion

Wood planks are usually considered as by-products from the sawmill factories. Their uses are not regarded with interest by engineers who would rather work with more industrialized wood based products. This paper shows an interesting alternative to use a sawmill product directly as a building material. It is worth noticing that this technique can be transfered to small and middle-size industries without too much financial investment.

Vertical nail planks have been already used as massive construction elements for different parts of several buildings, including multi-story buildings; walls, roofs and floors, with or without a composite action with concrete. All the advantages of massive timber constructions are conserved such as fire resistance. Moreover, concrete with its self-weight improves thermal inertia, acoustical insulation and gives a greater stiffness to the system. It also protects wooden parts from water damages caused by either plumbing problems or fire extinguishing.

The timber-concrete composite structure shown in this paper is drastically improving the stiffness of floors and is in accordance with the latest requirements for modern conveniences housing. As proposed in this paper, this system can be used in a broad variety of constructions, including bridges and factory buildings with the same philosophy of using timber materials at its best, with other complementary structural components.

5. References

Hoeft, M. 1994. Zur Berechnung von Verbundträgern mit beliebig gefügtem Querschnitt, Thèse No 1213, Ecole Polytechnique Fédéral de Lausanne.

Götz, K.-H.; Hoor, D.; Möhler, K.; Natterer, J. 1978. Holzbau Atlas, Institut für internationale Architektur-Dokumentation GmbH, München.

Götz, K.-H.; Hoor, D.; Möhler, K.; Natterer, J. 1989. Timber Design and Construction Sourcebook, McGraw-Hill, Inc.

Natterer, J.; Herzog, T.; Volz, M. 1991. Holzbau Atlas Zwei, Institut für internattionale Architektur-Dokumentation GmbH, München.

Natterer, J.; Hoeft, M. 1994. Zum Tragverhalten von Holz-Beton Verbundkonstruktionen Forschungsbericht CERS Nr. 1345, Ecole Polytechnique Fédéral de Lausanne.

Natterer, J.; Pflug, D.; Hamm, J. 1996 (à paraître). Méthode simplifiée de dimensionnement des dalles mixtes bois-béton, Ecole Polytechnique Fédéral de Lausanne.