Zeitschrift: IABSE reports = Rapports AIPC = IVBH Berichte

Band: 76 (1997)

Artikel: Inspection of bridges with orthotropic steel decks with particular attention to fatigue

Autor: Leendertz, J.S. / Weijde, Henk v.d. / Kolstein, Henk

DOI: https://doi.org/10.5169/seals-57460

Nutzungsbedingungen

Die ETH-Bibliothek ist die Anbieterin der digitalisierten Zeitschriften auf E-Periodica. Sie besitzt keine Urheberrechte an den Zeitschriften und ist nicht verantwortlich für deren Inhalte. Die Rechte liegen in der Regel bei den Herausgebern beziehungsweise den externen Rechteinhabern. Das Veröffentlichen von Bildern in Print- und Online-Publikationen sowie auf Social Media-Kanälen oder Webseiten ist nur mit vorheriger Genehmigung der Rechteinhaber erlaubt. Mehr erfahren

Conditions d'utilisation

L'ETH Library est le fournisseur des revues numérisées. Elle ne détient aucun droit d'auteur sur les revues et n'est pas responsable de leur contenu. En règle générale, les droits sont détenus par les éditeurs ou les détenteurs de droits externes. La reproduction d'images dans des publications imprimées ou en ligne ainsi que sur des canaux de médias sociaux ou des sites web n'est autorisée qu'avec l'accord préalable des détenteurs des droits. En savoir plus

Terms of use

The ETH Library is the provider of the digitised journals. It does not own any copyrights to the journals and is not responsible for their content. The rights usually lie with the publishers or the external rights holders. Publishing images in print and online publications, as well as on social media channels or websites, is only permitted with the prior consent of the rights holders. Find out more

Download PDF: 21.11.2025

ETH-Bibliothek Zürich, E-Periodica, https://www.e-periodica.ch

Inspection of Bridges with Orthotropic Steel Decks with Particular Attention to Fatigue

J. S. LEENDERTZ
Senior Design Eng.
Min. of Transport
Zoetermeer, The Netherlands

J.S.Leendertz, born in 1948 works since 1969 in the field of steel structures for bridges and hydraulic steel structures. He is chairman of an internal working group on bridge bearings and expansion joints.

Henk v.d.WEIJDE
Head of Steel Structures
Min. of Transport
Zoetermeer, The Netherlands

Henk van der Weijde, born in 1945, works since 1967 in the field of steel structures for bridges and hydraulic steel structures. Since 1989 he is head of the steel structures department.

Henk KOLSTEIN
Senior Research Engineer
TU-Delft
Delft, The Netherlands

Henk Kolstein, born in 1952 joined Delft University of Technology in 1971. Since 1978 he has been participating in research in the field of bridge loads and fatigue of orthotropic steel bridge decks.

Summary

Structures of orthotropic steel decks, where the deck plate with open or closed stiffeners is supported by and establishes an integrated structure with the deck and crossbeams, show to be susceptible to traffic induced fatigue. This paper shows the behaviour of the stiffener to crossbeam connections in various structures in the Netherlands. The behaviour is related to the essential locations for inspection and several examples of damage in real bridges.

1. Introduction

Most bridges with orthotropic steel bridge decks have been built in the period from 30 to 10 years ago. Several of these structures show fatigue induced cracks in the locations where the stresses are governed by the traffic loads. Although the orthotropic steel decks have become relatively expensive solutions for bridges with shorter spans, they are still used in bridges with longer spans, where the dead weight must be low and for upgrading of existing bridges.

The amount of approximately 300 existing bridges with these structures in the Netherlands, controlled by the Ministry of Transport, causes the need for further investigations in order to obtain a good insight in the behaviour, the fatigue strength and the critical locations of these structures. As the critical locations for fatigue do not always coincide with the critical locations for the ultimate limit state, inspections can be more adequate and limited to specific locations.

This paper will show the common structural bridge types in the Netherlands as well as their behaviour and the way how details are addressed by the traffic loading. Essentially these structures exist all over the world. The damage of several real bridges is shown as an example.

2. Orthotropic steel deck types

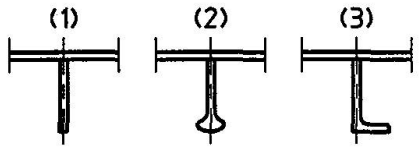

Fig. 1 Open stiffeners

The earlier orthotropic steel decks were stiffened by flats and bulbs (see Fig.1), thus allowing for spans of approximately 2.0m. The connection to the crossbeams have been featured in two ways: 1. fitted between the crossbeams; 2. continuous stiffeners passing through special cut outs eventually with additional cope holes in the crossbeams. The rather small stiffness and strength of these stiffeners caused the need for many crossbeams. A number of these crossbeams, the secondary crossbeams were supported by additional main girders, the secondary main girders. The latter were supported by the primary crossbeams that transmitted the loads to the main girders. The fabrication of these structures with many cut outs and welds was laborious and subsequently expensive. This caused the need to develop structures with less welded connections. Nowadays open stiffeners are mainly used in ferry bridges, where a low torsional stiffness of the deck is required due to the movements of the mooring ships.

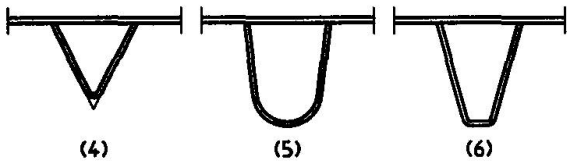

Fig. 2 Closed stiffeners

The introduction of the closed V-shaped, U-shaped and trapezoidal stiffeners as shown in Fig. 2, was a large improvement, which alloyed spans of approximately 4.0m. The secondary crossbeams and main girders were no longer needed. The amount of work involved reduced as well as the costs.

Like the open stiffeners the closed stiffeners could be fitted between or as continuous elements passing through the crossbeams. In this case the cut-out can be of close fit or being featured with an additional oval shaped cope hole or other like the "Haibach" cut out. All details showed to be susceptible to fatigue induced cracks, which resulted in world wide research to the fatigue strength of the details in order to develop data that can be used for the design of new bridges and the repair of existing structures.

Fig. 3 shows a complete overview of all types of closed stiffeners and stiffener to crossbeam connections used in the Netherlands.

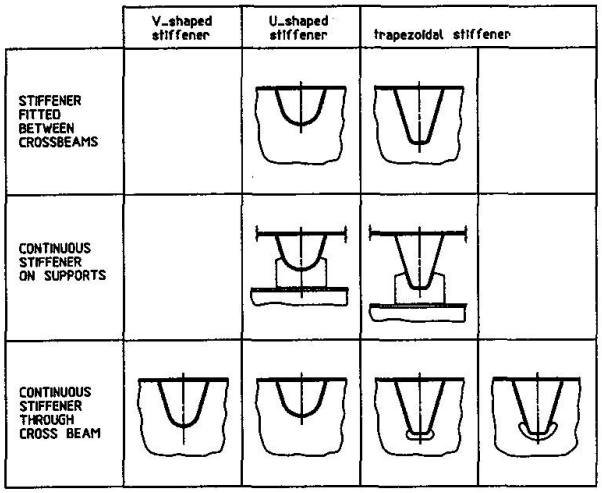

Fig. 3 Types of trough to crossbeam connection

3. Structural Bridge Types

3.1 General

In the orthotropic steel deck structures the deck plate acts together with the longitudinal stiffener. This system transmits the loads to the crossbeams. The latter transmit the loads to the main load carrying system, which can be constructed as plate girders or a box girder. The main load carrying system may be integrated in one of higher rank, such as an arch, a cable stayed structure or a suspension structure.

3.2 Structural systems

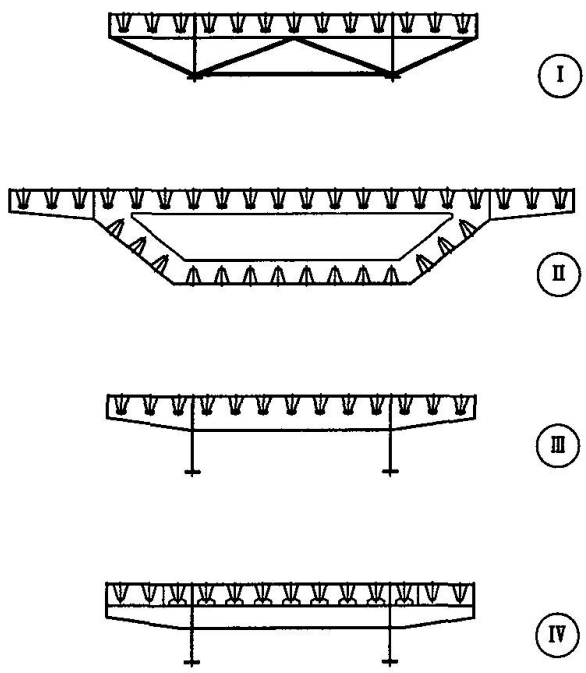

Fig. 4 Structural types of bridges

Fig.4 shows four load carrying systems. For simplicity only systems with continuous closed stiffeners are shown. Type I is a plate girder bridge with crossbeams that consists of a truss and a top cord acting as a continuous beam with short spans. The continuous beam transfers the loads by bending and shear to the truss nodes. The truss is supported by the main girders. Type II is a box girder bridge. The diaphragm of the box acts as a deep crossbeam that transfers the loads to the inclined and vertical webs of the box girder. Type III is a conventional crossbeam with cantilevers that are supported by the main girders. Type IV is an I-shaped crossbeam that receives the loads from the supports of the closed stiffeners. The shear connections in the cantilever sections cause a rotational spring using the axial stiffnesses of the deck plate and the I-beam and a lever arm. This is called the "Floating Deck Structure" and is used in a few bridges in the Netherlands [1]. It has been developed for its easy of assembly.

3.3 Structural behaviour

In addition to the in plane shear and bending that is generated by the loading of the crossbeams, all structures are subjected to out of plane rotations, caused by the deflection of the stiffeners. In the combination effect the contribution from "in plane" and "out of plane" behaviour differs from type to type and depends strongly on the structural features.

4. Stiffener to crossbeam connections

4.1 Open stiffeners

Open stiffeners are fitted between the crossbeams or are continuous. The first type is sensitive for eccentricities related to the continuous stiffener and the welded connection to the crossbeam.

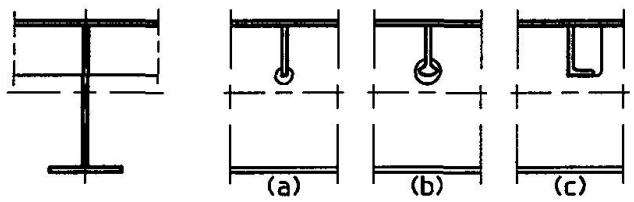

Fig. 5 Crossbeam connections with continuous open stiffeners

Because the influence lines show short distances between the zero-crossings a rather unfavourable connection is submitted to many cycles caused by the wheel loads. Fig.5 shows the connections of continuous open stiffeners to the crossbeams. In the connections shown, cope holes have been used for fitting purposes. The cope hole causes a discontinuity in the crossbeam. In Fig.5 type (a) and (b) it causes a local stress concentration, but in Fig.5 type (c) a "Vierendeel" effect with additional bending is to be expected. This effect will be explained later in conjunction with the closed stiffener connections.

4.2 Closed stiffeners

Closed stiffeners are sometimes fitted between the crossbeams, but more often they are continuous. In the latter case they may be welded all around, or passing through cut outs, eventually with additional cope holes for fitting purposes. In the past the connections with cope holes have been investigated extensively in order to analyse the fatigue strength and to optimise the shape. [2,3]

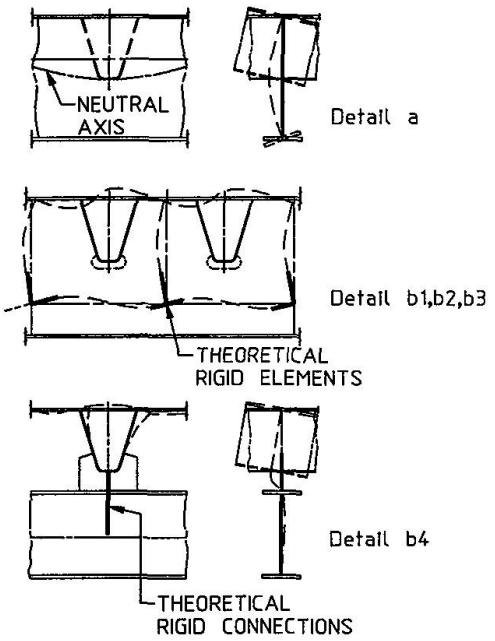

Fig. 6 Closed stiffener connections and structural behaviour

Fig.6 shows both the connections and their structural behaviour. Two groups are distinguished:

a. Troughs fitted between the crossbeams

b. Continuous troughs passing through cut outs with cope holes

Usually Group "a" connections are applied in structures with shallow crossbeams, where cut outs cause a too low shear capacity of the crossbeam. In the past, the detail with fillet welds showed many fatigue cracks. The details with full penetration welds show a much better fatigue performance.

The Group "b" connections are applied in structures with deeper crossbeams, diaphragms of Box Girder Bridges, "Floating Deck" structures. The following subdivision can be made:

"b1": Continuous troughs passing through a cut out with close fit and welded around with fillet welds;
"b2": Continuous trough passing through a cut out with an oval shape or similar;
"b3": Continuous trough passing through a cut out with additional cope holes with varying radius, the so-called "Haibach cut out" [4] or a similar shape;
"b4": Continuous trough supported by a counter-fitted support plate, welded around the bottom of the trough. Further the support is welded to an I-beam.

4.3 Mechanical behaviour of the connections

In the application of the detail "a", a discontinuity in the stiffener exists with the possibility of eccentricities. The crossbeam section remains practically unchanged. The stiffener rotations cause "out of plane" rotations in the web of the crossbeam.

The structural behaviour of the details "b1", "b2" and "b3" is the same, with minor differences.

In plane, the cut out causes a "Vierendeel Effect" if the depth of the cut out is substantially, compared to the depth of the crossbeam or diaphragm [5,6,7]. This is likely to occur if the detail is applied in Crossbeams Type I and III bridge structures (see Fig.6). Further all details are subjected to locally applied forces and a contraction effect of the bottom of the stiffener caused by bending moments at the stiffener supports [8].

Out of plane rotations are transmitted to the web of the crossbeam or diaphragm. The detail "b1" acts more rigid than the details "b2 and b3".

The detail "b4" does not participate substantially in the in plane load carrying behaviour of the crossbeam, as the shear connection between deck and I-beam caused by the trough is flexible. The out of plane rotations of the stiffeners are transmitted by bending in the support plate to the I-beam which will rotate and translate out of plane in line with the horizontal and torsional stiffness of the I-beam.

5. Crossbeam in-plane behaviour

In crossbeams with connections "b2" a significant part of the web has been removed. Consequently an "in plane" Vierendeel behaviour is generated (see Fig.7). The part between the troughs, often called the "tooth" acts as a post clamped in a continuous T-beam upside down. Below the cut outs the T-beam remains as the bottom cord. Between the cut outs the web is fully intact. Features like the presence or absence of different shaped cope holes do not change the behaviour significantly [7].

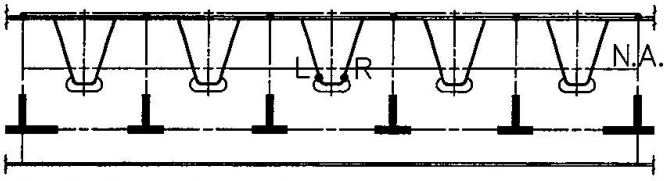

Fig. 7 Vierendeel system

Due to crossbeam bending the locations "L" and "R" translate in horizontal direction. Depending on the neutral axis of the system an elongation or compression of the distance between them, is generated. Shear forces cause relative vertical displacements and rotations in the locations "L" and "R". In [4] these phenomena have been reported for detail "b2". Further, nominal stresses for a set of beams have been calculated. These results have been combined for the locations in the beam where the interaction between shear and bending effects reaches a maximum. For easy comparison the external load introduction is ignored in these results.

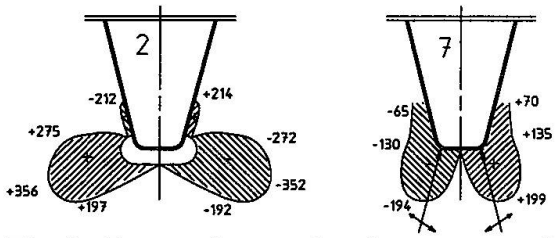

Fig. 8 Principal stress distributions around cut out and continuous weld (N/mm²)

Fig.8 shows the results of FE-analyses with for a test specimen [3,7,9] the principal stresses around the cut out for crossbeam to trough nr. 2 (detail "b2") connection and a fully welded around crossbeam to trough nr. 7 (detail "b1") connection under the same but symmetrical bending and shear loads. The model consists of shell elements, which ignores the effect of the plate and weld dimensions in the neighbourhood of the welds. The arrows show the direction of the principal stresses at a specific location. Near to the welds the stress levels reach approximately the same level, but the direction with respect to the weld is completely different. Fatigue tests on a true scale specimen [3] showed a better performance for the connection of trough nr.7.

In the "Floating Deck" structure as shown in Fig.9 [1,10], the end of the I-beam is restrained by the lever system, which generates a compression in the deck and a tension in the I-beam. The horizontal compression and tension forces at a distance a_l are balancing the bending moment M_S at the support. The normal forces in the deck and the I-beam, the rotations in the I-beam and the shear deformation in the I-beam cause the deck shifting over a distance S_h with respect to the I-beam as shown in Fig.10. Asymmetrical loads cause in some locations larger shifts S_h [10].

The shift S_h generates normal forces and bending moments in the trough web. Fig.11 shows the nominal stresses in the trough web and the deckplate caused by the shift S_h of 1mm. The shifts S_h for a set of beams of with depths are shown in [10]. Realistic values of S_h under maximum crossbeam loading vary from 0.1 - 3.3 mm. In real structures these stresses must be multiplied with a stress concentration factor in order to find the Hot Spot Stresses which are relevant for fatigue.

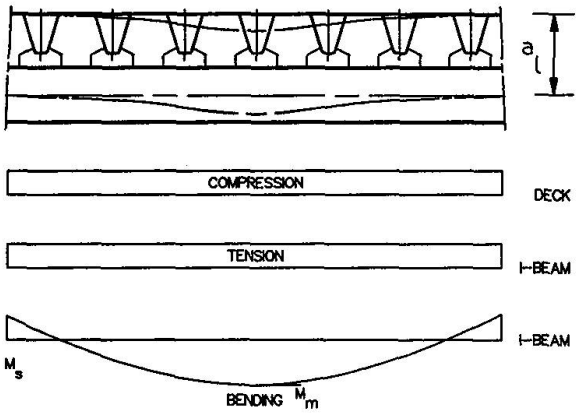

Fig. 9 Model of floating deck crossbeam

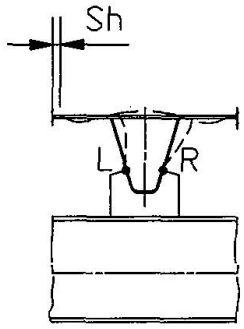

Fig. 10 Horizontal shift S_h

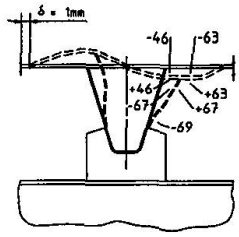

Fig.11 Stresses at a shift S_h of 1 mm (N/mm^2)

It is obvious that these stresses which mainly are governed by bending effects in the deck plate and trough web, can not be neglected. The stress concentration factors related to the bottom connection are assumed to be higher than the stress concentration factors related to the trough to deck connection. If however the stresses due to the wheel loading on the deck are added, high stress amplitudes may occur due to the combination of both effects.

6. Crossbeam out-of-plane behaviour

Passing vehicles generate bending and shear in the stiffeners, which deflect subsequently and makes the supports of the stiffeners rotate (see Fig.6). The rotation of this connection causes an out of plane movement of the crossbeam web. This phenomenon takes place in all types of stiffeners. The connection "b2" has been investigated in ECSC research Phase 3 and 4. In [2,3] the fatigue behaviour has been reported for various types of stiffeners and cut outs. The fatigue strength of details "b2" has been investigated under simultaneous vertical forces with out of plane bending in the web plate. Fig.12 shows for three test specimens the stress results of FE analyses under equal vertical load and out of plane rotation.

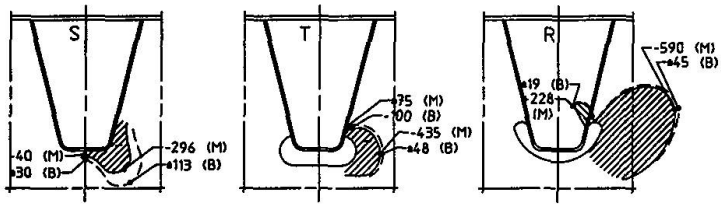

Fig. 12 Stress distributions under vertical load in combination with out of plane bending (N/mm^2)

The stresses shown are the membrane stresses (M) and the out of plane bending stresses (B) for test specimens at the Stevin Laboratory (NL) as reported in [2]. The models consisted of shell elements, which means that the stresses in the neighbourhood of the trough to crossbeam connection do not include the weld and plate dimension effects [9]. Nevertheless it is obvious that in this case, the rigid support not far below the trough to crossbeam web connection causes in the detail "b1" (S) much higher bending stresses than in the details "b2" (T) and "b3" (R). The types "b1";"b2" and "b3" refer to the detail categories of Section 4.2. The tests in the Stevin laboratory showed a better fatigue strength for the type "S", if compared to the types "T" and "R". The V-shaped stiffener connection tested at TRL (UK) however showed a lower fatigue strength. The results have been reported in [2].

7. Welded details

As a simplification, most of the details used in real structures can be reduced to 2 types of welded details , those with and without cope holes, see Groups "a" and "b" in Section 4.2. The combination of relevant degrees of freedom and the critical locations can be derived from the mechanical behaviour. Fig.13 and Fig.14 show the relevant degrees of freedom and critical fatigue locations for details without and with cope holes, Groups "a" and "b", respectively. Particular attention must be paid to the relevant influence lines and the stress concentration factors related to a degree of freedom and stresses in a specific location.

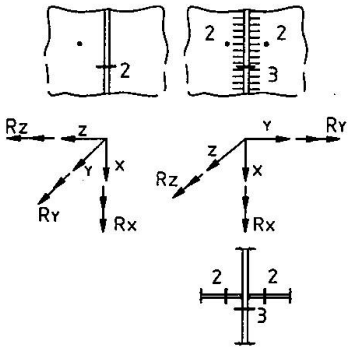

Fig. 13 Fatigue locations and degrees of freedom detail "a"

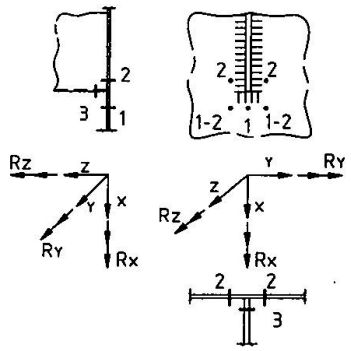

Fig. 14 Fatigue locations and degrees of freedom detail "b"

8. Combination of Effects in Critical Locations

8.1 Influence lines and transfer functions

Once the structural behaviour of the bridge structure is known, it is possible to derive the transfer functions for crossbeam loading and out of plane rotations. The transfer functions that govern the stresses in the above mentioned locations depend on the in plane stiffness (shear and bending) of the crossbeam vs. the bending stiffness of the deck structure.

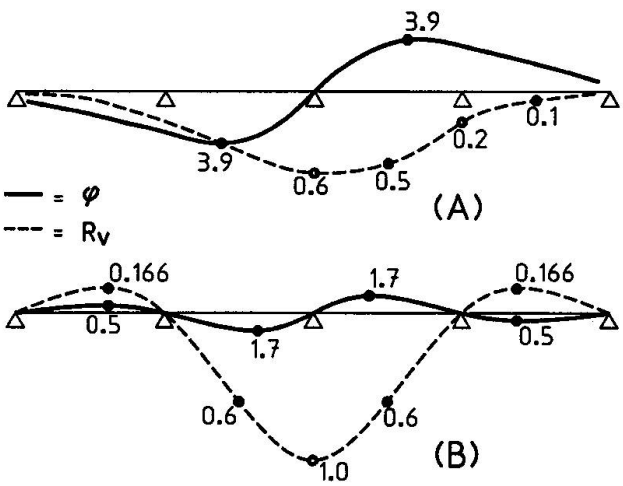

Fig. 15 Influence lines for stiffener support rotations (f) and reactions (R_v)

Fig.15 shows the influence lines for rotations (ϕ) and crossbeam loading (R_v) of the middle trough stiffener support due to wheel loads. Lines (A) show the results for more flexible crossbeams and a (B) for more rigid crossbeams. Rigid crossbeams show higher loading than flexible crossbeams, but the amount of cycles under unit loads is higher. This effect applies as well for vehicle loads.

Flexible crossbeams show larger rotations, but a smaller amount of cycles than rigid crossbeams. It may be expected that in many cases open stiffeners will tend to have an influence line of type (B) which applies for closed stiffeners in box girder bridges too.

Closed stiffeners near crossbeam mid-span in plate girder bridges will act according a line between (A) and (B), depending on the vertical stiffness of the crossbeam. Near the supports they will tend to behave like (B).

8.2 Evaluation

Combining the knowledge of the structural bridge type behaviour, the susceptible details can be classified as shown in Table 1. (details type "a", not considered). The damage in real bridges can be compared to the detail classification.

SUSCEPTIBLE LOCATIONS				
Stiffener Type	Structural Bridge Type	Mechanism	"b"	'3'
1. Open	I. Plate Girder Crossbeam Truss	Out of Plane dominant	"b"	'3'
2. Closed	II. Box Girder	Out of Plane with In Plane Support	"b"	'1-2','3'
	III. Plate Girder Crossbeam with Cut Outs	a. Crossbeam Midspan Out of Plane with In Plane Support	"b"	'1-2','3'
		b. Crossbeam Support Out of Plane with In Plane Support and Vierendeel Effects	"b"	'1','1-2','3' particularly under wheel tracks
	IV. Plate Girder Floating Deck	a. Crossbeam Midspan Out of Plane with Support and Shift Effects	"b"	'1','3' particularly under wheel tracks
		b. Deck Combination of Shift Effect and External Loads	not classified	Longitudinal deck to stiffener weld under wheel tracks

Table 1

9. Damage examples

9.1. Open stiffeners

In two plate girder bridges with open stiffeners and truss diaphragms cracks have been found in the stiffener to crossbeam connections [11]. Here the bulb stiffeners pass through circular cut outs as shown in Fig.5(b).

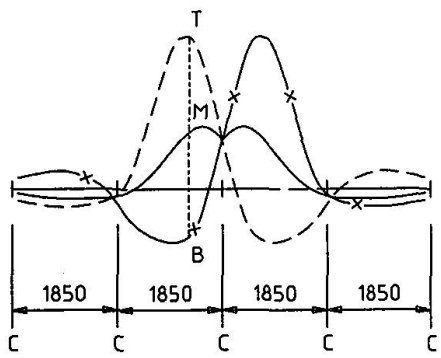

Fig. 16 Influence line stresses outer side web plate location "P"

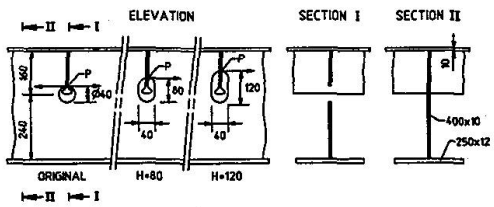

Fig. 17 Original detail and investigated cope holes and stresses for location "P"

Fig.16 shows for a 1kN wheel load the influence lines for the stresses in location "P".

Fig.17 shows the investigated details and stress locations. The out of plane bending of the crossbeam web showed to be of large importance. Two alternative cut outs with a larger depth have been investigated. The H=80 cut out has been selected as solution for the repair, because it showed a reduction of the stress amplitudes to 78% and proved to have the required shear capacity.

9.2 Closed stiffeners in structural bridge type II

In one box girder bridge cracks in the corrosion protection have been found in location '1-2' [11]. This may indicate that future cracks will occur in the steel structure.
If so the damages can be related to test series ECCS Phase 3 [2], small test specimens.

9.3 Closed stiffeners in structural bridge type III

In two plate girder bridges a number cracks have been found in location '3' [11]. The amount of defects was in line with the increasing shear force along the crossbeam towards the main girder. The damages can be related to the test series ECCS Phase 3 [2], small test specimens and Phase 4, large test specimens [3] and the analyses of the structural mechanisms as described in Heron 3 1995 [7].

The welds have been replaced without a modification of the detail. Special attention has been paid to the execution aspects.

9.4 Closed stiffeners in structural bridge type IV

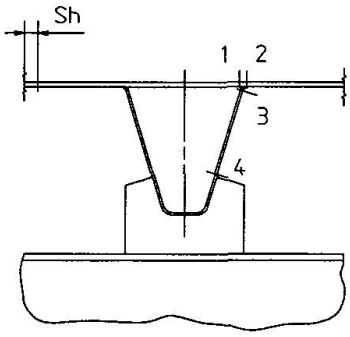

Fig. 18 Relevant locations for fatigue

In two bridges with the "Floating Deck" structure [1,9] some cracks were found in the longitudinal trough to deck weld (location 3) in the crossbeam neighbourhood of the crossbeam during a resurfacing operation [11]. Fig. 18 shows the relevant locations for fatigue which relate to the stresses in Fig 11. In the inspected bridges the deck plate had a thickness of 10 mm. No other cracks were found. The lack of time and the obtained insight in the mechanism led to the decision that the crack and the original weld were ground and replaced by a weld of 80% penetration, which had to be made in an overhead position. During repair the bridge was closed for all traffic.

10. Concluding remarks

- In general, the cracks found during inspections are in line with the described susceptible locations.
- The structural behaviour of the crossbeams and deck has been investigated in analytical methods and by Finite Element Models with shell elements. More specific analyses including the weld geometry and plate thickness will be needed.
- The fatigue strength of the various details has been investigated but not yet for all possible loading combinations related to the degrees of freedom.
- The stress concentration factors and their influence have not yet been fully investigated.
- The appropriate influence lines for crossbeam loading and rotations including the crossbeam flexibility must be linked to the vehicle spectrum.

Acknowledgement

The authors wish to thank their colleagues of the Ministry of Transport, Public Works and Water Management for their fruitful co-operation.

References

1. YPEY E. New Developments in Dutch Steel Bridge Building. IABSE Congress, Amsterdam 1972.

2. BRULS; BEALES; BIGNONNET; CARAMELLI; CROCE; FROLI; JACOB; KOLSTEIN; LEHRKE; POLEUR; SANPAOLESI Measurements and Interpretation of Dynamic Loads on Bridges (3). Commission of the European Communities. Report, Brussels 1991.

3. BRULS; CARAMELLI; CUNNINGHAME; JACOB; KOLSTEIN; LEHRKE; LE PAUTREMAT Measurements and Interpretation of Dynamic Loads on Bridges (4), Commission of the European Communities. Report, Brussels 1995.

4. HAIBACH E., PLASIL I. Untersuchungen zur Betriebsfestigkeit von Stahlleichtfahrbahnen mit Trapezhohlsteifen im Eisenbahnbrückenbau. Der Stahlbau 9, 1983.

5. FALKE J. Zum Tragverhalten und zur Berechnung von Querträgern orthotroper Platten. Diss. Technische Universität Braunschweig, 1983.

6. LEENDERTZ J.S.; KOLSTEIN M.H. Numerical Analyses of the Trough to Crossbeam Connections in Orthotropic Steel Bridge Decks. Proceedings Nordic Steel Conference, Malmö 1995.

7. LEENDERTZ J.S.; KOLSTEIN M.H. The Behaviour of Trough Stiffener to Crossbeam Connections in Orthotropic Steel Bridge Decks. Heron Volume 40, Delft 1995.

8. WOLCHUK R.; OSTAPENKO A. Secondary Stresses in Closed Orthotropic Deck Ribs at Floor Beams. ASCE Journal of Structural Engineering, Volume 118, No.2, 1992.

9. KOLSTEIN M.H.; WARDENIER J.; LEENDERTZ J.S. Fatigue Performance of the Trough to Crossbeam Connections in Orthotropic Steel Bridge Decks. Nordic Steel Conference Malmö 1995

10. LEENDERTZ J.S.; KOLSTEIN M.H. Structural Types and Endurance Aspects of Crossbeams in Steel Orthotropic Plate Girder Bridges. ICASS Proceedings, Hong Kong 1996.

11. MIN. OF TRANSPORT, PUBLIC WORKS and WATERMANAGEMENT Various Inspection Reports. Not published