Zeitschrift: IABSE reports = Rapports AIPC = IVBH Berichte

Band: 75 (1996)

Artikel: Prediction of the flexural resistance of bolted connections with angles

Autor: Faella, C. / Piluso, V. / Rizzano, G.

DOI: https://doi.org/10.5169/seals-56921

Nutzungsbedingungen

Die ETH-Bibliothek ist die Anbieterin der digitalisierten Zeitschriften auf E-Periodica. Sie besitzt keine Urheberrechte an den Zeitschriften und ist nicht verantwortlich für deren Inhalte. Die Rechte liegen in der Regel bei den Herausgebern beziehungsweise den externen Rechteinhabern. Das Veröffentlichen von Bildern in Print- und Online-Publikationen sowie auf Social Media-Kanälen oder Webseiten ist nur mit vorheriger Genehmigung der Rechteinhaber erlaubt. Mehr erfahren

Conditions d'utilisation

L'ETH Library est le fournisseur des revues numérisées. Elle ne détient aucun droit d'auteur sur les revues et n'est pas responsable de leur contenu. En règle générale, les droits sont détenus par les éditeurs ou les détenteurs de droits externes. La reproduction d'images dans des publications imprimées ou en ligne ainsi que sur des canaux de médias sociaux ou des sites web n'est autorisée qu'avec l'accord préalable des détenteurs des droits. En savoir plus

Terms of use

The ETH Library is the provider of the digitised journals. It does not own any copyrights to the journals and is not responsible for their content. The rights usually lie with the publishers or the external rights holders. Publishing images in print and online publications, as well as on social media channels or websites, is only permitted with the prior consent of the rights holders. Find out more

Download PDF: 10.01.2026

ETH-Bibliothek Zürich, E-Periodica, https://www.e-periodica.ch

PREDICTION OF THE FLEXURAL RESISTANCE OF BOLTED CONNECTIONS WITH ANGLES

C. Faella, V. Piluso, G. Rizzano
Department of Civil Engineering, University of Salerno, Italy

Summary

A new procedure for evaluating the flexural resistance of top and seat angle connections including web angles is presented in this paper. The main feature of the proposed procedure is its ability to account for all joint components, without any preliminary assumption concerning the failure mode. Therefore, it can be well inserted within the framework of Annex J of Eurocode 3 which, up-to-now, do not include this very common beam-to-column joint typology. The reliability of the proposed procedure is confirmed by a wide comparison with available experimental data.

1. Introduction

The procedures for evaluating the rotational behaviour of beam-to-column joints have been recently codified in Eurocode 3 with its Annex J [1], where the component method is developed with reference to the most common joint typologies: welded connections, bolted end plate connections and top and seat angle connections. The case of connections including web angles is, up-to-now, not included in Annex J, perhaps due to the additional difficulties arising with this connection typology as soon as all joint components are accounted for. In fact, even though simplified methods have been already developed for evaluating the rotational behaviour of connections with angles [2,3,4], these models refer to the behaviour of the connection only rather than to the joint as a whole, including the significant influence of the column components. In addition, the influence of some connection components is neglected. The case of bolted connections with angles becomes even more complex than the case of bolted end plate connections as soon as the interaction with the column components is accounted for.

The aim of this paper is to propose a comprehensive procedure to evaluate the flexural resistance of bolted connections with angles. The innovative feature of the proposed procedure is its ability to include all joint components without any preliminary assumption regarding the failure mode. In addition, it can be well inserted within the framework of Annex J covering the corresponding gap in modern European code. Studies to extend the procedure to the prediction of the joint rotational stiffness are currently in progress aiming at the complete development of the component approach also for this very common joint typology.

2. Prediction of the flexural resistance of connections with angles

The Annnex J methodology for evaluating the joint flexural resistance can be extended to the case of connections with top and seat angles including also web angles considering that the contribution of web angles to the overall joint resistance can be determined through a procedure similar to that adopted, within the codified approach, for evaluating the flexural resistance of extended end plate connections.

The bolt rows in tension are defined as those connecting the top and web angles to the column flange. The first bolt row is the one connecting the leg of the top angle adjacent to the column flange. The second bolt row and subsequent ones are those connecting the web angles to the column flange, starting from the upper bolt row.

For each bolt row the effective design resistance has to be computed as the smallest design resistance of the basic components. The basic components involved in the evaluation of the joint flexural resistance, according to Annex J provisions, are: column web panel in shear, column web in compression, beam flange and web in compression, column flange in bending, column web in tension, beam web in tension, flange cleat in bending, bolts in tension, bolts in shear, bolts in bearing, plate in tension (top angle), plate in compression (seat angle).

The resistance of some of these components is independent of the bolt rows connected to the column flange and, therefore, they represent only a limitation to the overall design resi-

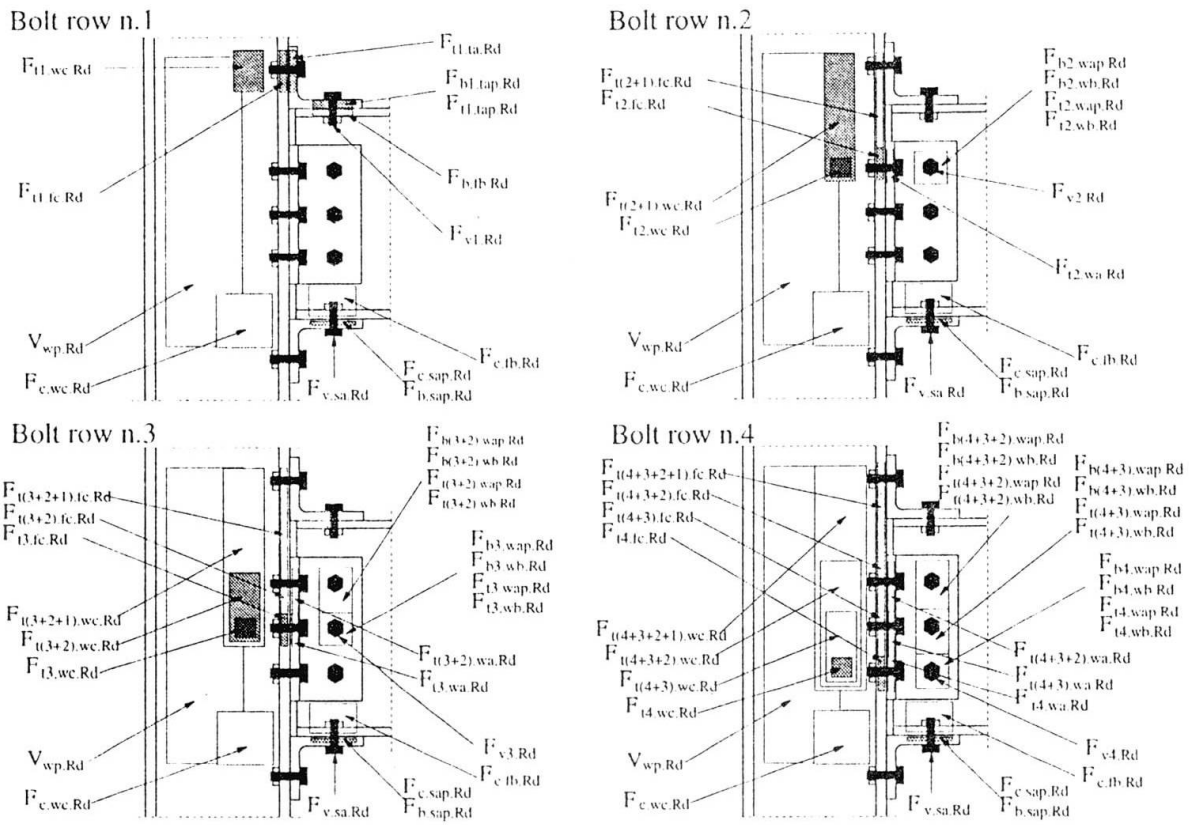

Fig. 1 - Proposed procedure for evaluating the joint flexural resistance

stance of bolt rows in tension. This is the case of the column web panel in shear $V_{wp,Rd}$, the column web in compression $F_{c,wc,Rd}$, the beam flange and web in compression $F_{c,fb,Rd}$, the bolts in shear connecting the seat angle to the beam flange $F_{v,sa,Rd}$, the bolts in bearing both with reference to the compressed beam flange $F_{b,fb,Rd}$ and to the seat angle $F_{b,sap,Rd}$, and finally the plate in compression (seat angle) $F_{c,sap,Rd}$.

On the contrary, the resistance of the remaining components is involved in the evaluation of the design tension resistance of the individual bolt rows considered both as a single bolt row and as belonging to a bolt group. This is the case of the column flange in bending (including bolts in tension) $F_{ti,fc,Rd}$ (being i the bolt row index), the column web in tension $F_{ti,wc,Rd}$, the beam web in tension $F_{ti,wb,Rd}$, the top angle in bending (including bolts in tension) $F_{t1,ta,Rd}$, the web angle in bending (including bolts in tension) $F_{ti,wa,Rd}$, the bolts in shear connecting the top angle $F_{v1,Rd}$ and the web angle $F_{vi,Rd}$ with the column flange, the bolts in bearing (with reference to the beam tension flange $F_{b,fb,Rd}$, to the top angle plate $F_{b,tap,Rd}$ and to the web angle plate $F_{bi,wap,Rd}$) and, finally, the plate in tension (top angle) $F_{t,tap,Rd}$.

Starting from the first bolt row, the proposed procedure evaluates the design tension resistance $F_{ti,Rd}$ of each bolt row as the minimum values of the resistance of its basic component (Fig.1) considering also the limitations, due to the components independent of the bolt rows, to the resistance of any bolt group constituted by the i-th bolt row and one or more bolt rows. The contribution of each bolt row to the design moment resistance of the joint is obtained multipling $F_{ti,Rd}$ with the distance h_i between the i-th bolt row and the centre of compression which is located at mid-thickness of the seat angle adjacent to the beam flange.

The numerical procedure for evaluating the joint resistance is described, step by step, in the Appendix given at the end of this paper.

The strength of the joint components, excluding the resistance of the web angles in bending ($F_{ti,wa,Rd}$ which is analysed in the next section) and the top angle in bending ($F_{t1,ta,Rd}$ which is discussed in the section 4) are determined according the Annex J. In addition, exception is made with reference to the column web panel in shear and column web in compression whose design resistance is evaluated according to the suggestions given by the authors in previous works [5,6].

3. Design resistance of web angle in bending

The contribution of the web angles can be computed according to the model developed by Chen et al.[2,3,4]. This model is based on the following assumptions: a) the collapse mechanism of the web angle involves all its height; b) the Tresca's yield criterion combined with the Drucker shear-moment interaction is considered.

Therefore, the plastic shear force distribution V_{py} along the height of the web angle L_{wa} can be obtained by solving the following fourth-order equation:

$$\left(\frac{V_{py}}{V_{pa}}\right)^4 + \frac{g_y}{t_{wa}}\frac{V_{py}}{V_{pa}} = 1 \tag{1}$$

where g_y represents the distance between the two plastic hinges, developed in the web angle leg attached to the column flange, measured at the distance y from the lower edge of the web angle and t_{wa} is the web angle tickness (Fig.2).

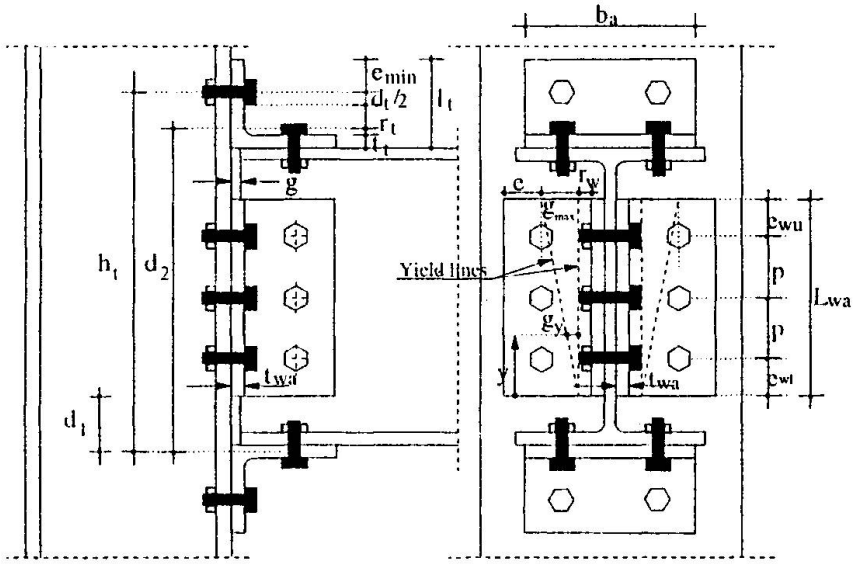

Fig. 2 - Joint geometrical parameters

The solution of eq.(1) can be obtained through a numerical procedure. Therefore, in order to simplify the procedure, Chen et al. propose to assume a linear distribution of the plastic shear, as shown in Fig.3, and to locate the overall plastic shear V_{pa} of the web angle in the corresponding barycentre. Therefore, the contribution to the flexural resistance due to double web angles is given by:

$$M_{j,Rd}^{(dwa)} = 2\, V_{pa}\, d_4 \tag{2}$$

where d_4 is the distance between the point of application of V_{pa} and the centre of compression.

An alternative method, which leads to a closed form solution, can be proposed starting from an approximate moment-shear interaction based on the assumption that the external fibres withstand the bending moment, while the internal ones are subjected to shear stress only. In this case, the application of the Hencky's yield criterion leads to the following relationship:

$$\left(\frac{V_{py}}{V_{pa}}\right)^2 + \frac{2}{\sqrt{3}}\frac{g_y}{t_{wa}}\left(\frac{V_{py}}{V_{pa}}\right) = 1 \tag{3}$$

which has the positive solution:

$$\frac{V_{py}}{V_{pa}} = \frac{1}{\sqrt{3}}\left\{\left[\left(\alpha\frac{y}{L_{wa}}\right)^2 + 3\right]^{1/2} - \alpha\frac{y}{L_{wa}}\right\} \tag{4}$$

where $\alpha = g_{max}/t_{wa}$ (Fig.2).

In this case, the overall plastic shear force due to the web angle V_{pa} can be obtained by integrating V_{py} over the entire height L_{wa} of the web angle:

$$V_{pa} = \left[-\frac{\sqrt{3}\ln 3}{4\alpha} + \frac{\sqrt{3}\ln[\sqrt{\alpha^2+3}+\alpha]}{2\alpha} + \frac{\sqrt{3}\sqrt{\alpha^2+3}}{6} - \frac{\sqrt{3}\alpha}{6} \right] L_{wa} V_{po} \tag{5}$$

In addition the distance between the overall plastic shear force, due to the web angle, and its lower edge is given by:

$$d_p = \frac{\int_0^{L_{wa}} V_{py}\, y\, dy}{\int_0^{L_{wa}} V_{py}\, dy} = \frac{4 L_{wa} [(\alpha^2+3)^{1.5} - \alpha^3 - 3\sqrt{3}]}{3\alpha \{ 2[3\ln(\sqrt{\alpha^2+3}+\alpha) + \alpha(\sqrt{\alpha^2+3}-\alpha)] - \ln 27 \}} \tag{6}$$

In order to predict the web angle design resistance through a procedure based on the T-stub model adopted by Annex J, an approximate distribution of the plastic shear forces (Fig.3) can be considered. To this scope, the effective length l_{eff} of each bolt row can be defined as suggested in Table 1. According to the above distribution, the contribution of each bolt row is computed as $l_{eff} V_{py,i}$ (where $V_{py,i}$ is given by equation (4) considering the location y_i of the i-th bolt row). Furthermore, with reference to an equivalent T-stub failing according to the flange complete yielding mode [1], the above resistance of the single bolt row corresponds to assume that the resistance of a couple of web angles ($2 V_{py,i} l_{eff}$) is equivalent, for each bolt row, to that of a T-stub $4 M_{pl,Rd}/m_i'$ with the parameter m_i' given by:

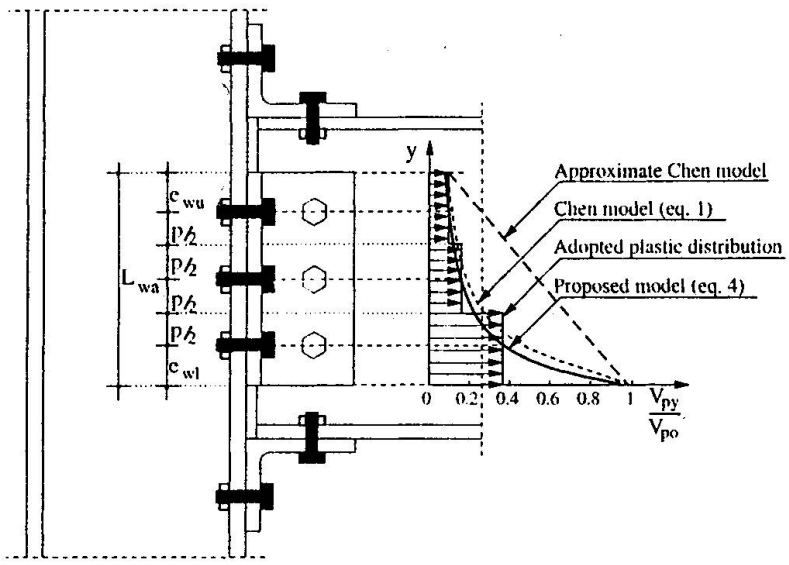

Fig. 3 - Plastic shear of the web angle

$$m_i' = \frac{3}{2} \frac{t_{wa}}{\left[\left(\alpha \frac{y_i}{L_{wa}}\right)^2 + 3\right]^{1/2} - \alpha \frac{y_i}{L_{wa}}} \tag{7}$$

Therefore, within the framework of Annex J approach, the design resistance of the single bolt row of double web angles $F_{t,wa,Rd}$ can be computed as the smallest value among three possible failure modes:

Mode 1: complete yielding of angle legs

$$F_{t1,wa,Rd} = \frac{4 M_{pl,Rd}}{m_i'} \tag{8}$$

where $M_{pl,Rd}$ is the plastic moment of the web angle plate with the effective length given in Table 1 and m' defined according to equation (7).

Mode 2: bolt failure with angle leg yielding

Tab. 1 - Effective length for web angles

	Bolt row considered individually		Bolt row considered as part of a bolt-group
	circular pattern $l_{eff,cp}$	other patterns $l_{eff,np}$	
Bolt row adjacent to the upper edge of the web angle	$2\pi m$	$4m + 1.25e$	$0.5p + e_{wu}$
Inner bolt row	$2\pi m$	$4m + 1.25e$	p
Bolt row adjacent to the lower edge of the web angle	$2\pi m$	$4m + 1.25e$	$0.5p + e_{wl}$

$$F_{t2,wa,Rd} = \frac{M_{pl,Rd} + n\sum B_{t,Rd}}{m + n} \tag{9}$$

where $B_{t,Rd}$ is the design tension resistance of a bolt-plate assembly, m is the distance between the bolt axis and the plastic hinge, n is the distance between the bolt axis and the prying force. Both m and n are defined according to Annex J [1]. .

Mode 3: bolt failure

$$F_{t3,wa,Rd} = \sum B_{t,Rd} \tag{10}$$

Obviously, in the case of single web angle connections the above contributions have to be halved.

4. Contribution of the top angle in bending to the overall joint resistance

According to Annex J, the top angle can be modelled as an equivalent T-stub characterized by $l_{eff} = 0.5b_a$, where b_a is the length of the cleat, and m is the following geometrical parameter:

$$m = l_t - e_{min} - t_t - 0.8\, r_t \quad \text{for} \quad g \le t_t \quad \text{and} \quad m = l_t - e_{min} - t_t/2 \quad \text{for} \quad g > t_t \tag{11}$$

where g, l_t, e_{min}, t_t, r_t are given in Fig.2.

Therefore, the contribution of the top angle to the joint flexural resistance can be obtained as:

$$M_{j,Rd}^{(ta)} = F_{t,ta,Rd}\, h_t \tag{12}$$

provided that the weakest component for the first bolt row is represented by the top angle in bending. $F_{t,ta,Rd}$ is the design resistance of the top angle computed through equations (8-10) with the m parameter given by equation (11), assuming in this case $m_i' = m$, and h_t is the distance between the bolt row axis of the top angle leg attached to the column flange and the centre of compression.

A different model for evaluating the flexural resistance of top and seat angle connections has been proposed by Chen et al. [2,3,4]. This model is based on the complete yielding of the cleat. The contribution of the top and seat angles to the connection flexural resistance is given by:

$$M_{j,Rd}^{(ta)} = M_{os} + M_{pt} + V_{pt}\, d_2 \tag{13}$$

where M_{os} is the plastic moment of the seat angle leg adjacent to the beam flange, M_{pt} and V_{pt} are the combined plastic moment and shear force of the top angle leg adjacent to the column flange and d_2 is the distance shown in Fig.2.

The main differences between the Chen model and the Annex J model are due to the fact that the former considers also moment-shear plastic interaction. In addition, with reference to the complete yielding failure mode, different definitions of the distance between the plastic hinges are used. In fact, according to Chen model, the above distance is given by:

$$m_c = l_t - e_{min} - d_t/2 - 1.5\, t_t - r_t \tag{14}$$

(where d_t is the bolt head diameter), while it is defined through the parameter m in Annex J (11). It is evident that m and m_c provide the upper and the lower bound, respectively, for the distance between the plastic hinges in complete yielding failure mode.

In order to evaluate the reliability of the models previously described, the avalaible experimental results concerning top and seat angles with single/double web angle connections have been analysed. In particular, 29 experimental results collected in the SCDB data Bank [7] and in the Sericon data bank [8] have been considered. A first group of experimental tests, due to Azizinamini et al. [9,10], provides the behaviour of top and seat angles with double web angles connections (T-S-DW), while a second group of tests, due to Schleich et al. [8], refers to top and seat angles with single web angle connections (T-S-SW).

The experimental flexural resistance of the joints has been conventionally assumed equal to the experimental value of the $M - \varphi$ curve corresponding to a secant stiffness equal to $K_{\varphi,s} = K_{\varphi,i}/3$, where $K_{\varphi,i}$ is the initial rotational stiffness (the slope of the elastic reloading branch of the $M - \varphi$ curve, when it is not specified by the test authors). In addition, in order to define for the moment-rotation curve predicted according to the Chen power model [2,3,4] a knee (i.e. a design value) compatible with Annex J, the same procedure has been applied considering the curve evaluated on the basis of the three parameters $K_{\varphi,i}$, M_u and n and by adopting for the shape factor n the values suggested in [11].

The influence of the m and m_c parameters is evidenced in Table 2 and Figures 4a and 4b by the comparison between the results obtained with the Chen model and those obtained with the procedure previously described and by assuming an m definition compatible with Annex J (11). Furthermore, in Table 3, the main statistical parameters of the ratio $M_{j,Rd}/M_{exp}$ between the predicted joint resistance $M_{j,Rd}$ and the experimental one M_{exp} are shown, both with reference to the single groups of tests and with reference to all the available experimental results ($M_{j,Rd}$ defines the knee of the $M - \varphi$ curve).

It is important to underline that generally the Chen model provides a slight overestimation of the design flexural resistance while the use of an m value compatible with Annex J gives rise to an underestimation of the resistance.

The role of all joint components can be evidenced by comparing the results obtained for the different groups of tests. In fact, the tests of Schleich et al. are characterized by the use of the same angle both for the beam web-to-column flange connection and for the beam flange-to-column flange connection. In addition, the angle thickness is very significant, as the ratio between the column flange thickness and the angle thickness is close to 1.0 (Table 2). On the contrary, the tests of Azizinamini et al. have a small angle thickness compared to

Tab. 2 - Influence of m parameter

N. test	CODE	AUTHORS	Joint type	M_{exp} (kNm)	Chen model			Model m as (11)		$\frac{t_f}{t_{wa}}$	$\frac{t_f}{t_a}$
					M_u (kNm)	$M_{j,Rd}$ (kNm)	$\frac{M_{j,Rd}}{M_{exp}}$	M_{Rd} (kNm)	$\frac{M_{j,Rd}}{M_{exp}}$		
1	8S1	Azizinamini et al.	T-S-DW	30.39	38.55	37.83	1.24	17.79	0.59	2.56	2.05
2	8S2	Azizinamini et al.	T-S-DW	38.43	50.73	47.78	1.24	22.54	0.59	2.56	1.71
3	8S3	Azizinamini et al.	T-S-DW	39.12	47.15	46.02	1.18	20.78	0.53	2.56	2.05
4	8S4	Azizinamini et al.	T-S-DW	20.65	21.15	21.15	1.02	13.39	0.65	2.56	1.71
5	8S5	Azizinamini et al.	T-S-DW	33.49	43.12	42.73	1.28	21.82	0.65	2.56	1.71
6	8S6	Azizinamini et al.	T-S-DW	25.13	27.24	27.16	1.08	15.29	0.61	2.56	2.05
7	8S7	Azizinamini et al.	T-S-DW	40.50	35.56	35.30	0.87	18.59	0.46	2.56	1.71
8	8S8	Azizinamini et al.	T-S-DW	36.36	40.86	39.41	1.08	17.31	0.48	2.56	2.05
9	8S9	Azizinamini et al.	T-S-DW	35.28	52.80	45.88	1.30	21.93	0.62	2.56	1.71
10	8S10	Azizinamini et al.	T-S-DW	44.21	76.64	39.19	0.89	35.43	0.80	2.56	1.28
11	14S1	Azizinamini et al.	T-S-DW	63.20	81.78	78.15	1.24	41.47	0.66	3.60	2.40
12	14S2	Azizinamini et al.	T-S-DW	87.45	168.17	153.83	1.76	80.05	0.92	3.60	1.80
13	14S3	Azizinamini et al.	T-S-DW	65.31	71.15	66.53	1.02	35.84	0.55	3.60	2.40
14	14S4	Azizinamini et al.	T-S-DW	77.22	103.80	98.85	1.28	59.19	0.77	2.40	2.40
15	14S5	Azizinamini et al.	T-S-DW	89.44	84.53	78.07	0.87	40.34	0.45	3.60	2.40
16	14S6	Azizinamini et al.	T-S-DW	89.30	133.01	68.01	0.76	60.23	0.67	3.60	1.80
17	14S8	Azizinamini et al.	T-S-DW	131.40	178.32	91.18	0.69	88.31	0.67	3.60	1.44
18	14S9	Azizinamini et al.	T-S-DW	99.17	133.01	68.01	0.69	60.23	0.61	3.60	1.80
19	103001	Schleich et al.	T-S-SW	37.91	70.44	61.63	1.63	25.63	0.68	1.41	1.41
20	130002	Schleich et al.	T-S-SW	47.92	82.88	42.38	0.88	29.96	0.63	1.11	1.11
21	103003	Schleich et al.	T-S-SW	43.99	107.27	54.85	1.25	36.96	0.84	1.41	1.41
22	103004	Schleich et al.	T-S-SW	60.01	123.02	62.91	1.05	43.94	0.73	1.11	1.11
23	103005	Schleich et al.	T-S-SW	77.33	144.08	73.68	0.95	46.22	0.60	1.41	1.41
24	103045	Schleich et al.	T-S-SW	44.59	70.44	61.63	1.38	25.63	0.57	1.41	1.41
25	103046	Schleich et al.	T-S-SW	42.97	82.88	42.38	0.99	29.96	0.70	1.11	1.11
26	103047	Schleich et al.	T-S-SW	60.27	107.27	54.85	0.91	36.96	0.61	1.41	1.41
27	103048	Schleich et al.	T-S-SW	36.00	123.02	62.91	1.75	43.94	1.22	1.11	1.11
28	103049	Schleich et al.	T-S-SW	49.85	144.08	73.68	1.48	46.22	0.93	1.41	1.41
29	103050	Schleich et al.	T-S-SW	62.27	164.91	84.33	1.35	55.10	0.88	1.11	1.11

Tab. 3 - Statistical results of the comparison

	Chen et al. model		Model with m as (11)	
	Average	Standard deviation	Average	Standard deviation
Azizinamini et al.	1.08	0.27	0.63	0.12
Schleich et al.	1.24	0.30	0.76	0.19
Total	1.14	0.29	0.68	0.16

that of the column flange. In particular, with reference to the web angle, the above mentioned ratio ranges from 2.40 to 3.60.

As a consequence of the above geometrical features, the weakest component is given by the angles (both top $t.ta$ and web $t.wa$ angles) in the specimens tested by Azizinamini et al. On the contrary, a significant interaction between the column flange ($t.fc$) and web angles occurs in the tests of Schleich et al.

The proposed method can be improved provided that, with reference to the case of complete yielding, a more appropriate value m^* of the distance between the angle plastic hinges is defined considering that the values proposed by Annex J and Chen represent the boundary values of the variability range. The following definition of m^* can be adopted:

$$m^* = m - \psi\,(d_t/2 + t_t/2 + 0.2\,r_t) \tag{15}$$

where ψ is a coefficient ranging from 0 to 1. Obviously, the 0 value corresponds to the Annex J definition while the value 1.0 corresponds to the Chen model.

The m^* parameter is used both with reference to the top angle and with reference to the web angle. In the latter case m^* defines the location of the yield line at the level of the upper bolt row of the web angle (Fig.2).

The coefficient ψ can be related to the ratio between the flexural stiffness of the angle leg attached to the column flange and the axial stiffness of the bolts connecting the angles to the column. On the basis of the experimental tests of Azizinamini et al., which are characterized by the collapse of top and web angles, the following relationship has been found:

Tab. 4 - Reliability of the proposed method including the coefficient ψ

N. test	CODE	AUTHORS	M_{exp} (kNm)	Proposed method									
				Collapse mode				ψ		$M_{jRd}^{(ta)}$ (kNm)	$M_{jRd}^{(wa)}$ (kNm)	M_{Rd} (kNm)	$\frac{M_{Rd}}{M_{exp}}$
				row 1	row 2	row 3	row 4	top ang	web ang				
1	8S1	Azizinamini et al.	30.39	t.ta	t.wa	t.wa	-	0.86	1.00	25.63	9.05	34.68	1.14
2	8S2	Azizinamini et al.	38.43	t.ta	t.wa	t.wa	-	0.63	1.00	30.36	8.40	38.76	1.01
3	8S3	Azizinamini et al.	39.12	t.ta	t.wa	t.wa	-	0.86	1.00	34.17	7.54	41.71	1.07
4	8S4	Azizinamini et al.	20.65	t.ta	t.wa	t.wa	-	1.00	1.00	8.84	10.72	19.56	0.95
5	8S5	Azizinamini et al.	33.49	t.ta	t.wa	t.wa	-	0.83	1.00	28.54	7.64	36.18	1.08
6	8S6	Azizinamini et al.	25.13	t.ta	t.wa	t.wa	-	1.00	1.00	15.76	10.21	25.97	1.03
7	8S7	Azizinamini et al.	40.50	t.ta	t.wa	t.wa	-	0.83	1.00	21.41	9.14	30.55	0.75
8	8S8	Azizinamini et al.	36.36	t.ta	t.wa	t.wa	-	0.94	1.00	35.19	7.90	43.09	1.19
9	8S9	Azizinamini et al.	35.28	t.ta	t.wa	t.wa	-	0.73	1.00	38.51	7.53	46.04	1.31
10	8S10	Azizinamini et al.	44.21	t.ta	t.wa	t.wa	-	0.25	1.00	41.91	7.39	49.30	1.12
11	14S1	Azizinamini et al.	63.20	t.ta	t.wa	t.wa	t.wa	0.83	1.00	43.87	22.47	66.34	1.05
12	14S2	Azizinamini et al.	87.45	t.ta	t.wa	t.wa	t.wa	0.42	1.00	84.11	15.41	99.52	1.14
13	14S3	Azizinamini et al.	65.31	t.ta	t.wa	t.wa	t.wa	0.83	1.00	43.87	15.33	59.20	0.91
14	14S4	Azizinamini et al.	77.22	t.ta	t.wa	t.wa	t.wa	0.83	0.95	43.87	41.17	85.04	1.10
15	14S5	Azizinamini et al.	89.44	t.ta	t.wa	t.wa	t.wa	0.91	1.00	50.95	22.32	73.27	0.82
16	14S6	Azizinamini et al.	89.30	t.ta	t.wa	t.wa	t.wa	0.53	1.00	72.17	19.93	92.10	1.03
17	14S8	Azizinamini et al.	131.40	t.ta	t.wa	t.wa	t.wa	0.00	1.00	80.20	14.15	94.35	0.72
18	14S9	Azizinamini et al.	99.17	t.ta	t.wa	t.wa	t.wa	0.53	1.00	72.17	19.93	92.10	0.93
19	103001	Schleich et al.	37.91	t.ta	t.wa	t.fc	-	0.40	0.57	27.87	-	29.83	0.79
20	130002	Schleich et al.	47.92	t.ta	t.fc	t.fc	-	0.00	0.17	27.87	-	29.96	0.63
21	103003	Schleich et al.	43.99	t.ta	t.wa	t.fc	-	0.56	0.70	48.38	-	52.15	1.19
22	103004	Schleich et al.	60.01	t.ta	t.fc	t.fc	-	0.16	0.34	43.25	-	48.26	0.80
23	103005	Schleich et al.	77.33	t.ta	t.wa	t.fc	-	0.56	0.70	64.03	-	65.73	0.85
24	103045	Schleich et al.	44.59	t.ta	t.wa	t.fc	-	0.40	0.57	27.87	-	29.83	0.67
25	103046	Schleich et al.	42.97	t.ta	t.fc	t.fc	-	0.00	0.17	27.87	-	29.96	0.70
26	103047	Schleich et al.	60.27	t.ta	t.wa	t.fc	-	0.56	0.70	48.38	-	52.15	0.87
27	103048	Schleich et al.	36.00	t.ta	t.fc	t.fc	-	0.16	0.34	43.25	-	48.26	1.34
28	103049	Schleich et al.	49.85	t.ta	t.wa	t.fc	-	0.56	0.70	64.03	-	65.73	1.32
29	103050	Schleich et al.	62.27	t.ta	t.fc	t.fc	-	0.16	0.35	57.19	-	60.59	0.97

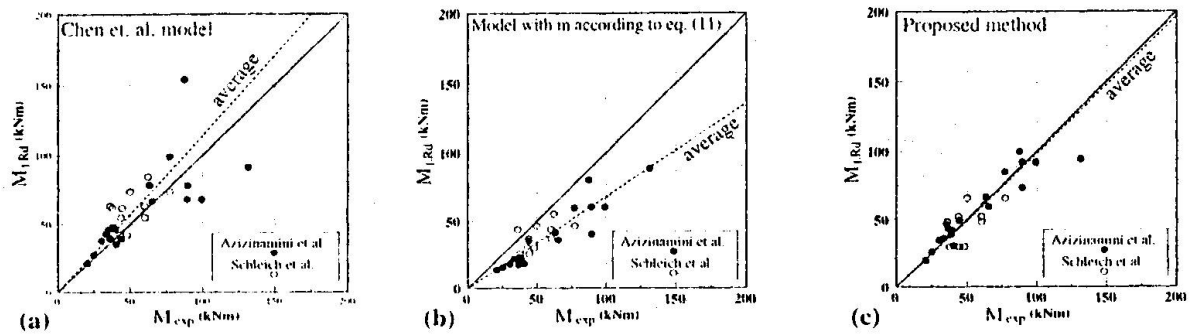

Fig.4 - Reliability of different procedures for predicting the flexural resistance

$$0 \le \psi = 1.89 - 3.22\left(\frac{t}{d_b\sqrt{m/d_b}}\right) \le 1 \tag{16}$$

In Tab. 4 and fig. 4c, the comparison between the predicted values of the flexural resistance $M_{j,Rd}$, evaluated with the proposed procedure including also the coefficient ψ, and the experimental ones are shown.

A good degree of accuracy can be observed, as it is evidenced by the average value and the standard deviation of $M_{j,Rd}/M_{exp}$ ratio (Tab.5). In particular, the check of the resistance of all joint components has led to a good degree of approximation also with reference to the tests of Schleich et al.

With reference to the cases in which the weakest component is represented by the top and web angles, it is useful to underline that the contribution to the jo[illegible]tance of the web angle is not negligible. In fact, this contribution ranges from 15% [illegible] of the global joint resistance with an average value equal to 26% as it can be note[illegible]able 4 where the contributions to the joint flexural resistance $M_{j,Rd}^{(ta)}$ and $M_{j,Rd}^{(wa)}$ due to the top and web angles, respectively, are given.

5. Simplified procedure for evaluating the joint design resistance

Even though the advantages of a general procedure accounting for all joint components have been clarified in the previous section, a simplified method could be adopted provided that the joint resistance is governed by angles and, in addition, the bolts of the web angles are closely spaced to assure the failure as a bolt group rather than individually. In this case, the design resistance of the web angle can be obtained as the minimun value given by equation (5) and equations (9) and (10), where $l_{eff} = L_{wa}$ has to assumed.

Moreover, it can be observed that the resistance corresponding to the first collapse mode, given by equation (5) can be equivalently obtained by means of the T-Stub model (equation (8)) provided that the following value of the parameter m' is adopted:

$$m' = \frac{\sqrt{3}\ t_{wa}}{2\left[-\frac{\sqrt{3}\ln 3}{4\alpha} + \frac{\sqrt{3}\ln\left[\sqrt{\alpha^2+3}+\alpha\right]}{2\alpha} + \frac{\sqrt{3}\sqrt{\alpha^2+3}}{6} - \frac{\sqrt{3}\,\alpha}{6}\right]} \tag{17}$$

Therefore, the joint design resistance can be evaluated by means of the following relationship:

$$M_{j,Rd} = F_{tt,Rd}\,h_t + F_{tw,Rd}\,h_w \tag{18}$$

where $F_{tt,Rd}$ is the design resistance of the top angle evaluated according to the previous section, $F_{tw,Rd}$ is the design resistance of the web angle computed as the minimum value given by the equations (8) (with m' given by eq. (17)), (9) and (10). In addition, the lever arm h_w of the web angle contribution is given by d_p (equation (6)) plus the distance between the lower edge of web angles and the center of compression (d_1), when the complete yielding of flange arises, or by the distance between the middle length of the web angle and the centre of compression for collapse modes 2 and 3.

Tab. 5 - Statistical results of the comparison between the predicted and experimental resistance

	Proposed procedure (all joint components)		Simplified proposed procedure (top and web angle components)	
	Average	Standard deviation	Average	Standard deviation
Azizinamini et al.	1.02	0.15	1.05	0.17
Schleich et al.	0.92	0.25	1.31	0.37
Total	0.98	0.20	1.15	0.29

In table 5, the comparison between the predicted values and the experimental ones of the joint flexural resistance is given with reference to the main statistical parameters of the ratio $M_{j,Rd}/M_{exp}$.

A good degree of approximation of the simplified method can be mainly observed with reference to the Azizinamini et al. tests, which satisfy the basic hypotheses of the method. This degree of accuracy, as expected, is comparable with the one obtained by the Chen model. With respect to this, the proposed procedure presents further simplifications. In fact, the use of the shear-moment interaction according to eq.(3) allows to compute in closed form the overall shear force (5) and the corresponding location (6), due to the web angles. Numerical procedures are required by the Chen model. In addition, even though simplified, also this approach can be considered within the framework of Annex J. However, it should be underlined that a parametric analysis with the general method including all joint components is necessary with the aim to provide the «a priori» knowledge of the validity range of the simplified procedure.

6. Conclusion

The extension of the component method of Annex J to the case of connections with angles, including web angles, has been proposed in this paper. The reliability of the suggested procedure has been confirmed by the comparison with the available experimental tests on this connection typology. The importance to account for all joint components has been underlined considering tests from different authors, i.e. characterized by different geometrical details. In addition, a simplified procedure has been also proposed. This procedure can be applied provided that the web angles fail involving their full depth.

7. References

[1] Eurocode 3, part 1.1: Revised Annex J: Joints in Building Frames
[2] N. Kishi, W.F. Chen, K.G. Matsuoka, S.G. Nomachi: Moment-Rotation Relation of Top- and Seat-Angle with Double Web-Angle Connections, Proc. Workshop on Connections and the Behaviour, Strength and Design of Steel Structures, Elsevier Applied Science, London ,1987
[3] N. Kishi, W.F. Chen, K.G. Matsuoka, S.G. Nomachi: Moment-Rotation Relation of Single-Double Web-Angle Connections, Proc. Workshop on Connections and the Behaviour, Strength and Design of Steel Structures, Elsevier Applied Science, London ,1987
[4] N. Kishi, W.F. Chen: Moment-Rotation Relations of Semirigid Connections with Angles, Journal of Structural Engineering, ASCE, Vol.116, No. 7, July, 1990.
[5] C. Faella, V. Piluso, G. Rizzano: Modelling of the moment-rotation curve of welded connections: proposals to improve eurocode 3 Annex J, C.T.A., Italian Conference on Steel Construction, Riva del Garda, October, 1995.
[6] C. Faella, V. Piluso, G. Rizzano: Some proposals to improve EC3-Annex J approach for predicting the moment-rotation curve of extended end plate connections, C.T.A., Italian Conference on Steel Construction, Riva del Garda, October, 1995.
[7] N. Kishi, W.F. Chen: Database of Steel Beam-to-Column Connections, Structural Engineering Report, No. CE-STR-86-26, School of Civil Engineering, Purdue University, 1986.
[8] K. Weinand: SERICON - Databank on joints in building frames, Proceedings of the 1st COST C1 Workshop, Strasbourg, 28-30 October.
[9] A. Azizinamini, J.H. Bradburn, J.B. Radziminski: Initial Stiffness of Semi-Rigid Steel Beam-to-Column Connections, Journal of Constructional Steel Research, Vol. 8, 1987.
[10] A. Azizinamini, J.B. Radziminski: Static and Cyclic Performance of Semirigid Steel Beam-to-Column Connections, Journal of Structural Engineering, Vol.115, No.12, 1989.

[11] J.Y.R. Liew, D.W. White, W.F. Chen: Limit State Design of Semi-Rigid Frames using Advanced Analysis: Part 1: Connection Modeling and Classification, Journal of Constructional Steel Research, Vol.26, 1993.

APPENDIX

With reference to Fig.1, the proposed procedure can be performed by means of the following steps:

a) evaluation of the design tension resistance of the first bolt row ($F_{t1,Rd}$) as the one of the weakest component:

$$F_{t1,Rd} = \min \{ V_{wp,Rd}/\beta \, , \, F_{c,wc,Rd} \, , \, F_{c,fb,Rd} \, , \, F_{v,sa,Rd} \, , \, F_{b,sap,Rd} \, , \, F_{c,sap,Rd} \, , \, F_{t1,fc,Rd} \, , \, F_{t1,wc,Rd} \, , \, F_{t1,wa,Rd} \, , \, F_{v1,Rd} \, , \, F_{b,sap,Rd} \, , \, F_{b,fb,Rd} \, , \, F_{t,sap,Rd} \} \tag{A.1}$$

where β is a coefficient accounting for the influence of the actions, at the member ends, on the shear force in the panel zone [1].

b) computation of the design tension resistance $F_{t2,Rd}$ of the second bolt row (i.e. the upper bolt row of the web angle) through the minimum value provided by the following limitations (A.2-A.5):

$$F_{t2,Rd} = \min \{ V_{wp,Rd}/\beta - F_{t1,Rd} \, , \, F_{c,wc,Rd} - F_{t1,Rd} \, , \, F_{c,fb,Rd} - F_{t1,Rd} \, , \, F_{v,sa,Rd} - F_{t1,Rd} \, , \, F_{b,sap,Rd} - F_{t1,Rd} \, , \, F_{c,sap,Rd} - F_{t1,Rd} \} \tag{A.2}$$

which accounts for the limitations to the resultant of the first two bolt rows due to the web panel in shear, the column web in compression, the beam flange and web in compression and the seat angle (in shear, bearing and compression);

$$F_{t2,Rd} = \min \{ F_{t2,fc,Rd} \, , \, F_{t(1+2),fc,Rd} - F_{t1,Rd} \} \tag{A.3}$$

which takes into account the limitations due to the column flange in bending considering the second bolt row both individually and as constituting a bolt group with the first bolt row;

$$F_{t2,Rd} = \min \{ F_{t2,wc,Rd} \, , \, F_{t(1+2),wc,Rd} - F_{t1,Rd} \} \tag{A.4}$$

which is a limitation similar to the previous one, but with reference to the column web in tension;

$$F_{t2,Rd} = \min \{ F_{t2,wa,Rd} \, , \, F_{v2,Rd} \, , \, F_{b2,wap,Rd} \, , \, F_{b2,wb,Rd} \, , \, F_{t2,wap,Rd} \, , \, F_{t2,wb,Rd} \} \tag{A.5}$$

which considers the limitations due to the web angle in bending, the bolts in shear, the web angle plate in bearing, the web beam in bearing, the web angle plate in tension and the web beam in tension.

c) evaluation of the design resistance of the subsequent tension bolt rows (i.e. that of the i-th bolt row $F_{ti,Rd}$) as the minimum value obtained from the following limitations (eq. A.6-A.12):

$$F_{ti,Rd} = \min \{ V_{wp,Rd}/\beta - \sum_{j=1}^{i-1} F_{tj,Rd} \, , \, F_{c,wc,Rd} - \sum_{j=1}^{i-1} F_{tj,Rd} \, , \, F_{c,fb,Rd} - \sum_{j=1}^{i-1} F_{tj,Rd} \, , \, F_{v,sa,Rd} - \sum_{j=1}^{i-1} F_{tj,Rd} \, , \, F_{b,sap,Rd} - \sum_{j=1}^{i-1} F_{tj,Rd} \, , \, F_{c,sap,Rd} - \sum_{j=1}^{i-1} F_{tj,Rd} \} \tag{A.6}$$

which is similar to limitation (2), but including all the bolt rows above the i-th one;

$$F_{ti,Rd} = \min \left\{ F_{ti,fc,Rd} \, , \, F_{t(i+(i-1)),fc,Rd} - F_{t(i-1),Rd} \, , \, \ldots\ldots \, , \, F_{t(i+(i-1)+\ldots+1),fc,Rd} - \sum_{j=1}^{i-1} F_{tj,Rd} \right\} \tag{A.7}$$

$$F_{ti,Rd} = \min \left\{ F_{ti,wc,Rd} \, , \, F_{t(i+(i-1)),wc,Rd} - F_{t(i-1),Rd} \, , \, \ldots\ldots \, , \, F_{t(i+(i-1)+\ldots+1),wc,Rd} - \sum_{j=1}^{i-1} F_{tj,Rd} \right\} \tag{A.8}$$

$$F_{ti,Rd} = \min \left\{ F_{ti,wa,Rd} \, , \, F_{t(i+(i-1)),wa,Rd} - F_{t(i-1),Rd} \, , \, \ldots\ldots \, , \, F_{t(i+(i-1)+\ldots+1),wa,Rd} - \sum_{j=1}^{i-1} F_{tj,Rd} \right\} \tag{A.9}$$

$$F_{ti,Rd} = \min \left\{ F_{ti,wap,Rd} \, , \, F_{t(i+(i-1)),wap,Rd} - F_{t(i-1),Rd} \, , \, \ldots\ldots \, , \, F_{t(i+(i-1)+\ldots+1),wap,Rd} - \sum_{j=1}^{i-1} F_{tj,Rd} \right\} \tag{A.10}$$

$$F_{ti,Rd} = \min \left\{ F_{ti,wb,Rd} \, , \, F_{t(i+(i-1)),wb,Rd} - F_{t(i-1),Rd} \, , \, \ldots\ldots \, , \, F_{t(i+(i-1)+\ldots+1),wb,Rd} - \sum_{j=1}^{i-1} F_{tj,Rd} \right\} \tag{A.11}$$

$$F_{ti,Rd} = \min \{ F_{vi,Rd} \, , \, F_{bi,wap,Rd} \, , \, F_{bi,wb,Rd} \} \tag{A.12}$$

d) computation of the design moment resistance $M_{j,Rd}$ of the beam-to-column joint by means of the relationship:

$$M_{j,Rd} = \sum_{i=1}^{r} h_i \, F_{ti,Rd} \tag{A.13}$$

in which h_i is the distance between the i-th bolt row and the centre of compression and r is the number of bolt rows in tension.