Zeitschrift: IABSE reports = Rapports AIPC = IVBH Berichte
Band: 75 (1996)

Artikel: Semi-rigid behaviour of beam-to-column minor-axis joints
Autor: Costa Neves, Luís / Gomes, Fernando
DOI: https://doi.org/10.5169/seals-56911

Nutzungsbedingungen
Die ETH-Bibliothek ist die Anbieterin der digitalisierten Zeitschriften auf E-Periodica. Sie besitzt keine Urheberrechte an den Zeitschriften und ist nicht verantwortlich für deren Inhalte. Die Rechte liegen in der Regel bei den Herausgebern beziehungsweise den externen Rechteinhabern. Das Veröffentlichen von Bildern in Print- und Online-Publikationen sowie auf Social Media-Kanälen oder Webseiten ist nur mit vorheriger Genehmigung der Rechteinhaber erlaubt. Mehr erfahren

Conditions d'utilisation
L'ETH Library est le fournisseur des revues numérisées. Elle ne détient aucun droit d'auteur sur les revues et n'est pas responsable de leur contenu. En règle générale, les droits sont détenus par les éditeurs ou les détenteurs de droits externes. La reproduction d'images dans des publications imprimées ou en ligne ainsi que sur des canaux de médias sociaux ou des sites web n'est autorisée qu'avec l'accord préalable des détenteurs des droits. En savoir plus

Terms of use
The ETH Library is the provider of the digitised journals. It does not own any copyrights to the journals and is not responsible for their content. The rights usually lie with the publishers or the external rights holders. Publishing images in print and online publications, as well as on social media channels or websites, is only permitted with the prior consent of the rights holders. Find out more

Download PDF: 09.01.2026

ETH-Bibliothek Zürich, E-Periodica, https://www.e-periodica.ch

Semi-rigid behaviour of beam-to-column minor-axis joints

Luís COSTA NEVES
Civil Engineer, Msc
University of Coimbra
Portugal

Fernando GOMES
Civil Engineer, Msc
University of Coimbra
Portugal

Luís Costa Neves, born 1968, got his civil engineering degree from the University of Coimbra in 1992 and his Master from the same University in 1996, where he is assistant since 1992. His research interests are mainly in the field of semi-rigid behaviour of steel structures.

Fernando Gomes, born 1955, got his civil engineering degree from the University of Coimbra (where he is assistant) in 1978 and his Master from the Technical Univ. of Lisbon. His research interests are mainly in the field of semi-rigid behaviour of steel structures, and he is national representative of european project COST C1.

Summary

The behaviour of beam-to-column minor-axis joints is characterised by a non-linear moment-rotation curve with possible high stiffness and moment capacity. Although models to evaluate the strength of the column web based on curved yield lines are available, there are no means of predicting analytically its stiffness. A numerical study highlighting the major parameters determining the stiffness is described. Finally, simple formulae to predict initial, secant and membrane stiffness, based on the numerical study and on a physical model are given.

1. Introduction

The rotational behaviour of a minor-axis joint may be characterised, as any other joint, by the behaviour of its basic components: bolts, cleats, end plate, column web loaded out of its plan. This is the design philosophy of EUROCODE 3 [2], as explained on its annex J, and known as "component method". For the type of joint covered by this paper, EUROCODE 3 gives application rules for the characterisation of all components but one, that plays a fundamental role: the column web loaded out of its plan, which typical moment-rotation $(M-\phi)$ curve is shown in Fig. 1. Also shown are the main geometrical characteristics of such joint.

Rotational behaviour of the column web in a minor axis joint may be characterised by the determination of several key parameters: plastic moment (M_{pl}), rotation capacity (ϕ_{pl}) and stiffness (S) corresponding to a given moment level. Studies recently published by Gomes [3], [6], and by Gomes, Jaspart and Maquoi [5] give quite accurate methods to predict the plastic moment, based on curved yield lines. It has also been shown, namely in [4], that these joints generally have a good rotation capacity. As stiffness is concerned, a distinction has to be made (Fig. 1) between elastic or initial stiffness (S_i), secant stiffness (S_j) - namely to the plastic moment - and membrane stiffness (S_m) - that characterises the post-plastic behaviour. There aren't, on the author's knowledge, proposals for the prediction of these stiffnesses. Nevertheless, there are some general studies, mainly related to RHS, that could identify relevant parameters. CZECHOWSKI *et al* [1], propose some formulae to predict the initial stiffness of a RHS joint, problem that may be, in some circumstances similar to a minor-axis joint.

The evaluation of those joint stiffnesses has been the objective of a research program started three years ago at the University of Coimbra and which conclusions have been recently published [10]. Due to the large number of parameters involved, it is difficult to obtain analytical direct solutions; a parametric finite element study has then been conducted, and its results were used to propose simple formulae and to calibrate simple physical models.

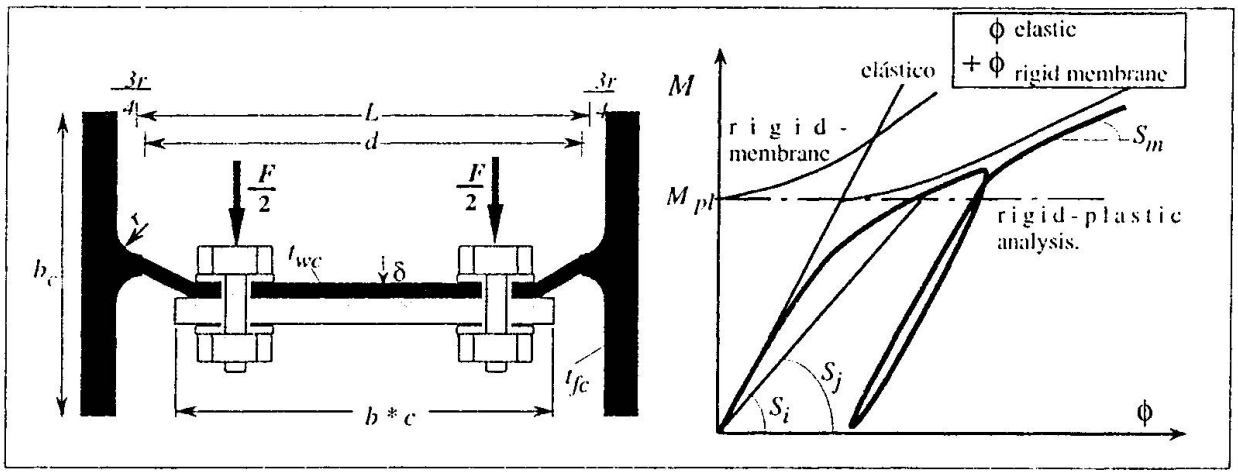

Fig. 1 - Column web in a minor-axis joint; geometrical characteristics and typical behaviour

2. Characterisation of web deformation - Parametric study

Relevant parameters considered in this study are:

- Type of web's failure mechanism: local - Fig. 2a (involving one of the forces composing the bending moment transmitted from the beam) and global - Fig. 2b (involving those two forces). Local mechanism occurs for large values of h (Fig. 2c) and global mechanism for small values of h.. Non-dimensionally, this may be controlled by the parameter $\gamma = h/L$. Boundaries between these two types of mechanisms have been defined by Gomes [3].

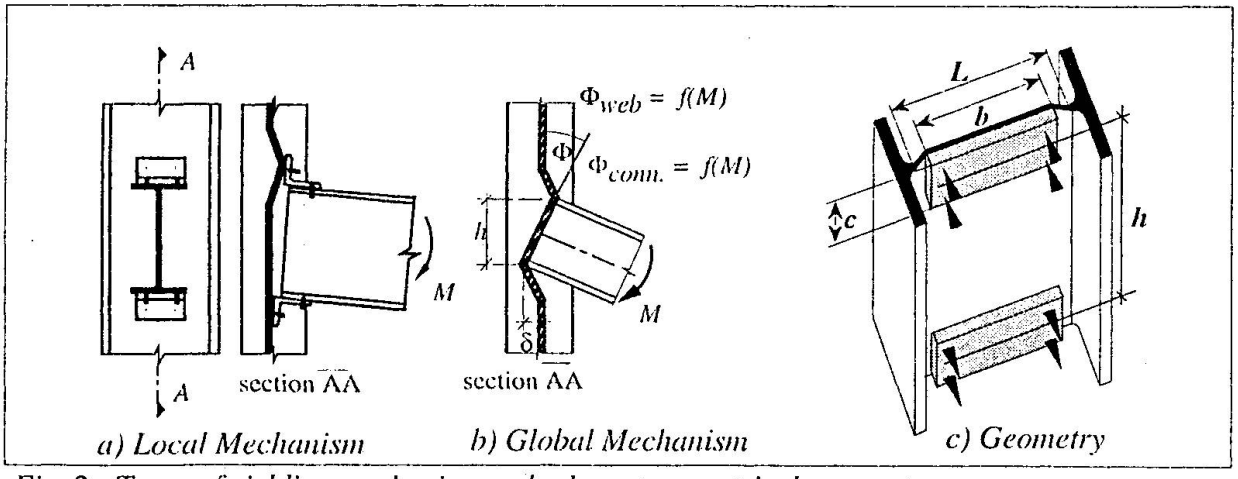

Fig. 2 - Types of yielding mechanism and relevant geometrical parameters

- Dimensions $b \times c$ of the loaded area (Fig. 1 and 2c), to which correspond, respectively, the non-dimensional parameters $\beta = b/L$ and $\alpha = c/L$.

- Slenderness of the column web, defined by the parameter $\mu = L/t_{wc}$ (Fig. 1), and that plays a fundamental role in the post-plastic behaviour of this joint component. For commercial hot rolled sections of IPE and HE series, μ varies approximately between 10 and 50.

- Restraint offered by the column flanges to the web's rotation; two situations have been considered:

i) tridimensional joint, Fig. 3a, where major-axis beams prevent rotation of the column flanges. In this situation the column web may be modelled as a plate clamped at the junction with the flanges.

ii) minor-axis joint alone, Fig. 3b, where the column flanges are free to rotate. Restriction to the web's rotation may be expressed by a parameter ψ, that depends on the section geometrical characteristics - Fig. 1;

$$\psi = \frac{\left(\frac{L}{t_{wc}}\right)}{\left(\frac{b_c}{L}\right)\cdot\left(\frac{t_{fc}}{t_{wc}}\right)^3} \tag{1}$$

where $\psi = 0$ corresponds to a clamped web at the junctions with the flanges. Variation of factor ψ for sections of the European series IPE and HE has been presented in [10]. In this parametric study both values of $\psi = 0$ (corresponding to a tridimensional joint) and $\psi = 22$ (that covers reasonably well and on the safe side European commercial series) have been considered.

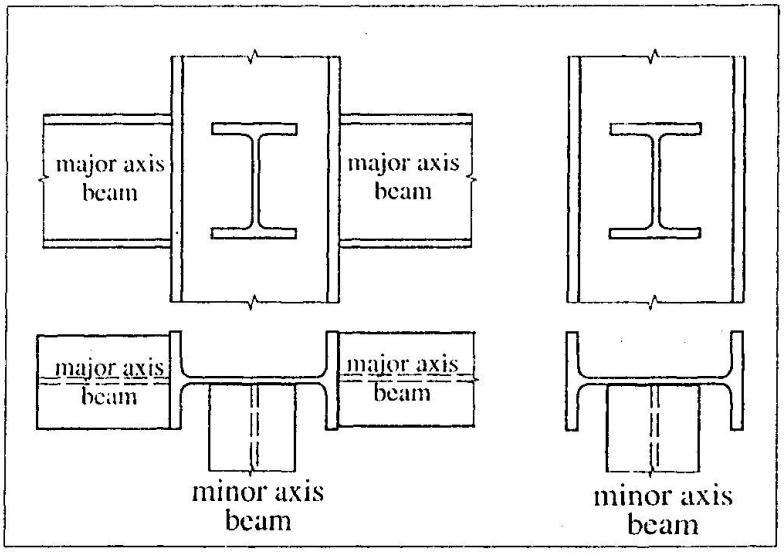

Fig. 3 - (a)Restrained and (b)unrestrained column flanges.

The study has been conducted using the finite element package LUSAS, modelling the column web with eight-noded thick shell elements (LUSAS elements QTS8). Four noded (QTS4) and triangular thick shell elements (TTS6 and TTS3) have also been used respectively in low stress areas and to assure transition between different mesh densities.

Ranges of variation for the different parameters were: $0{,}08 \le \beta \le 0{,}75$, $0{,}05 \le \alpha \le 0{,}2$, $10 \le \mu \le 50$, $0{,}5 \le \gamma \le \infty$. Material has been considered to be elastic-perfectly plastic, according to the von Mises yield criterion. Three types of analysis have been performed: elastic, elasto-plastic, and second-order elasto-plastic. Only this last type of analysis may follow all the moment-rotation (or force displacement) curve shown in Fig. 1. Differences between 1st and 2nd order analysis result from membrane effects, that considerably increase with parameter μ; thinner webs develop more important second order effects.

Further details on this numerical model may be found in [9] and [10]. Its validation has been made comparing: (a) qualitatively general options and results from other works, (b) values obtained for the plastic load F_{pl}, from elasto-plastic first order analysis in the full range of parameters studied, with the theoretical values proposed in [5]. From this comparison a maximum error of ± 5% has been observed. Finally, (c), full non-linear second order curves have been compared with some experimental tests from [4], showing a good agreement between experimental and numerical curves [10].

3. Initial stiffness, S_i

3.1 Fully restrained flanges

The initial (or elastic) stiffness is the initial slope of $M-\phi$ (or $F-\delta$) curve - Fig. 1. From the observation of finite element results in the elastic range, it could be concluded that the web may be modelled as a plate supported at the junction with the flanges and free in the other borders. This model, represented in Fig. 4, has a length equal to L (Fig. 1) and a width l_{eff} that depends on the dimensions of the loaded area:

$$l_{eff} = c + (L-b)\tan\theta \qquad (2) \qquad\qquad \frac{l_{eff}}{L} = \alpha + (1-\beta)\tan\theta \qquad (3)$$

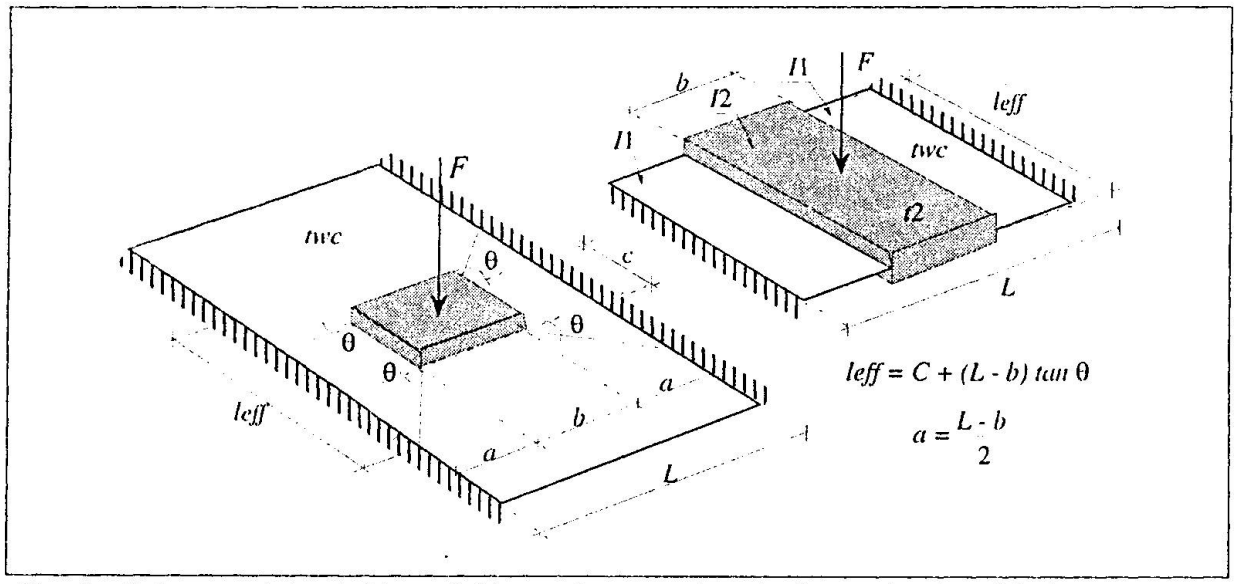

Fig. 4 - Column web loaded by a rigid area $b \times c$, and equivalent strip of width l_{eff}.

Initial stiffness of this strip, computing both flexural and shear deformations, may be easily expressed by:

$$S_i = \frac{2\,E\,l_{eff}\,t_{wc}^3}{a^3 + 2(1+\upsilon)\,a\,t_{wc}^2} \quad ; \quad a = \frac{1}{2}(L-b) \qquad (4)$$

Substituting the value of a and l_{eff} given by eq. (2), taking Poisson's coefficient $\upsilon = 0{,}3$, it is obtained, after introduction of two coefficients k_1 and k_2:

$$S_i = \frac{E\, t_{wc}^3}{L^2} \cdot 16 \frac{\alpha + (1-\beta)\tan\theta}{(1-\beta)^3 + \dfrac{10{,}4(k_1 - k_2\beta)}{\mu^2}} \tag{5}$$

L and t_{wc} are given in Fig. 1, $\alpha = c/L$, $\beta = b/L$, $\mu = L/t_{wc}$, and E is the young modulus.

The term $10{,}4(k_1 - k_2\beta)$ represents the contribution of shear effects to the initial stiffness, and it is shown in [10] that plays an important role for thick webs. Introduction of coefficients k_1 and k_2 is justified from the different influence of shear effects for small values of μ on the model and on the numerical simulations, and thus to correct that effect. Their most convenient values have been shown to be $k_1 = 1{,}5$ and $k_2 = 1{,}63$. Angle θ, from which depends the strip width, results from the condition that initial stiffness of strip model must be equal to the initial stiffness obtained from the finite element analysis, $S_{i,\mathrm{adim}}^{Sim}$ (non-dimensional).

$$\theta = \tan^{-1}\left[\frac{S_{i,\mathrm{adim}}^{Sim}}{16}\left((1-\beta)^2 + \frac{10{,}4}{\mu^2}\frac{(k_1 + k_2\beta)}{(1-\beta)}\right) - \frac{\alpha}{1-\beta}\right] \tag{6}$$

We could verify [10] that angle θ may be approximated, without significant error, by a linear function of β alone:

$$\theta = 35 - 10\beta \tag{7}$$

This proposal for the initial translational stiffness of the column web in a minor-axis joint (for local or global mechanism) is compared in Fig. 5a to 5c with the results from the numerical simulations, for some of the $\mu = L/t_{wc}$ values considered.

In each case initial stiffness is non - dimensionalized with respect to Et_{wc}^3/L^2, and different curves correspond to different values of α. A good agreement could be found between results obtained from application of eqs. (5) and (7) and those obtained from numerical simulations, with a maximum error in the range of parameters studied of 3% and 9%, respectively on the unsafe and on the safe side.

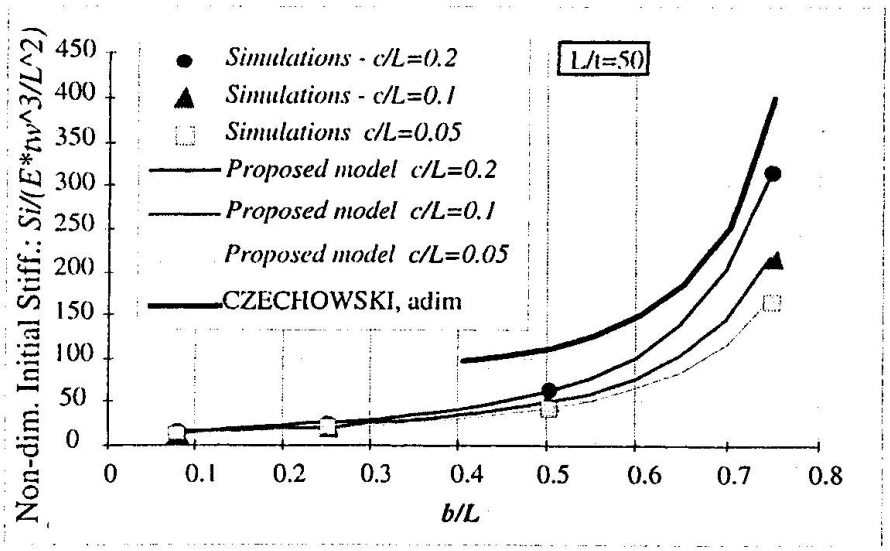

Fig. 5a

Also shown is the proposal of Chechowski [1] for the elastic stiffness of a RHS joint, in a situation similar to the column web in a minor-axis joint [10].

Chechowski's model largely overestimates elastic stiffness, specially for small values of slenderness, μ.

Rotational stiffness, S_i^{ϕ}, may be calculated from translational stiffness, by:

$$S_i^{\phi} = \frac{M}{\phi} = \frac{h^2}{\frac{1}{S_{i1}} + \frac{1}{S_{i2}}} \quad (8)$$

where h is the distance between centres of superior and inferior loaded areas (Fig. 2c), with translational stiffnesses S_{i1} and S_{i2}, calculated from eqs. (5) and (7).

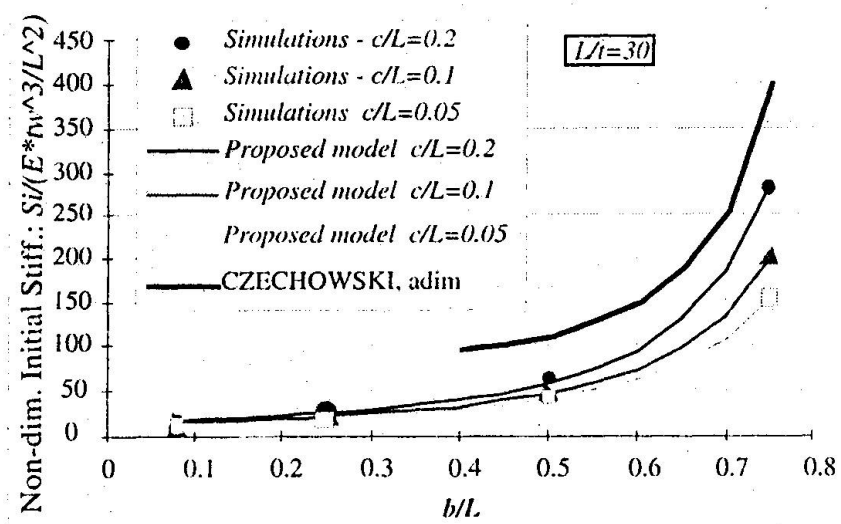

Fig. 5b

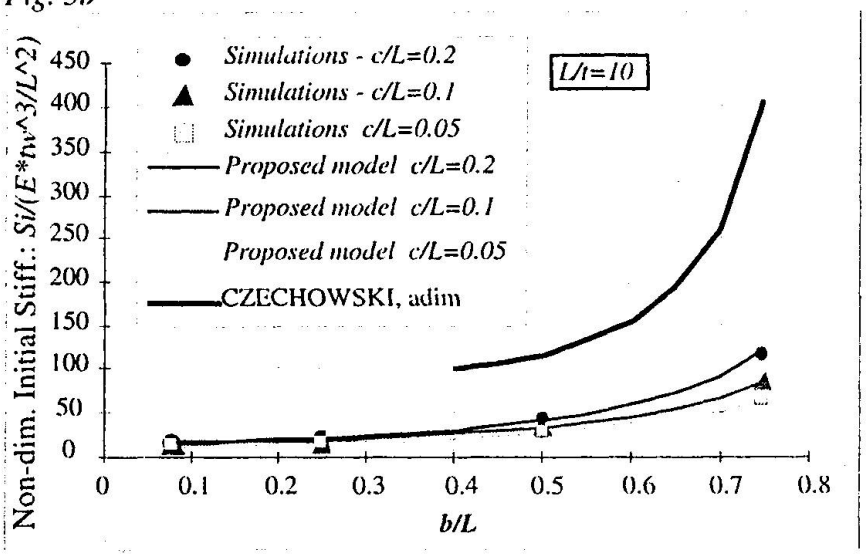

Fig. 5 c

Fig. 5 - Variation of initial translational stiffness with geometrical parameters. Comparison between proposal model, numerical simulations and Czechowski's model

3.2 Column flanges with rotational freedom

Fig. 6 compares non-dimensional rotational stiffness plotted against coefficient β and for different values of α, for fully restrained flanges (Fig. 3a) and for flanges with rotational freedom (Fig. 3b). Initial stiffness decreases with flange rotation. This decrease is more significant for bigger loaded areas, and may be characterised by the coefficient k_{rot}, ratio between initial stiffness for free and restrained flanges [10]:

$$k_{rot} = \frac{S_{i,rot}}{S_i} = \begin{cases} 0{,}52 - 0{,}40\beta & \text{– for HE sections bigger than HEA 400, HEB 500, HEM 600, and IPE sections} \\ 1 & \text{– for HE sections smaller or equal to HEA400, HEB500, HEM600} \end{cases} \quad (9)$$

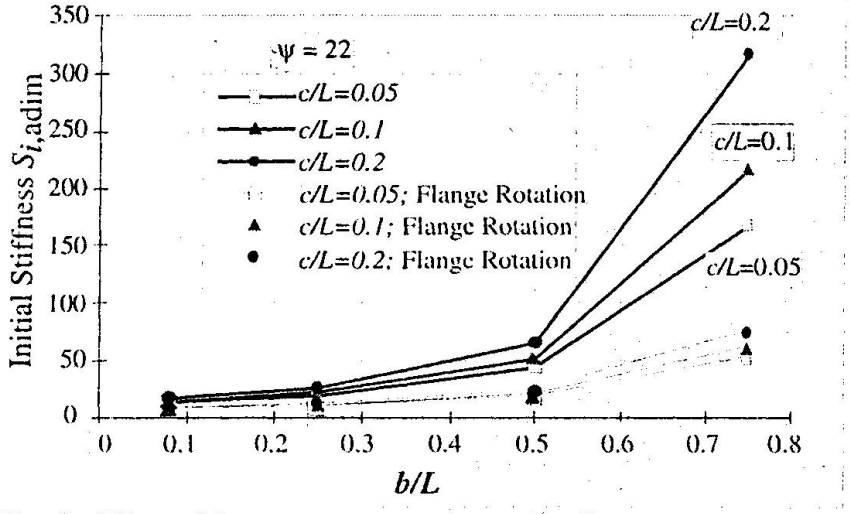

Fig. 6 - Effect of flanges rotation on initial stiffness

4. Secant stiffness, S_j

Annex J of EUROCODE 3 [2] gives a simple way to determine secant stiffness, S_j, to use if $M_j \geq 2/3 M_{j,Rd}$ (i.e. if the moment acting on the joint is greater or equal to 2/3 of its resistant moment), dividing the initial stiffness, S_i, from a coefficient η, given on that annex for the types of joints actually covered. For the column web in a minor axis joint, we propose:

$$S_j = \begin{cases} \dfrac{S_i}{\eta} & \text{– Restrained flanges or column section smaller or equal to HEA 400, HEB 500 or HEM 600} \\ \dfrac{S_i}{\eta_{Rot}} & \text{– Unrestrained flanges and section greater than HE 400, HEB 500, HEM 600 or IPE sections} \end{cases} \tag{10}$$

where η is a function of β (table 1) and $\eta_{Rot} = 2/3\,\eta$. Fig. 7 shows an example of application of eq. (10) to the curves resulting from numerical simulations for $\beta = 0{,}5$ and $\alpha = 0{,}2$.

β	η
≤ 0,25	2
0,5	3
0,75	5

Table 1 - Values of η function of β

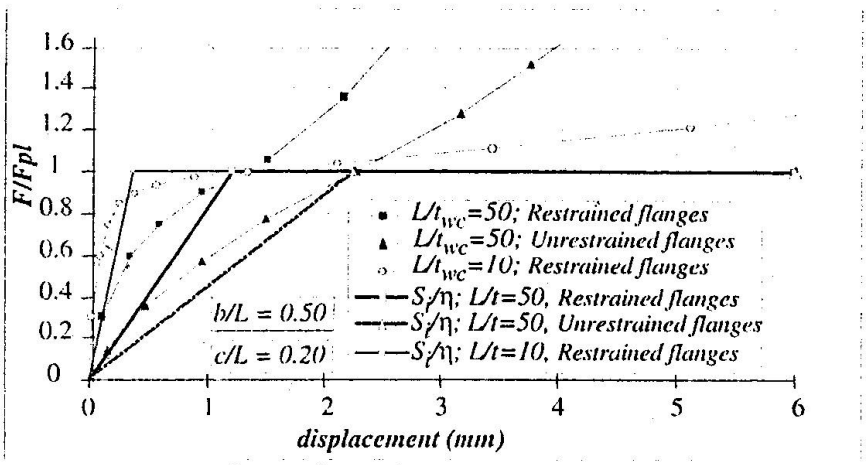

Fig. 7- Curves $F/F_{pl} - \delta$ for $\beta = 0{,}5$ and $\alpha = 0{,}2$

5. Post-plastic behaviour

The column web in a minor-axis joint is a plate loaded by the forces equivalent to the applied bending moment. According to Massonnet [7], there are theoretical results available to predict second order behaviour of certain strips and circular plates, characterised by a parabolic curve followed by a linear function. From some experimental studies [7] it may be concluded that force-displacement curves for bigger span / thickness ratios (where second order effects are more important) are steeper than those corresponding to smaller values of that ratio. However, if those curves are non-dimensionalized with respect to the plastic force and to the plate's thickness (i.e. transformed in curves $F/F_{pl} - \delta/t$) curves are approximately parallel in their straight parts. We could verify from our numerical simulations that those results apply to a column web in a minor-axis joint, and that the displacement corresponding to the transition between the parabolic curve and the straight line is approximately the thickness of the column web. These facts led us to propose [10] a model to characterise the post-yielding behaviour of the column web, which is important to evaluate its overstrenght, that could lead to brittle failure of non-ductile components (bolts or welds). This model is showed in Fig. 8, and the two straight lines are fully characterised by two parameters: f_2 or non-dimensional membrane stiffness $\left(S_{m,a\,\dim}\right)$ and f_1 or intersection with F/F_{pl} axis of the straight part or $F/F_{pl} - \delta/t$ curve;

$$\frac{F}{F_{pl}} = \begin{cases} 0{,}9 + \left(f_1 + f_2 - 0{,}9\right)\left(\dfrac{\delta}{t}\right) & \text{if } \dfrac{\delta}{t} \le 1 \text{ and } \dfrac{F}{F_{pl}} \ge 1 \\ f_1 + f_2\left(\dfrac{\delta}{t}\right) & \text{if } \dfrac{\delta}{t} \ge 1 \text{ and } \dfrac{F}{F_{pl}} \ge 1 \end{cases} \tag{11}$$

From our parametric study we could propose for f_1 and f_2:

$$f_1 = -0{,}24\beta - 0{,}012\mu + 0{,}72 \quad (12) \qquad f_2 = 0{,}55 + 1{,}07\alpha + 0{,}85 \quad (13)$$

which have showed to lead to a safe estimate for the post-plastic limit of the column web.

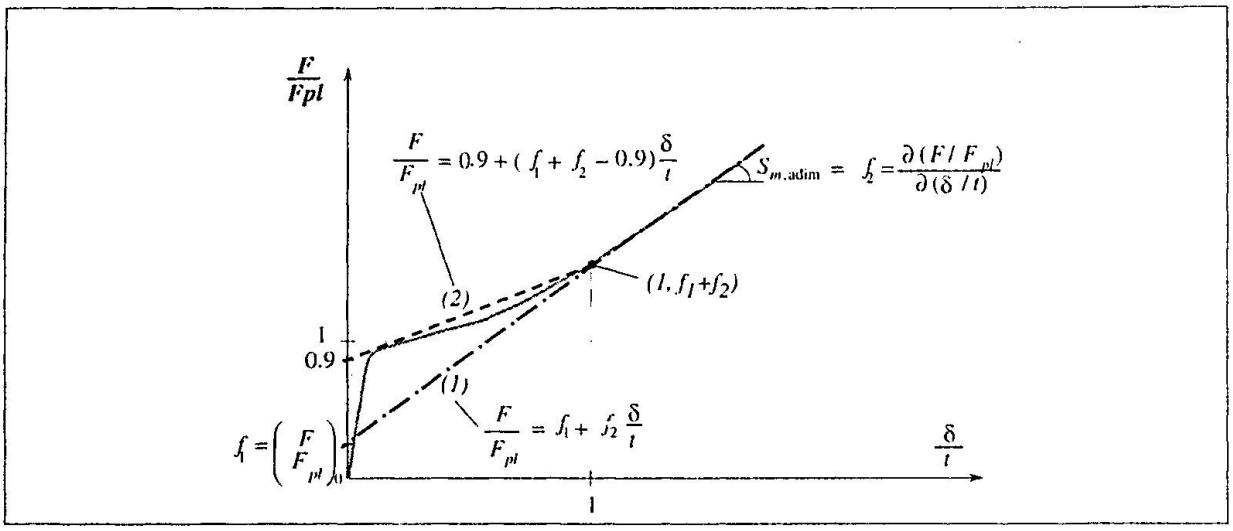

Fig. 8 - Bi-linear approximation of column web post-limit behaviour

6. Conclusions

A parametric study conducted using the finite-element method led to the identification of the major parameters influencing the behaviour of the column web in a minor-axis joint.

The elastic (or initial stiffness) may be evaluated by simple formulae that are based on a physical model - strip plate, and corrected by the numerical simulations results. The presented proposal leads to a good estimation of the observed numerical results and constitutes a considerable improvement to previous models.

Secant stiffness may be computed by dividing initial stiffness from a η coefficient that has been obtained from the numerical simulations.

Finally, post-yielding behaviour may be approximated by a bi-linear model based on two parameters - membrane stiffness, and intersection with F/F_{pl} axis of the straight line that characterises post-yielding behaviour for large deflections. A proposal for those parameters based on numerical simulations has been made, and leads to a safe estimation of column web overstrenght.

7. References

[1] CZECHOWSKI, A., KORDJAK, J., BRÓDKA, J., Flexibility Formulae and Modelling of Joint Behaviour in Girders made of Rectangular Hollow Sections. *Proceedings of a state-of-the-art workshop on Connections and the Behaviour, Strength and Design of Steel Structures held at the ENS, Cachan, May 1987*, Elsevier Applied Science, London, 1987, pp 175-182.

[2] EUROCODE N° 3 - Design of Steel Structures. Part 1.1: General Rules and Rules for Buildings - European Prestandard ENV 1993-1-1, Commission of the European Communities, Brussels, 1992.

[3] GOMES, F.C.T., Etat Limite Ultime de la Résistance de L'âme d'une Colonne dans un Assemblage Semi-Rigide d'axe Faible, Rapport Interne n° 203, MSM - Université de Liège, Août 1990.

[4] GOMES, F.C.T., JASPART, J.-P., Experimental research of minor-axis joints. Comparison with theoretical predictions, COST C1 WG2 Meeting, Coimbra, Nov. 1994. Doc. COST C1/WD2/94-13.

[5] GOMES, F.C.T., JASPART, J.P., MAQUOI, R., Behaviour of Minor Axis Joints and 3-D Joints, *Proceedings of the second state-of-the-art workshop on Semi-Rigid Behaviour of Civil Engineering Structural Connections, Prague, Out. 1994.*

[6] GOMES, F.C.T., Moment capacity of beam-to-column minor-axis joints, *Proceedings of the IABSE International Colloquium on Semi-Rigid Structural Connections, Turkey, Sept. 1996.*

[7] MASSONET, SAVE, Calcul Plastique des Constructions - vol II Structures Dépendant de Plusieurs Paramètres, ASBL, Bruxelles, 1972.

[8] NEVES, L.F.C., GOMES, F.C.T., Parametric study on the behaviour of minor-axis joints, COST C1 WG2 Meeting, Coimbra, Nov. 1994. Doc. COST C1/WD2/94-?.

[9] NEVES, L.F.C., GOMES, F.C.T., Numerical simulation of a column web in a minor-axis joint, COST C1 WG6 Meeting, Trento-Italy, July 1995. Doc. COST C1/WG6/95-?.

[10] NEVES, L.F.C., Nós semi-rígidos em estruturas metálicas. Avaliação da rigidez em configurações de eixo fraco (in portuguese), Thesis submitted in partial fulfillment of the requirements for the degree of Master of Structures, Coimbra, 1996