Zeitschrift: IABSE reports = Rapports AIPC = IVBH Berichte

Band: 75 (1996)

Artikel: A consistent formulation of the yield-hinge theory for 3-D frames considering the deformations of connections

Autor: Gebbeken, Norbert

DOI: https://doi.org/10.5169/seals-56902

Nutzungsbedingungen

Die ETH-Bibliothek ist die Anbieterin der digitalisierten Zeitschriften auf E-Periodica. Sie besitzt keine Urheberrechte an den Zeitschriften und ist nicht verantwortlich für deren Inhalte. Die Rechte liegen in der Regel bei den Herausgebern beziehungsweise den externen Rechteinhabern. Das Veröffentlichen von Bildern in Print- und Online-Publikationen sowie auf Social Media-Kanälen oder Webseiten ist nur mit vorheriger Genehmigung der Rechteinhaber erlaubt. Mehr erfahren

Conditions d'utilisation

L'ETH Library est le fournisseur des revues numérisées. Elle ne détient aucun droit d'auteur sur les revues et n'est pas responsable de leur contenu. En règle générale, les droits sont détenus par les éditeurs ou les détenteurs de droits externes. La reproduction d'images dans des publications imprimées ou en ligne ainsi que sur des canaux de médias sociaux ou des sites web n'est autorisée qu'avec l'accord préalable des détenteurs des droits. En savoir plus

Terms of use

The ETH Library is the provider of the digitised journals. It does not own any copyrights to the journals and is not responsible for their content. The rights usually lie with the publishers or the external rights holders. Publishing images in print and online publications, as well as on social media channels or websites, is only permitted with the prior consent of the rights holders. Find out more

Download PDF: 07.07.2025

ETH-Bibliothek Zürich, E-Periodica, https://www.e-periodica.ch

A Consistent Formulation of the Yield-Hinge Theory for 3-D Frames Considering the Deformations of Connections

Dr. Norbert Gebbeken
Engineering Mechanics
& Structural Mechanics
University of the Federal
Armed Forces Munich
85577 Neubiberg
Germany

Professor (chair of EM&SM),
civil engineer,
M.Sc., PhD and Habilitation
from Hannover University,

Summary

As far as steel-rod structures are concerned the yield-hinge theory is a very efficient approach of the ultimate-load theory. The deformability of semi-rigid connections significantly affects the load-carrying behaviour and as a consequence the elasto-plastic failure. In the present paper a formulation of a generalized yield-hinge theory in combination with the consideration of the deformations of connections is consistently developed from the theory of plasticity. The numerical example shows the efficiency of the proposed method.

1 Introduction

The harmonization of the national and international standards will affect the design of steel structures in the future. Due to the reasons of safety and economy it is advised to apply methods which allow to consider the nonlinear geometrical effects as well as the nonlinear material behaviour. As far as frames are concerned the *yield-hinge theory* is widely accepted. Earlier proposed methods, e.g. GREENBERG & PRAGER ([5]), were restricted to the geometrical nonlinear theory of second order (*theory of 2nd order*) or by considering just $P-\delta$-effects ($P-\delta$-*method*). Moreover, the plastic behaviour was only considered in regard to the bending moment. A few authors took the *interaction* of the internal forces in the plastic regime into account. Thus, yielding an inconsistent theory as shown in [3]. In order to derive an advanced numerical procedure for the yield-hinge theory the above-mentioned simplifications are not necessary.

Yield-hinge theory methods can be subdivided into two main branches: *concentric-yield hinge theory* and *eccentric-yield hinge theory* (*generalized yield-hinge theory*). The main advantage of any yield-hinge approximation is based on its economical application from

the computational point of view and on its vivid derivation (GEBBEKEN [3]). Studies have shown that the *yield-hinge theory* represents the *load-carrying behaviour* of frames sufficiently for a wide range of applications.

In this paper both, the theory and its numerical treatment in context of the finite element method are presented in order to determine the nonlinear elasto-plastic load-carrying behaviour and the ultimate load of frames. In addition, this contribution focusses on developing a practice related method.

2 Fundamentals of the yield-hinge theory

The assumptions of the yield-hinge theory of beams are almost identical to the assumptions of the classical rod-theory (LUMPE [6]). The frames comprise of more or less slender, prismatic and straight steel members with *rigid or semi-rigid structural connections* at the joints. In the three-dimensional case the numerical node has six degrees of freedom which are the *nodal displacements* and the *nodal rotations* associated to the six *nodal forces*. *Yield-hinge models* are introduced for the purpose of representing the actual plastic deformations as well as the actual ultimate load-carrying capacity of beam members.

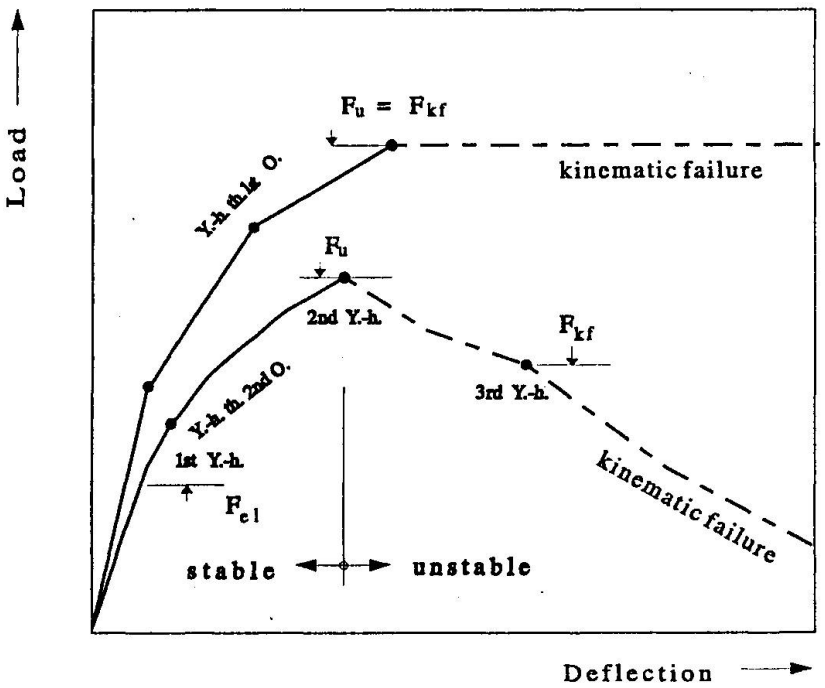

Figure 1: Comparison of load-deflection curves

The *limit points* (Fig. 1) of the yield-hinge theory can be defined with the help of the following four **limit-load conditions**:

1. *equilibrium exists,*
2. *the yield-condition of a cross-section is not violated,*
3. *the virtual work on the path of plastic deformations is not negative,*
4. *the kinematic mechanism (failure mode) of the system is attained.*

The first three conditions define the *ultimate-load* (F_u) while all four conditions define the *kinematic-failure load* (F_{kf}). The *ultimate-load* (F_u) is the maximum-load which a structure can be subjected to. The ultimate-load might be detected as buckling-load due to elasto-plastic loss of stability. The *kinematic-failure load* (F_{kf}) is associated to the plastic failure of the structure going along with the forming of a mechanism. Applying the yield-hinge theory of first order (geometrical linear theory) the values of F_{kf} and F_u are identical. Applying a geometrical nonlinear theory $F_{kf} \leq F_u$ holds. The consideration of the geometrical nonlinearity is a requirement to carry out stability analyses. It is a necessary condition that the virtual work of the plasticized cross-sections is not negative. This is guaranteed if *incremental procedures* and the generalized hield-hinge concept are applied. The *interaction of the internal forces* in plasticized cross-sections is described by *interaction-functions* f (*yield-functions*) which are based on the *J_2-flow theory.*

3 Mathematical formulation of the yield-surface

We postulate a function

$$f = f(F_i, k) \begin{cases} > 0 & \text{hardening} \\ = 0 & \text{yield-condition (elastic limit)} \\ < 0 & \text{elastic regime} \end{cases} \tag{1}$$

where F_i are the (ultimate) internal forces and k is a parameter that comes from the yield-criterion. The function f defines the *limit-state of elasticity* under any possible combinations of *ultimate stress-resultant components (ultimate internal forces).* For this, the *yield-criterion* of HUBER, V. MISES & HENCKY (*J_2-flow theory*) is best suited to simulate the elastic limit of steel. The equation $f = 0$ defines the transition (elastic limit or beginning of plastification) between the elastic ($f < 0$) and the plastic ($f \geq 0$) regime. The inequation $f > 0$ represents hardening of the material which is not considered here. In the framework of the limit-load theory of frames, the yield-function is often called "interaction-function".

The problem of formulating interaction-functions has been tackled by many scientists in the last three decades. A large number of different interaction-functions have been proposed in the literature. A survey and a comparison have been published in [1].

RUBIN derived in [8] *interaction-functions* which represent the *yield-surface (yield-locus)* of open rectangular cross-sections and double-T cross-sections. The derivations are carried out under consideration of all internal forces, except of the torsional moment. Thus, yielding an exact representation of the yield-surface in the case of plane bending, and a fairly

good approximation of the three-dimensional case. The influence of the torsional component can be approximately considered by adding the value of the stress due to torsion to the shear-stress. As far as it is known from the literature, only the interaction-functions of RUBIN are strictly derived from admissible ultimate stress states of full plasticized cross-sections. So, they can be seen as the most accurate ones.

For practical purposes simplified emprical interaction-functions on different approximation levels have been proposed. *Empirical interaction-relations* are not necessarily derived from the integration of stress-states. Their mathematical structure is often very simple. These formulae serve to approach the true *ultimate-load capacity* of a cross-section which is represented by the *yield-surface*.

In order to fulfill the condition of convexity of the yield-surface (DRUCKER's *postulation*) a *lower bound of the yield-surface* is defined by

$$f = \left|\frac{M_y}{M_y^p}\right| + \left|\frac{M_z}{M_z^p}\right| + \left|\frac{N}{N^p}\right| - 1 = 0 \quad . \tag{2}$$

Eq. 2 represents a plane in the three-dimensional space of M_y, M_z, N. The influence of the shear-forces is here considered according to RUBIN. Eq. 2 is the most simple yield-function. The influence of the torsional component can be approximately considered by adding an extra term $(M_x/M_x^p)^2)$ to the left-hand side of the yield-function. For more information about interaction formulae see [1].

4 On the yield-hinge concepts

4.1 Concentric yield-hinges

The most simple possibility to represent plastic load-carrying behaviour is the introduction of *concentric yield-hinges*. In textbooks we can find applications to pure bending or pure membrane or pure shear, repectively. Thus, concentric yield-hinges associated with bending moment or normal-force or shear-force are introduced. The symbols for these concentric yield-hinges are given in Fig. 2.

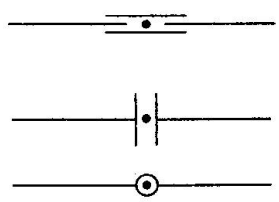

Figure 2: Symbols for concentric yield-hinges: 1st) normal-force, 2nd) shear-force, 3rd) bending moment

For frame analysis it is widely accepted to apply concentric yield-hinges associated with the bending moment. This is the *classical strategy*. For the analysis of *truss-structures* it

is obvious to apply concentric yield-hinges with respect to the normal-force (*normal-force yield-hinge*). For details see [1], [7].

The implementation of concentric yield-hinges into a computer program can easily be achieved by the technique of *static condensation* with respect to the nodal displacement component. Thus, yielding a plastic stiffness matrix for the beam and an additional nodal vector on the right-hand side which includes the plastic nodal forces. Within this procedure, the *yield-condition* can be considered with the help of an inner iterative loop. *It is worth-mentioning that, in any case, these concentric yield-hinges are located in the centerline of the beam and not in the neutral axis.*

4.2 Eccentric yield-hinges

GIRKMANN already pointed out in 1932 ([4]) that the position of a yield-hinge moves in thickness direction of a cross-section and that the position coincides with the location of the neutral axis. In the following we will derive a closed and theoretical consistent formulation for *two-dimensional and three-dimensional frames.* The kinematic relations are drawn in Fig. 3 for the two-dimensional case and in Fig. 4 for the three-dimensional case.

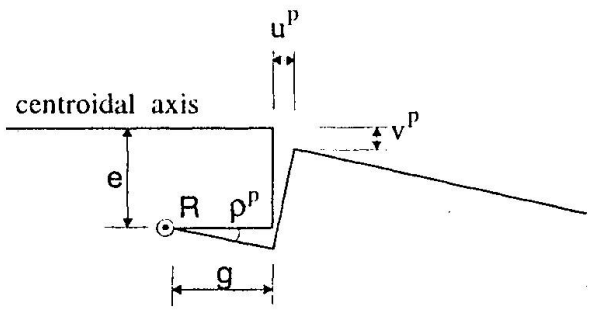

Figure 3: Generalized (eccentric) yield-hinge (two-dimensional)

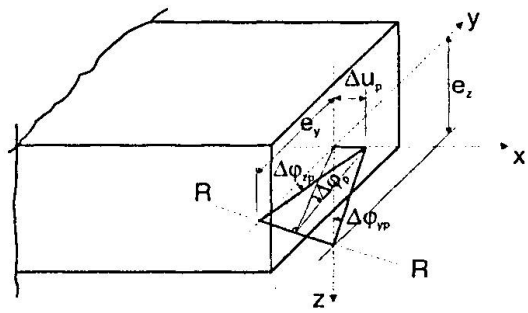

Figure 4: Generalized (eccentric) yield-hinge (three-dimensional)

The formulation for yield-hinges is carried out in the framework of a geometrical nonlinear formulation. Because of the incremental, iterative procedure the relations are linearized for each iterative step. Consequently, we can start with the linear relation between the *nodal force vector* and the *nodal displacement vector* in the elastic regime

$$F = k\,v^e\,. \tag{3}$$

In order to consider the plastification at the end nodes i and j of a rod it makes sense to write Eq. 3 explicitely with respect to both end nodes:

$$F = \begin{bmatrix} F_i \\ F_j \end{bmatrix}^{12} = \begin{bmatrix} k_{ii} & k_{ij} \\ k_{ji} & k_{jj} \end{bmatrix}^{12} \begin{bmatrix} v_i^e \\ v_j^e \end{bmatrix}^{12} \tag{4}$$

For elasto-plastic analysis we have to add the plastic deformation as well as the deformation of the connections, or vice versa, the total incremental displacement vector Δv can be decomposed additively into an elastic part Δv^e, a plastic part Δv^p, and a part Δv^d due to the deformability of semi-rigid connections,

$$\Delta v = \Delta v^e + \Delta v^p + \Delta v^d \quad , \tag{5}$$

$$\Delta v = \begin{bmatrix} \Delta v_i \\ \Delta v_j \end{bmatrix}^{12} = \begin{bmatrix} \Delta v_i^e \\ \Delta v_j^e \end{bmatrix}^{12} + \begin{bmatrix} \Delta v_i^p \\ \Delta v_j^p \end{bmatrix}^{12} + \begin{bmatrix} \Delta v_i^d \\ \Delta v_j^d \end{bmatrix}^{12} \quad , \tag{6}$$

repectively. Applying an incremental procedure the following holds for each increment:

$$f + \Delta f = f(F_i, k) + \Delta f(\Delta F_i, k) = 0 \, . \tag{7}$$

Provided that the yield-condition $f = 0$ (1) holds, it is a result of (7) that the incremental part of the yield-condition has to be fulfilled by the increment of the nodal force vector. Assuming an ideal plastic material behaviour it is evident that the incremental part of the nodal force vector is part of the yield-surface $f = 0$. Rearranging and inserting (6) into (4) we obtain

$$\Delta F = \begin{bmatrix} \Delta F_i \\ \Delta F_j \end{bmatrix}^{12} = \begin{bmatrix} k_{ii} & k_{ij} \\ k_{ji} & k_{jj} \end{bmatrix}^{12} \begin{bmatrix} \Delta v_i^e \\ \Delta v_j^e \end{bmatrix}^{12} = \begin{bmatrix} k_{ii} & k_{ij} \\ k_{ji} & k_{jj} \end{bmatrix}^{12} \begin{bmatrix} \Delta v_i - \Delta v_i^p - \Delta v_i^d \\ \Delta v_j - \Delta v_j^p - \Delta v_j^d \end{bmatrix}^{12} . \tag{8}$$

Since we have introduced the plastic deformation vector and the deformation vector of the connections explicitely, we need a rule how to determine them. For the **plastic deformation**, we apply the well established *flow-rule* of PRANDTL and REUSS:

$$\Delta v^p = \lambda^p \frac{\partial f}{\partial F_i} = \lambda^p \nabla f \quad , \quad \lambda^p \geq 0 \tag{9}$$

or written with respect to each node

$$\Delta v_i^p = \lambda_i^p \nabla f_i \quad , \tag{10}$$

$$\Delta v_j^p = \lambda_j^p \nabla f_j \quad , \tag{11}$$

respectively, where λ_i^p and λ_j^p are proportional constants (*plastic multiplier*). For this, it is assumed that the yield-function f is a potential.

Annotation: *This is the decisive extension to the concentric yield-hinge concept. With the flow-rule (9) the material formulation is complete and consistent to the theory of plasticity.*

For the **deformation of the connections**, we apply the moment-rotation relations expressed by

$$\Delta v^d = \lambda^d M \tag{12}$$

or written with respect to each node

$$\Delta v_i^d = \lambda_i^d M \quad , \tag{13}$$
$$\Delta v_j^d = \lambda_j^d M \quad , \tag{14}$$

respectively, where λ_i^d and λ_j^d are the secant stiffnesses of the moment-rotation graphs. They can be produced by experimental investigations or by numerical analyses as shown in GEBBEKEN et al. [2].

Finally we arrive at

$$F = \begin{bmatrix} F_i \\ F_j \end{bmatrix}^{12} = \begin{bmatrix} k_{ii}^{pd} & k_{ij}^{pd} \\ k_{ji}^{pd} & k_{jj}^{pd} \end{bmatrix}^{12} \begin{bmatrix} v_i \\ v_j \end{bmatrix}^{12} \quad , \tag{15}$$

where $[k^{pd}]$ is the *element stiffness matrix* for an elasto-plastic rod element with semi-rigid connections.

5 Numerical Example

Two storey four bay plane frame

The frame chosen for analysis is shown in Fig. 5. This structure has been firstly investigated by STUTZKI in [9]. It is assumed that all girders are semi-rigidly connected to the columns.

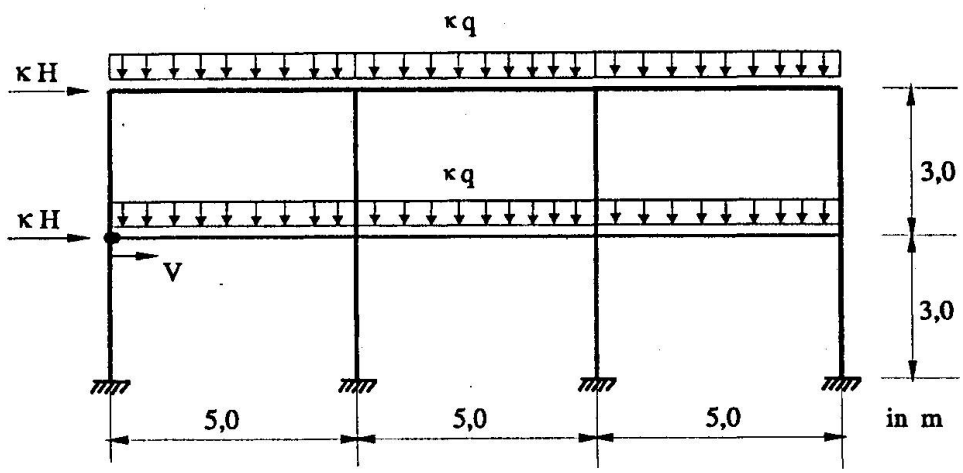

q = 60.0 kN/m Beams: HEB 300
H = 31.0 kN Columns: HEA 220
Material: Fe 360 B (St 37-2)

Figure 5: 2-D Frame: Geometrical data, yield-stress and loading

In order to illustrate the influence of the deformation of connections on the nonlinear effects, STUTZKI used different types of models for the joints. All of them are truss-like models which are vivid but costly with respect to elementation. The stiffness of a truss member serves to simulate the moment-rotation behaviour of the connection under consideration. For the author's calculation, generalized yield-hinges have been used. The numerical models of the connections are now element-inherent, quasi a makro model. Thus, the structural analyst can element the structure as usual. He only needs to define the moment-rotation behaviour of the semi-rigid connection as shown in Fig. 6. In addition, the yield-function (2) and the interaction formulae according to RUBIN are utilized. In order to compare the results, the computations have been carried out for rigid connections as well as for semi-rigid connections with the characteristics shown in Fig. 6.

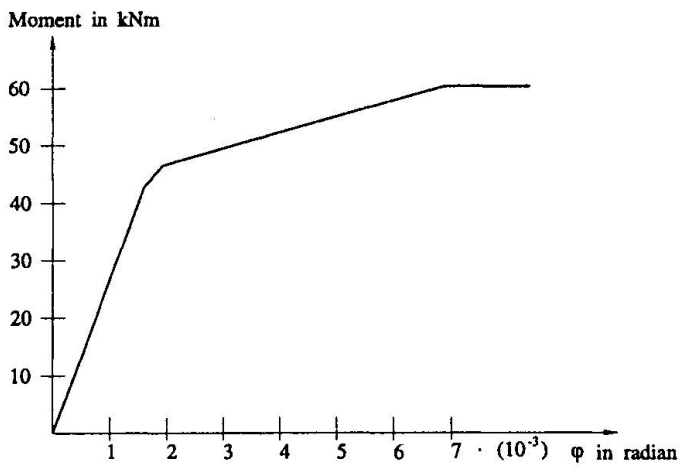

Figure 6: 2-D Frame: Moment vs. rotation graph

The load vs. deflection curves are plotted in Fig. 7 with respect to the horizontal deflection v as shown in Fig. 7. It is obvious that the stiffer the connections the stiffer the load vs. deflection characteristic. Thus, the three upper graphs represent the behaviour of the frame with rigid connections. The solid line has been taken over from STUTZKI whereas the broken lines are the results of the author's calculation. Their deviations are due to the application of different interaction functions. Applying the linear interaction formula the ultimate load is underestimated, while using RUBIN'S formulae the ultimate carrying capacity of cross-sections is quite well approximated.

The studies result in a load factor of $\kappa \approx 2.0$ and in a horizontal deflection of the first girder of $\kappa \approx 3.0\,cm$. Slender columns, large column compressive axial loads and the influence of the geometrical nonlinearity resulted in a significant reduction of the magnitude of the ultimate load factor (from $\kappa \approx 2.0$ to $\kappa \approx 1.6$) when compared to the analysis with rigid connections. Only 80% of the first-order ultimate load was attained. Besides the nonlinear moment-rotation behaviour of the connections the members partly suffer plastifications.

The results show clearly that the frame studied here is a member of the so-called "*second order frame*" family. Due to the influence of the deformations on the equilibrium formu-

lation, these frames usually failed by elasto-plastic instability prior to the formation of a plastic mechanism.

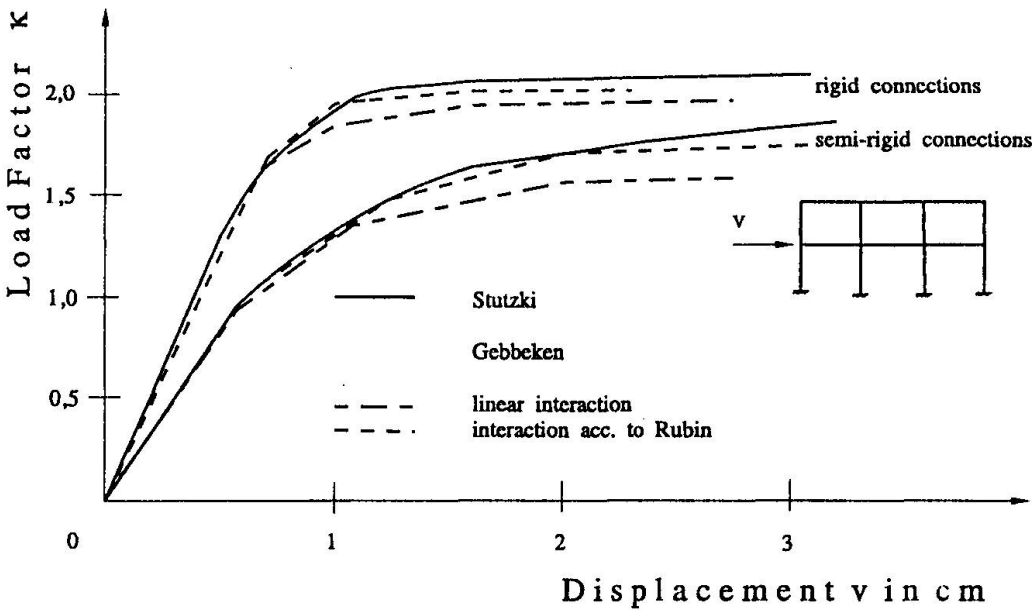

Figure 7: 2-D Frame: Load vs. deflection curves

According to the German standard DIN 18800 we have to consider safety factors in order to design the frame. The safety factor for the loads is $\gamma_F = 1.5$ and the safety factor for the material is $\gamma_M = 1.1$. Thus, we can predict a design load factor of $\kappa_D = 1.06$. The frame with semi-rigid connections has a total weight of $W = 47.22\,kN$. The elastic limit-load has been reached at $\kappa_D = 0.9$. Consequently, we need HEB 220 profiles for the columns which results in a total weight of $W = 52.26\,kN$. Assuming that the members are rigidly connected to each other HEB 280 profiles are sufficient for the girders. In this case a total weight of $W = 43.02\,kN$ has been calculated. This comparison reveals that on the one hand it is economical to apply nonlinear methods, on the other hand it is a demand to apply nonlinear methods in order to guarantee safety.

Annotations:

The magnitude of the ultimate-load depends significantly on the deformability of the connections as well as on the used interaction-function. If the structure turns to be weak due to geometrical nonlinear effects as well as due to plastification, the calculation is very sensitive with respect to the deformations. The method is robust regarding the ultimate loads.

References

[1] Gebbeken, N.: *Eine Fließgelenktheorie höherer Ordnung für räumliche Stabwerke - Zugleich ein Beitrag zur historischen Entwicklung,* Mitt. Nr. 32-88, Inst. für Statik, Universität Hannover, 1988 and Stahlbau 57 (1988) 365-372

[2] Gebbeken, N.; Rothert, H.; Binder, B.: *On the Numerical Analysis of Endplate Connections.* Journal of Constructional Steel Research, 30 (1994) 177-196

[3] Gebbeken, N.: *A Refined Numerical Approach for the Ultimate-Load Analysis of 3-D Steel Rod Structures,* submitted to Engineering Computations, (1996)

[4] Girkmann, K.: *Über die Auswirkung der "Selbsthilfe" des Baustahls in rahmenartigen Stabwerken.* Der Stahlbau 5 (1932) 121-127

[5] Greenberg, H.J.; Prager, W.: *On the limit design of beams and frames.* Proc. ASCE 77 No. 59 (1951)

[6] Lumpe, G.: *Geometrisch nichtlineare Berechnung von räumlichen Stabwerken,* Mitt. Nr. 28, Institut für Statik, Universität Hannover, 1982

[7] Rothert, H.; Gebbeken, N.: *On Numerical Results of Reticulated Shell Buckling.* Int. J. of Space Structures 7, No. 4 (1992) 299-319

[8] Rubin, H.: *Interaktionsbeziehungen für doppelsymmetrische I- und Kastenquerschnitte bei zweiachsiger Biegung und Normalkraft.* Der Stahlbau (1978) 145-151, 174-181

[9] Stutzki, C.: *Traglastberechnung räumlicher Stabwerke unter Berücksichtigung verformbarer Anschlüsse.* Institut für Stahlbau, RWTH Aachen (1982)