Zeitschrift: IABSE reports = Rapports AIPC = IVBH Berichte
Band: 74 (1996)

Artikel: Examples of the application of Eurocode 1
Autor: Orr, Trevor L.L. / O'Brien, Eugene J.
DOI: https://doi.org/10.5169/seals-56106

Nutzungsbedingungen
Die ETH-Bibliothek ist die Anbieterin der digitalisierten Zeitschriften auf E-Periodica. Sie besitzt keine Urheberrechte an den Zeitschriften und ist nicht verantwortlich für deren Inhalte. Die Rechte liegen in der Regel bei den Herausgebern beziehungsweise den externen Rechteinhabern. Das Veröffentlichen von Bildern in Print- und Online-Publikationen sowie auf Social Media-Kanälen oder Webseiten ist nur mit vorheriger Genehmigung der Rechteinhaber erlaubt. Mehr erfahren

Conditions d'utilisation
L'ETH Library est le fournisseur des revues numérisées. Elle ne détient aucun droit d'auteur sur les revues et n'est pas responsable de leur contenu. En règle générale, les droits sont détenus par les éditeurs ou les détenteurs de droits externes. La reproduction d'images dans des publications imprimées ou en ligne ainsi que sur des canaux de médias sociaux ou des sites web n'est autorisée qu'avec l'accord préalable des détenteurs des droits. En savoir plus

Terms of use
The ETH Library is the provider of the digitised journals. It does not own any copyrights to the journals and is not responsible for their content. The rights usually lie with the publishers or the external rights holders. Publishing images in print and online publications, as well as on social media channels or websites, is only permitted with the prior consent of the rights holders. Find out more

Download PDF: 16.10.2025

ETH-Bibliothek Zürich, E-Periodica, https://www.e-periodica.ch

Examples of the Application of Eurocode 1

Trevor L.L. ORR
Eugene J. O'BRIEN
Lecturers
Department of Civil, Structural & Environmental Engineering
Trinity College
University of Dublin
Ireland

Trevor Orr obtained his civil engineering degree from Trinity College, Dublin in 1971 and his Ph.D. from Cambridge University. He worked for an engineering consultancy in London before moving to Trinity College in 1977. His particular interest is geotechnical engineering. From 1979 - 1993 he was a member of the drafting panel and project team that produced Eurocode 7, Part 1 - Geotechnical Design.

Eugene O'Brien obtained his civil engineering degree from University College Galway in 1980 and his Ph.D. from the University of Calgary. He worked as a consulting structural engineer before moving to Trinity College in 1990. He is author of the book *Reinforced and Prestressed Concrete Design* which uses Eurocodes 1 and 2 as the basis for design. His particular interest is bridge loading.

Summary

This paper presents a series of trial calculations to illustrate the authors' interpretation of the requirements in Eurocode 1 for calculating the design loadings on structures and the load combinations to give the worst effects. The results of these calculations are compared with current design practice in Ireland and it is found that adoption of the factors given in Eurocode 1 will lead to different design loads for buildings. These differences include greater variable roof loading for both unlimited and restricted access, increased and more uniform loading intensities and higher wind pressures on walls while, in the design of foundations, the introduction of EC1 with Cases B and C will result in the need, certainly initially, to check both Cases B and C.

1. Introduction

The purpose of this paper is to investigate, by means of a number of examples (some based on sample problems by O'Brien & Dixon (1995)), the requirements of Eurocode 1 (EC1) for calculating the design loads on structures and the design of foundations. The examples form the basis for a comparison of the requirements of EC1 with those of the British standards which are currently used in Ireland to calculate the loadings on buildings and to design foundations.

2.4.4 Eccentrically Loaded Square Pad Foundation

The third foundation example is an eccentrically loaded square pad foundation with a 300 mm square column which provides a central vertical load of 300 kN and a horizontal load of 75 kN at a height of 4 m above the base of the foundation. The foundation widths and M_{max} values obtained for this foundation are given in Table 1. These results show that, for this eccentrically loaded foundation, both the size and the strength are governed by Case B.

2.4.5 Discussion

The calculated maximum widths and bending moments for the above foundation examples show that, using the factors given in Table 9.2 of EC1 - Part 1, it cannot be assumed in designs involving the strength of the ground and structural materials that Case B will always govern the strength of the member and Case C will always govern the size of the member. These examples have shown that the cases which control the size and strength of a foundation depend on the geometry of the problem and the nature of the loading. Until there has been more experience with the use of these cases to discover which is the relevant case in any design situation, it will be necessary, as required by EC1, to check that designs satisfy both cases.

3. Conclusions

The results of these examples show that, when compared with traditional practice in Ireland, adoption of the factors given in Eurocode 1 will lead to different design loads for buildings. These differences will include greater variable roof loading for both unlimited and restricted access, increased and more uniform loading intensities and higher wind pressures on walls. In the design of foundations, the introduction of EC1 with Cases B and C will result in the need, certainly initially, to check both Cases B and C.

References

BS6399: Part 2 (1995) Loading for buildings, Part 2: Code of practice for wind loads, British Standards Institution.

BS6399: Part 3 (1988) Loading for buildings, Part 3: Code of practice for imposed roof loads, British Standards Institution.

CP3 Chapter V (1972) Code of basic data for the design of buildings, Chapter V: Loading, Part 2: Wind loads, British Standards Institution.

ENV 1991-1 (1994) Eurocode 1: Basis of design and actions on structures - Part 1: Basis of design, CEN (European Committee for Standardization), Brussels.

ENV 1991-1 (1993) Eurocode 1: Basis of design and actions on structures, Part 2.1: Densities, self-weight, imposed loads, snow loads and wind, CEN, Brussels.

ENV 1991-2.3 (1993) Eurocode 1: Basis of design and actions on structures, Part 2.3: Wind actions, CEN, Brussels.

ENV 1997-1 (1994) Eurocode 7: Geotechnical design - Part 1: General rules, CEN (European Committee for Standardization), Brussels.

O'Brien E.J. & Dixon A.S. (1995) Reinforced and prestressed concrete design: The Complete Process, Longman.

Orr T.L.L (1993) Partial factors in geotechnical design, Transactions of the Institution of Engineers of Ireland, 1992-93, Dublin, 117, 545-558.

2.4.2 Centrally Loaded Square Pad Foundation

A square pad foundation supports a 200 mm square column which provides a central vertical load of 300 kN. The calculated foundation widths for Cases B and C, without any rounding-up as would normally occur in practice, are 0.83 m and 0.97 m respectively, as shown in Table 1. Thus the maximum foundation width of 0.97 m is obtained for Case C. Using this larger width, the maximum bending moments in the foundation at the face of the column, M_{max} for Cases B and C are 31.9 kNm/m and 23.6 kNm/m respectively, as shown in Table 1, and so the M_{max} value is obtained for Case B. Thus, for the ultimate limit state, the size of this foundation is governed by Case C and the strength by Case B. If the column is increased to 400 mm, then the M_{max} value occurs for Case C, rather than for Case B, as shown by the values in Table 1. For zero column width, i.e. for a concentrated load, M_{max} in kNm/m is independent of the foundation width chosen, whether the Case B or C widths, being equal to the Case B design load divided by 8.

	Square Pad Foundation V = 300 kN				Strip Foundation V = 400 kN/m		Square Pad Foundation V = 300 kN H = 75kN at h = 4m	
	Case B		Case C		Case B	Case C	Case B	Case C
Foundation width, b (m)	(0.83)		**0.97**		(1.04)	**1.36**	**3.72**	(3.59)
Design width (m)	0.97		0.97		1.36	1.36	3.72	3.72
Column/wall width (mm)	200	400	200	400	300	300	300	300
M_{max} (kNm/m)	**31.9**	11.6	23.6	**12.9**	**55.7**	41.3	**63.6**	44.9

Table 1: Calculated widths and bending moments for the foundation examples

Foundation settlements have not been considered in the above calculations. The traditional method for ensuring that foundation settlements are not excessive has been to use a global factor of safety of 3 and unfactored loads which, for this example, yields a foundation width of 1.16 m. This is greater than the design value of 0.97m obtained above using the factors in Table 9.2 of EC1 - Part 1 for the ultimate limit state. The M_{max} value for structural design of the foundation is determined using this width and a linear bearing pressure to balance the factored loads for the ultimate limit state. This approach yields an M_{max} value of 36.0 kNm/m which again is greater than the design value obtained above. Thus, if the ultimate limit state is the design criterion, this example indicates that using EC1 will result in foundations that are smaller and weaker than those obtained by the traditional methods. For comparison, in the design of embedded retaining walls using the factors in EC1, a number of investigators, e.g. Orr (1993), have found that these factors result in retaining walls that are smaller but stronger than those obtained by the current design methods.

2.4.3 Centrally Loaded Strip Foundation

The second foundation example is a long strip foundation which supports a 300 mm thick wall providing a central vertical load of 400 kN/m. The result of the calculations for this example are also given in Table 1 and show that, for this foundation, the maximum foundation width (1.36 m) is obtained for Case C and the M_{max} value (41.0 kNm/m) is obtained for Case B. Thus, for this example, as for the centrally loaded square foundation with the 200 mm column, the size is governed by Case C and the strength by Case B.

be multiplied by a factor of 0.85 to allow for non-simultaneous action between building faces and by a dynamic augmentation factor of 1.02. Hence the total building force is:

$$0.85(1.02)(0.726)(0.76 + 0.26)(0.82)(35x9) \quad = \quad 166 \text{ kN}$$

which is a force 5% in excess of that found using EC1. The internal wind pressure is found from the product of the dynamic wind pressure, 0.726 kN/m^2, an internal pressure coefficient of -0.3 and a size effect factor of 0.71 giving a total pressure of -0.16 kN/m^2. The net wall pressure is the difference between the external and internal pressures:

$$(0.726x0.76x0.82) - (-0.16) \quad = \quad 0.61 \text{ kN/m}^2$$

That this value is 50% in excess of the wall pressure calculated in accordance with EC1 must surely be a matter for concern. The previous British standard, CP3, Chapter V, gives a total building force of 152 kN and a wall pressure of 0.51 kN/m^2.

2.4 Foundation Design

2.4.1 Geotechnical Design and Cases A, B and C

Eurocode 1 requires that designs must satisfy three cases, A, B and C, with different sets of partial factors for the actions and material properties for each case given in Table 9.2. Case A is concerned mainly with the stability of structures where the strength of the ground or structural materials is of minor importance and so is not normally relevant for buildings. Case B is the standard case for designs involving the strength of structural materials and has been used in the examples above. In Case B the partial factor on permanent actions is 1.35. In many geotechnical design situations, such as bearing resistance and slope stability, the weight of the soil may be both an action and a contribution to the resistance. It is largely for this reason that permanent actions are not factored in traditional geotechnical designs and that Case C, with a factor of unity on permanent actions and corresponding factors on soil strength parameters, has been introduced in Eurocode 1.

While Case B governs most structural designs and Case C most geotechnical designs, there are situations where this does not hold. To investigate this, three examples of foundations are given which demonstrate that the size of the foundation and the maximum bending moment can be governed by different combinations of Cases B and C. The examples are all for foundations founded at a depth of 1 m in a deposit of dry sand with $\phi' = 30°$ and unit weight equal to 18 kN/m^3. The foundation widths and maximum bending moments in the foundations are calculated for the ultimate limit state using the factors for Cases B and C given in EC1 - Part 1, Table 9.2 and the bearing resistance equations and factors given in EC7 (ENV 1997-1:1994).

The foundation size is first calculated for Cases B and C separately using the load and soil strength factors for each case. The case giving the larger width governs the design of the foundation size. The larger width is then used as the basis for determining the maximum bending moment for structural design of the foundation with both Case B and C loadings and assuming linear(uniform) bearing pressures beneath the foundation. If Cases B and C were treated totally separately, with the Case B width used to calculate the Case B bending moment and similarly for Case C, a smaller design bending moment would generally be obtained.

and:

$$w_e = 1.71\text{x}(-0.3)\text{x}0.276 = -0.14 \text{ kN/m}^2$$

This gives a total N-S wind force on the building of (0.36 + 0.14)(35x9) = 158 kN.

2.3.2 Wall Wind Pressure

As only one wall is being considered, the internal pressure coefficient, c_{pi} must be calculated. Because of the uniform distribution of openings around the perimeter, the opening ratio, μ, for the south wall is:

$$\mu = (\textit{length of walls other than south wall})/(\textit{total perimeter length})$$

$$= \frac{35 + 14 + 14}{35+14+35+14} = 0.64$$

In the graph of Fig. 6.10.2.9, c_{pi} varies linearly with μ. Interpolating gives:

$$c_{pi} = 0.8 - 1.3\left[\frac{\mu - 0.1}{0.9 - 0.1}\right] = 0.8 - 1.3\left[\frac{0.64 - 0.1}{0.8}\right] = -0.078$$

The mean height of the window openings is assumed to equal the mean building height of 4.5 m. As this is less than the minimum height, z_{min}, the roughness coefficient is:

$$c_r(z_i) = c_r(z_{min}) = k_r\, Ln(z_{min}/z_o) = 0.22\, Ln(8/0.3) = 0.722$$

The exposure coefficient at the mean height of the window openings is then:

$$c_e(z_i) = 0.722^2[1 + 7\text{x}0.22/0.722] = 1.63$$

Thus the internal wind pressure is:

$$w_i = c_e(z_i)c_{pi}q_{ref} = 1.63(-0.078)(0.276) = -0.035 \text{ kN/m}^2$$

Hence, according to EC1, the total wind pressure on the south wall is:

$$w_e - w_i = 0.36 - (-0.035) = 0.40 \text{ kN/m}^2$$

2.3.3 Comparison with National (British Standard) Code

The British standard, BS6399:Part 2 (1995), is similar in many respects to EC1 - Part 2.3 but is perhaps more complex. The basic wind speed for London specified in this standard is the same as the Eurocode value at 21 m/s and reduction factors, similar in definition to EC1, are taken for this example as unity. Taking the 'standard' approach gives a 'terrain and building' factor which increases the effective wind speed to 34.4 m/s and implies a dynamic wind pressure of 0.726 kN/m^2. External pressure coefficients, dependent on building geometry, are 0.76 and -0.26 for the south and north walls respectively and a size effect factor for external pressure is 0.82. The product of dynamic wind pressure, external pressure coefficient and size effect factor gives a wind pressure on each wall. However, to convert these to a total building force, the net pressure must

2.3 Wind Loading

The building illustrated in Fig. 1 is located at sea level in a suburban area outside London, 10 km from the sea. In order to check the capacity of the structure to resist applied horizontal forces, the total wind force in the N-S direction is required. In addition, the maximum wind pressure on the south wall is required for a check of the capacity of masonry wall panels. The interior of the building is open-plan and windows and doors are located uniformly around the perimeter.

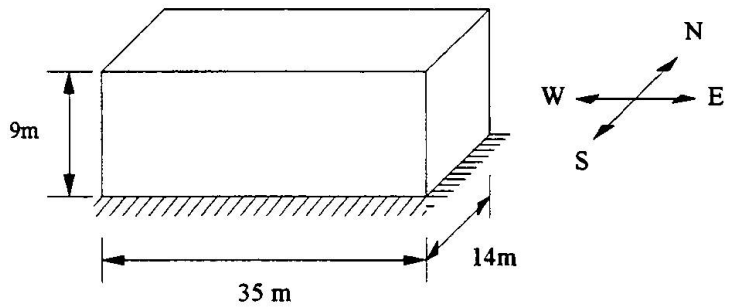

Fig. 1. Rectangular building

2.3.1 Total Wind Force on the Building

Taking the factors relating to direction (c_{DIR}), seasonal variation (c_{TEM}) and altitude (c_{ALT}) as unity, the reference wind velocity can be found directly from Fig. 6.7.2 in EC1 - Part 2.3 (ENV 1991-2.3:1993) and is taken for London to be 21 m/s. Hence the reference wind pressure is:

$$q_{ref} = 0.5\rho v_{ref}^2 = 0.5\text{x}1.25\text{x}21^2 = 276 \text{ N/m}^2$$

Taking a roughness category of 3 in Table 6.8.1, the terrain factor, $k_r = 0.22$, the roughness length, $z_o = 0.3$ m and the minimum height, $z_{min} = 8$ m. Hence the roughness coefficient at the top of the building is:

$$c_r(9) = k_r \, Ln(z/z_o) = 0.22 \, Ln(9/0.3) = 0.748$$

Taking a topography factor of unity, the exposure coefficient becomes:

$$c_e(9) = c_r^2(9)c_t^2(9)\left[1+\frac{7k_r}{c_r(9)c_t(9)}\right] = 0.748^2[1 + 7\text{x}0.22/0.748] = 1.71$$

Referring to Fig. 1, the ratio of building depth to height, d/h is 14/9 = 1.56. The external pressure coefficient for the front face, Zone D, is then interpolated from Table 6.10.2.2:

$$c_{pe} = 0.8 - 0.067(d/h - 1) = 0.763$$

while the corresponding coefficient for the back face, Zone E, is -0.3. The resulting wind pressures on the front and back faces of the building are respectively:

$$w_e = c_e(z_e)c_{pe}q_{ref} = 1.71\text{x}0.763\text{x}0.276 = 0.36 \text{ kN/m}^2$$

$$Q_k = 0.75 + 0.46 = 1.21 \text{ kN/m}^2$$

2.1.3 Discussion

The current British standard for loading on buildings, BS6399:Part 3 (1988) is similar to EC1 in its requirements for snow load. However it was common practice in the past among many Irish designers to use a notional value of 0.75 kN/m^2 for the **total** variable loading due to occupancy **and** snow. Further, the part of the roof being used as an escape route would have been designed for a floor loading of only 1.5 kN/m^2. Hence the total variable loadings would have been 1.5 kN/m^2 and 0.75 kN/m^2 for parts with unlimited and restricted access respectively compared with the much greater values of 3.46 kN/m^2 and 1.21 kN/m^2. required by EC1.

2.2 Ultimate Limit State Design Loading Intensities

The minimum and maximum ULS design loading intensities are required for the roof in the previous example for the transient design situation.

2.2.1 Minimum and Maximum ULS Loading Intensities

Using the unfactored loadings obtained above and EC1 - Part 1 (ENV 1991-1:1994), the total ULS loading is given by the combination equation:

$$\gamma_g 4.88 + \gamma_q(3.0 + \psi_o 0.46)$$

From EC1 - Part 1, Tables 9.2 and 9.3, the upper and lower limits on this total design loading are:

$$\text{Maximum} = 1.35(4.88) + 1.5[3.0 + 0.6(0.46)] = 11.50 \text{ kN/m}^2$$
$$\text{Minimum} = 1.0(4.88) + 0[3.0 + 0.6(0.46)] = 4.88 \text{ kN/m}^2$$

2.2.2 Discussion

For an example such as this, there is no equivalent in the British standards for the ψ_o combination factor. In current Irish (or UK) practice, ψ_o would be taken by default as unity.

Another difference in the design approach arises from footnote 3 to Table 9.2 of EC1 - Part 1 which states that all permanent actions from one source are multiplied by 1.35 if the total resulting action effect is unfavourable. Hence if, for example, a continuous beam were being analysed according to EC1, as the self weight is all from the same source, the minimum factors in this situation are $\gamma_g = 1.35$ and $\gamma_q = 0$ resulting in a minimum loading of:

$$\text{Minimum} = 1.35(4.88) + 0[3.0 + 0.6(0.46)] = 6.59 \text{ kN/m}^2$$

However, using the British standards, factors of $\gamma_g = 1.0$ and $\gamma_q = 0$ would be applied to alternate spans resulting in a minimum loading of 4.88 kN/m^2.

2. Examples

2.1 Roof Loading

A hotel is to be constructed in County Wicklow, Ireland, 150 m above sea level. Part of the roof is to be used as a fire escape route. It is made of a reinforced concrete slab of thickness 175 mm which is covered in a lightweight sealant. The roof is sloped at 1:10 to facilitate the runoff of water. The design permanent and variable gravity loading intensities are required. The vertical loading due to wind does not govern the roof design.

2.1.1 Total Loading on Roof Parts with Unlimited Access

The permanent gravity loading consists of the self weight plus an allowance for ceilings and services:

Slab self weight = (25)(0.175) =	4.38 kN/m^2
Ceilings and services =	0.50 kN/m^2
Total permanent gravity load, G_k =	4.88 kN/m^2

When a roof is accessible, the variable loading due to occupancy should equal the loading for the area from which there is access. For this example, access will be through the stairs. From EC1 - Part 2.1 (ENV 1991-2.1:1993) the imposed variable gravity loading for a stairs in a residential buildings is 3.0 kN/m^2. This, together with the snow loading, constitutes the total variable gravity loading. From the snow load contour map in EC1 - Part 2.1, the basic snow load for County Wicklow (south of Dublin) is, s_b = 0.5 kN/m^2. The characteristic snow load is calculated from the equation:

$$s_k = s_b + (0.09 + 0.1s_b)(A - 100)/100$$

where A is the altitude which, in this case, is 150 m. Hence:

$$s_k = 0.5 + (0.09 + 0.1\text{x}0.5)(150 - 100)/100 = 0.57 \text{ kN/m}^2$$

From EC1 - Part 2.1, a slope of 1 in 10 (or 6°) implies a shape coefficient, μ_i of 0.8. Hence, assuming unit exposure and thermal coefficients, the design snow load intensity is obtained from:

$$s = \mu_i C_e C_t s_k = (0.8)(1)(1)(0.57) = 0.46 \text{ kN/m}^2$$

Thus the total variable gravity loading, Q_k = 3.0 + 0.46 = 3.46 kN/m^2.

2.1.2 Variable Loading on Roof Parts with Restricted Access

The escape route for this building is limited to one portion of the roof, with access to the remaining area closed off by a masonry wall. The permanent gravity loading for the escape route is unchanged at 4.88 kN/m^2. As there is restricted access to the rest of the roof, a loading intensity of 0.75 kN/m^2 can be adopted for variable loading due to occupancy. Hence the total variable gravity loading is: