Zeitschrift: IABSE reports = Rapports AIPC = IVBH Berichte
Band: 73/1/73/2 (1995)

Artikel: Presidio viaduct seismic retrofitting
Autor: Bach, Paul E.
DOI: https://doi.org/10.5169/seals-55245

Nutzungsbedingungen
Die ETH-Bibliothek ist die Anbieterin der digitalisierten Zeitschriften auf E-Periodica. Sie besitzt keine Urheberrechte an den Zeitschriften und ist nicht verantwortlich für deren Inhalte. Die Rechte liegen in der Regel bei den Herausgebern beziehungsweise den externen Rechteinhabern. Das Veröffentlichen von Bildern in Print- und Online-Publikationen sowie auf Social Media-Kanälen oder Webseiten ist nur mit vorheriger Genehmigung der Rechteinhaber erlaubt. Mehr erfahren

Conditions d'utilisation
L'ETH Library est le fournisseur des revues numérisées. Elle ne détient aucun droit d'auteur sur les revues et n'est pas responsable de leur contenu. En règle générale, les droits sont détenus par les éditeurs ou les détenteurs de droits externes. La reproduction d'images dans des publications imprimées ou en ligne ainsi que sur des canaux de médias sociaux ou des sites web n'est autorisée qu'avec l'accord préalable des détenteurs des droits. En savoir plus

Terms of use
The ETH Library is the provider of the digitised journals. It does not own any copyrights to the journals and is not responsible for their content. The rights usually lie with the publishers or the external rights holders. Publishing images in print and online publications, as well as on social media channels or websites, is only permitted with the prior consent of the rights holders. Find out more

Download PDF: 18.02.2026

ETH-Bibliothek Zürich, E-Periodica, https://www.e-periodica.ch

Presidio Viaduct Seismic Retrofitting

Consolidation parasismique du viaduc Presidio

Erdbebenverstärkung des Presidio Viaduct

Paul E. BACH
President
Ben C. Gerwick, Inc.
San Francisco, CA, USA

Paul E. Bach, born in 1945, received his civil engineering degree at the Technical University of Denmark, Copenhagen. For the last 6 years, he has been involved in seismic retrofit projects for bridges and wharves and preliminary engineering for foundations of several new bridges.

SUMMARY

Following the 1989 sizeable earthquake, for the first time affecting the San Francisco Bay Area's major bridge structures, a high priority seismic retrofit program was initiated by the California Department of Transportation. This contribution reports on the engineering design services for seismic upgrading of the Presidio Viaduct, close to the Golden Gate Bridge.

RÉSUMÉ

A la suite du violent tremblement de terre de 1989 qui, pour la première fois, affecta dangereusement les structures porteuses des grands ponts de la baie de San Francisco, le Ministère des transports de l'État de Californie ordonna un programme prioritaire de consolidation parasismique de ces ouvrages. L'article traite des études menées par les ingénieurs responsables du renforcement du viaduc Presidio, une importante voie de communication à proximité du pont de Golden Gate.

ZUSAMMENFASSUNG

Als Folge des beträchtlichen Erdbebens von 1989, das erstmals die grösseren Brückentragwerke in der Bay-Area von San Francisco traf, veranlasste das Verkehrsdepartement von Kalifornien ein dringliches Erdbebenverstärkungsprogramm. Der vorliegende Beitrag berichtet von der Ingenieurtätigkeit für die Verstärkung des Presidio Viaduct, einer Hochstrasse nahe der Golden-Gate-Brücke.

Presidio Viaduct carries US 101 over a valley in the northern part of the "Presidio of San Francisco", approximately 1 mile south of the Golden Gate Bridge. The viaduct accomodates 6 narrow driving lanes that allow a 4-2 and 2-4 lane split during morning and evening commute hours to and from San Francisco. The viaduct has a total length of approximately 1,500' and comprise the following elements:

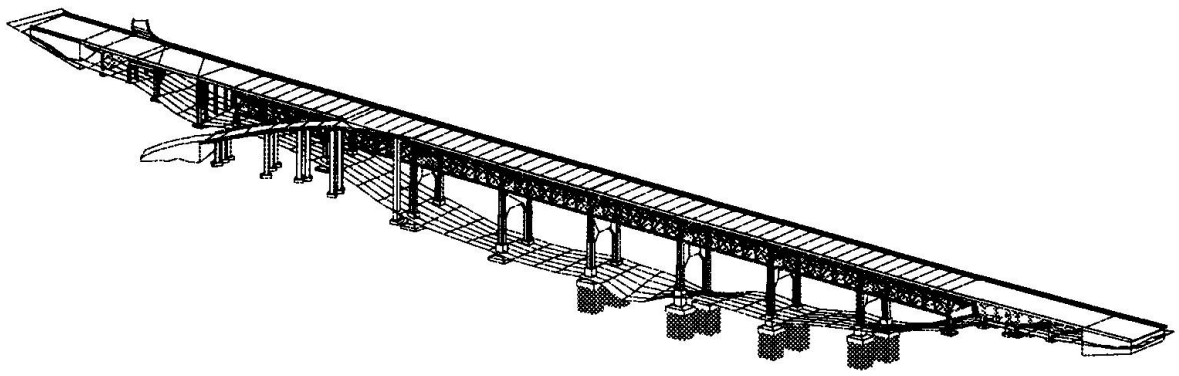

- East Approach: Four simply supported structures with steel stringers supporting reinforced concrete decks. Substructures comprise reinforced concrete bents on spread footings.
- Viaduct : Eight, 135' span, simply supported steel truss frames supporting reinforced concrete decks. Substructures comprise reinforced concrete columns and bents, partly on spread footings and partly on piled foundations.
- West Approach: A six span structure with combinations of steel and concrete stringers supporting reinforced concrete decks. Substructures comprise reinforced concrete bents on spread footings.

The structures were built 1935-39 and were retrofitted with restrainers at all simply supported superstructure supports in 1983. The as-built structure has been analyzed and evaluated with global, elastic stick models, detailed elastic frame models and push-over/displacement ductility analysis to expose potentially weak elements under heavy seismic loads.

An important assumption in all our analysis is the behavior of the transverse joints in the reinforced concrete deck slabs of the main viaduct. These joints separate the deck above the floor beams at a spacing of about 20'. Therefore, the deck does not act as a continuous compression flange under gravity loads. On the other hand, a careful study of the structural details of the bridge deck system reveals that it may safely be assumed that

horizontal, transverse, seismic shear forces in the deck slab can be fully transferred across the joints through stringers and floor beams to the end frames.

Our analysis has revealed the following critical problems in the main viaduct, the approaches and the ramp:

LOCATION	PROBLEM	RETROFIT ALTERNATIVE
VIADUCT SUPER - STRUCTURE	Buckling of Slender Steel Truss Members in End Frames	End Frame Retrofit Base Isolation Deck Replacement
VIADUCT BEARINGS	Insufficient Shear Capacity in Restrainers/ Concentration of long. loads on short columns	New Steel Collars & Restrainers/ Removal of Existing Restrainers
VIADUCT SUB - STRUCTURE	High Moment D/C Ratios (4 to 8+ Range) & High Shear forces in Plastic Zones Insufficient Confinement Steel in Columns	Steel Jackets Concrete Jackets Prestressing Shear Walls Combinations
VIADUCT FOUNDATIONS	No Top Mat in Foundations	Foundation Top Mats
APPROACHES	High Moment D/C Ratios (4 to 8+ Range) & High Shear forces in Plastic Zones Insufficient Confinement Steel in Columns Plastic hinging in cap beams Instability of spread footings	Steel Jackets Cap beam strengthening Foundation enlargement
RAMP	High Moment D/C Ratios (4 to 8+ Range) & High Shear forces in Plastic Zones Insufficient Confinement Steel in Columns Large deflections relative to viaduct	Steel Jackets Expansion joint upgrading

TABLE 1: POTENTIALLY WEAK ZONES OF EXISTING STRUCTURE

Several alternative methods of retrofitting the viaduct were considered. These were all analyzed and verified by appropriately modified global, elastic stick models and detailed elastic frame models. Careful evaluation of traffic and construction issues were made in addition to possibilities for phasing of the work, temporary shoring and construction risk.

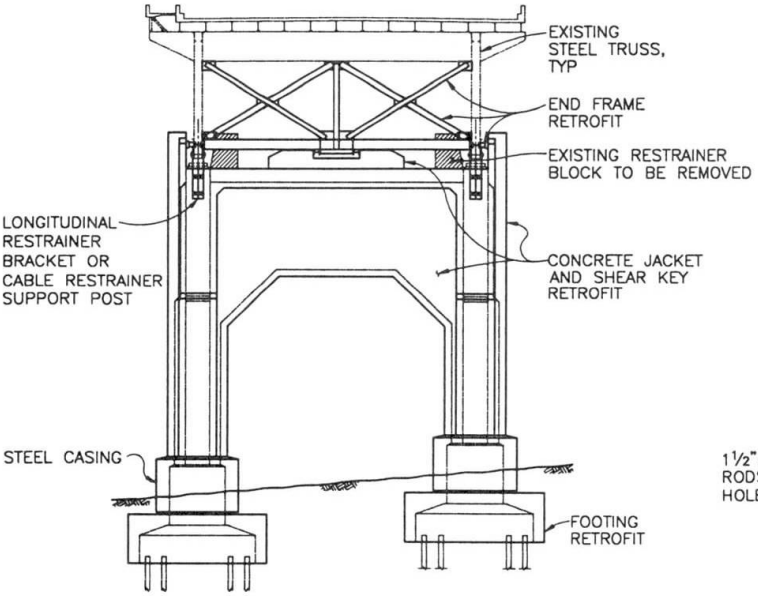

TYPICAL SECTION PIERS 3–8

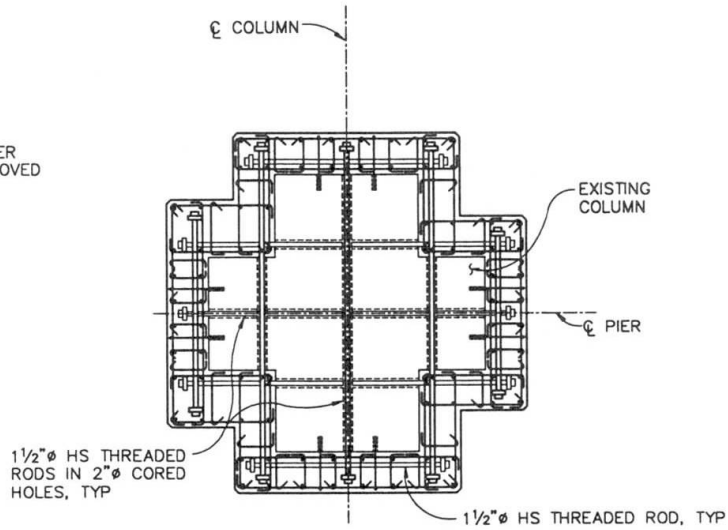

PIER SECTION

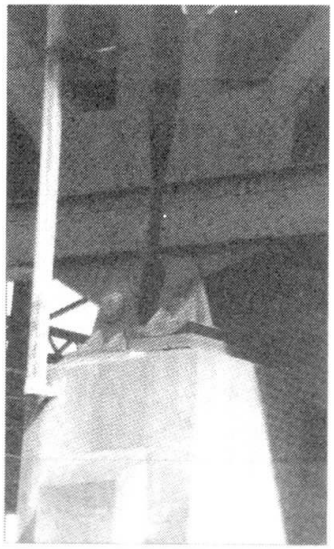

DETAIL AT TRUSS SUPPORTS

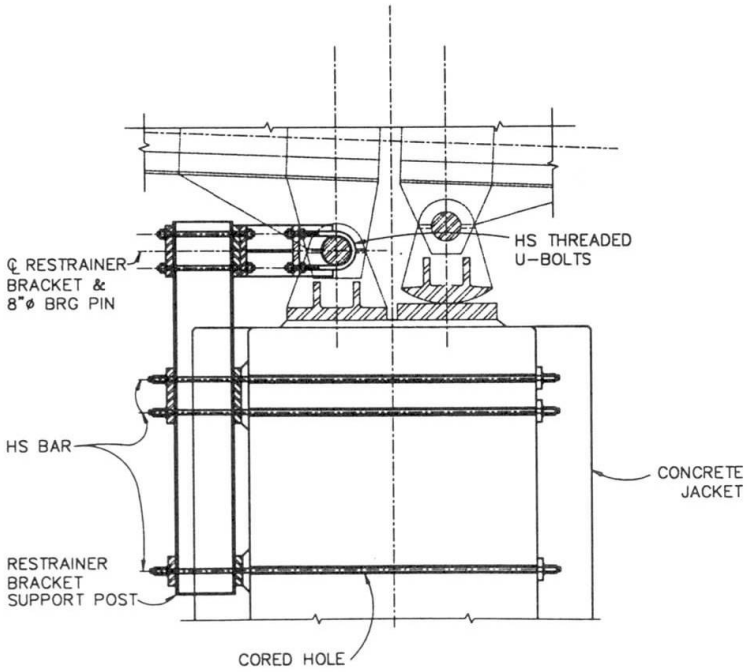

LONGITUDINAL RESTRAINER BRACKET

Finally, an attempt was made to develop preliminary construction costs for the various retrofit alternatives. A "fatal flaw" analysis was then carried out to eliminate some of the marginally acceptable solutions. The main result of the fatal flaw analysis is shown below:

VIADUCT	RETROFIT ALTERNATIVE	FATAL FLAWS
SUPER - STRUCTURE	End Frame Retrofit	-
	Base Isolation	Deflections Installation
	Deck Replacement	Costs
BEARINGS	New Steel Collars & Restrainers/ Removal of Existing Restrainers	-
SUB - STRUCTURE	Steel Jackets	Complex detailing at haunched sections
	Concrete Jackets	Insufficient confinement
	Prestressing	Installation Insufficient confinement
	Shear Walls	Weight Aesthetics Causes Foundation Problems Poor Torsion Characteristics
	Combination steel/ concrete jackets	-
FOUNDATIONS	Foundation Top Mats	-

TABLE 2: FATAL FLAW ANALYSIS OF RETROFIT ALTERNATIVES

As an alternative to the maximum credible earthquake approach in the standard Caltrans procedures (safety evaluation), a design peak bedrock acceleration level for the next 10-20 years of exposure has been evaluated by our Geotechnical Consultant (functional evaluation). The bedrock acceleration will of course be smaller than the 0.6 g used for the analysis of the Presidio Viaduct. In view of future decision making, we have obtained the D/C ratio's of the structure for smaller levels of bedrock acceleration.

A 0.2 g design level would result in a potentially cheaper retrofit alternative, essentially avoiding the jacketing of the substructure bents and replacement of restrainers of the main viaduct. In addition, no retrofit would be required for the ramp structure.

A 0.4 g design level appears equivalent to a 0.6 g design level in terms of extent and costs of seismic retrofit.

Based on our analysis and the developed construction costs for each of the retrofit alternatives for the viaduct and the proposed retrofit for the approaches and ramp, our recommended retrofit solutions were developed.

LOCATION	ELEMENT	ALTERNATIVE	ESTIMATED COST	RECOMMENDATION
VIADUCT	SUPER - STRUCTURE	End Frame Retrofit	$1,000,000	$1,000,000
		Base Isolation	$2,800,000	
		Deck Replacement	$8,600,000	
	BEARINGS	New Steel Collars & Restrainers/ Removal of existing Restrainers	$ 300,000	$ 300,000
	SUB - STRUCTURE	Steel Jackets	$1,600,000	
		Concrete Jackets	$1,500,000	
		Combination steel/ concrete Jackets	$1,600,000	$1,600,000
		Prestressing	N.A.	
		Shear Walls	$1,300,000	
	FOUNDATIONS	Foundation Top Mats	$ 500,000	$ 500,000
APPROACHES		Steel Jackets, Cap Beam & Foundation Retrofit	$ 900,000	$ 900,000
RAMP		Steel Jackets/Exp. Joint Upgrade	$ 700,000	$ 700,000
TOTALS	Subtotal			$5,000,000
	Mobilization (10%)			$ 500,000
	Subtotal			$5,500,000
	Contingency (25%)			$1,400,000
	TOTAL			$6,900,000

TABLE 3: RECOMMENDED SEISMIC RETROFIT ALTERNATIVE

The adopted retrofit strategy includes strengthening the truss end frames for lateral stability, strengthening of the truss rocker bearing pin plates, longitudinal and transverse restraining elements at the rocker bearing level to prevent instability, combination of steel and concrete confinement jackets for increased ductility and shear resistance, and reinforced concrete overlays at spread footings and pilecaps.