Zeitschrift: IABSE reports = Rapports AIPC = IVBH Berichte

Band: 73/1/73/2 (1995)

Artikel: Seismic strengthening of reinforced concrete columns with inadequate lap splices

Autor: Aboutaha, Riyad S. / Jirsa, James O. / Engelhardt, Michael D.

DOI: https://doi.org/10.5169/seals-55205

Nutzungsbedingungen

Die ETH-Bibliothek ist die Anbieterin der digitalisierten Zeitschriften auf E-Periodica. Sie besitzt keine Urheberrechte an den Zeitschriften und ist nicht verantwortlich für deren Inhalte. Die Rechte liegen in der Regel bei den Herausgebern beziehungsweise den externen Rechteinhabern. Das Veröffentlichen von Bildern in Print- und Online-Publikationen sowie auf Social Media-Kanälen oder Webseiten ist nur mit vorheriger Genehmigung der Rechteinhaber erlaubt. Mehr erfahren

Conditions d'utilisation

L'ETH Library est le fournisseur des revues numérisées. Elle ne détient aucun droit d'auteur sur les revues et n'est pas responsable de leur contenu. En règle générale, les droits sont détenus par les éditeurs ou les détenteurs de droits externes. La reproduction d'images dans des publications imprimées ou en ligne ainsi que sur des canaux de médias sociaux ou des sites web n'est autorisée qu'avec l'accord préalable des détenteurs des droits. En savoir plus

Terms of use

The ETH Library is the provider of the digitised journals. It does not own any copyrights to the journals and is not responsible for their content. The rights usually lie with the publishers or the external rights holders. Publishing images in print and online publications, as well as on social media channels or websites, is only permitted with the prior consent of the rights holders. Find out more

Download PDF: 22.10.2025

ETH-Bibliothek Zürich, E-Periodica, https://www.e-periodica.ch

Seismic Strengthening of Reinforced Concrete Columns with Inadequate Lap Splices

Renforcement parasismique de colonnes en béton armé avec un recouvrement inadéquat des barres d'armature

Verstärkung von Stahlbetonstützen mit ungenügenden Bewehrungsstössen gegen Erdbeben

Riyad S. ABOUTAHA
Assistant Professor
Georgia Inst. of Technology
Atlanta, GA, USA

Michael D. ENGELHARDT
Associate Professor
Univ. of Texas at Austin
Austin, TX, USA

James O. JIRSA
Professor
Univ. of Texas at Austin
Austin, TX, USA

Michael E. KREGER
Associate Professor
Univ. of Texas at Austin
Austin, TX, USA

SUMMARY

Results of an experimental investigation on the use of rectangular steel jackets for seismic strengthening of non-ductile rectangular reinforced concrete columns with inadequate lap splices in the longitudinal reinforcement are presented. The test columns were detailed with short lap splices and were lightly reinforced with transverse reinforcement. Columns were tested under cyclic lateral loads. The basic unretrofitted columns showed an early failure of the lap splices which resulted in dramatic loss of lateral strength and stiffness. The columns strengthened with steel jackets and adhesive anchor bolts showed excellent response, exhibiting higher strength, ductility and energy dissipation.

RÉSUMÉ

L'article présente les résultats d'une recherche sur l'emploi de manchons rectangulaires pour le renforcement parasismique de colonnes en béton armé avec un recouvrement inadéquat des barres d'armature longitudinales. Les colonnes-éprouvettes avaient de petits recouvrements d'armature et étaient légèrement renforcées transversalement. Les essais ont eu lieu pour des charges cycliques latérales. Les colonnes originales, non consolidées, ont rapidement présenté des dégâts, réduisant considérablement la résistance latérale et la rigidité de la colonne. Les colonnes consolidées par manchons métalliques et boulons d'ancrage collés ont présenté un comportement excellent, avec de grandes résistance, ductilité et dissipation d'énergie.

ZUSAMMENFASSUNG

Berichtet wird von Versuchen zur Blechummantelung von Stahlbetonstützen, deren Längsbewehrung erdbebenuntaugliche Ueberlappungsstösse aufweist. Teststützen mit kurzen Ueberlappungslängen und leichter Querbewehrung wurden zyklischer Horizontalbelastung unterworfen. Sie versagten frühzeitig an den Stössen, mit dramatischer Einbusse an seitlicher Steifigkeit und Festigkeit. Hingegen zeigten die mit Blechmantel und Klebedübel verstärkten Stützen ein hervorragendes Verhalten mit höherer Festigkeit, Duktilität und Energiedissipation.

1. INTRODUCTION

Older reinforced concrete columns were often designed primarily for gravity loads. Consequently, they were detailed as axially compression members, with lap splices in the longitudinal reinforcement proportioned as compression lap splices. However, during an earthquake, column bars may experience large tensile forces, which requires a longer well confined splice proportioned as a tensile lap splice. For ease of construction, column bars were often spliced just above floor levels, a potential hinge region, in columns, during an earthquake. Older columns were lightly reinforced with transverse reinforcement, which resulted in poorly confined lap splices. Being short, poorly confined and located in a potential plastic hinge region, older lap splices may cause failure of concrete columns during an earthquake. The current provisions of the ACI code 318-89 [1] allows splicing column longitudinal bars, only within the center half of the column, and if only proportioned as tension splices.

One possible method for strengthening columns with inadequate lap splices is the use of rectangular steel jackets. In this paper, results of an experimental research program, conducted at The University of Texas at Austin, on the use of rectangular steel jackets for seismic strengthening of rectangular concrete columns with inadequate lap splices in the longitudinal reinforcement are presented. Six large scale columns are reported, three were basic unretrofitted columns and the remaining three were retrofitted with steel jackets before testing. The major variables investigated in this series were the width of the column and the amount and distribution of adhesive anchor bolts.

2. TEST PROGRAM

2.1 Test Setup and Loading Program

Figure 1. shows the test setup. The test column is a cantilever specimen, representing the lower half of a real building column. Columns were laterally loaded at the tip of the column, but without axial load. The lateral loads were increased in 22 kN increments until significant inelastic displacement was observed. In the inelastic range the loading was increased in displacement increments equivalent to 0.5 % drift ratio. All the test columns were loaded in the weak direction.

2.2 Test Columns

The basic unstrengthened columns FC1, FC2 and FC3 were 915 mm, 686 mm and 457 mm wide, respectively. The corresponding strengthened columns were designated FC1S, FC2S and FC3S respectively. Figure 2. shows the details of the basic columns. The longitudinal bars were 25 mm in diameter. The transverse reinforcement was 9.5 mm in diameter spaced at 406 mm. Table 1. shows the properties of the test columns. All the longitudinal bars were spliced at the bottom of the column. The splice length was 610 mm which corresponds to 24 times the diameter of the bar. The test columns were detailed according to the provisions of the ACI 318-63 [2], which allows the use of a cross tie at every other longitudinal bar if the spacing between the main bars is less than 150 mm. The actual yield strength of the longitudinal bars and the transverse ties were 435 MPa and 400 MPa, respectively.

The retrofitted columns were similar to their corresponding basic columns, but were strengthened by the use of steel jackets and adhesive anchor bolts before testing. Figures 3, 4 and 5 show the details of the retrofitted columns FC1S, FC2S and FC3S, respectively. The sides of the steel jacket were made of 6 mm steel plates and the corners of the steel jacket were 50x50x6 mm steel angles which were welded to the steel plates. All the steel jackets had similar details with the exception of the steel jacket of column FC3S, which had four additional 75x75x6 mm angles, as shown in Figure 5. These additional angles were welded to the steel jacket after the setting of the non-shrink grout. The actual yield strength of the steel plates was 345 MPa. Since the concrete column section was quite symmetrical about the weak axis, two different patterns of anchor bolts were installed on the opposite faces of

the column, as shown in Figures 4 and 5. The steel jackets extended over the bottom 915 mm of the column height, which corresponded to 1.5 times the length of the splice.

The steel jackets were pre-fabricated in two L-shaped panels in plan, as shown in Figure 6. The two opposite free ends of the steel jacket were welded after being assembled around the column. The 25 mm gap between the concrete column and the steel jacket was filled with non-shrink cementitious grout. The adhesive anchor bolts were 25 mm in diameter and 300 mm in length. Bolts were installed in pre-drilled holes using an adhesive compound, and were embedded 200 mm into the concrete column.

Column #	Size (width* depth) (mm)	Main Bars (number-Diameter)	Transverse Ties (number-diameter)	Concrete Strength (MPa)*	Grout Strength (MPa)*	Bolts** East Side	Bolts ** West Side	Description
FC1	915x457	16-25mm	5-9.5mm	19.7	-----	-----	-----	basic
FC2	686x457	12-25mm	4-9.5mm	28.7	-----	-----	-----	basic
FC3	457x457	8-25mm	2-9.5mm	28.7	-----	-----	-----	basic
FC1S	915x457	16-25mm	5-9.5mm	22.5	43.2	2L3B	2L2B	strengthened
FC2S	686x457	12-25mm	4-9.5mm	17.7	38.6	1L2B	None	strengthened
FC3S	457x457	8-25mm	2-9.5mm	18.1	51.3	None	None	strengthened

* Strength at the day of Testing. ** L = Vertical Line(s), B = Adhesive Anchor Bolts. Example: 2L3B = 2 lines of anchor bolts; each line with 3 bolts.

Table 1 Properties of the test columns

3. TEST RESULTS

Figure 7 (a-f) shows the hysteretic response of the test columns. As shown in Figure 7 (a-c) the basic unretrofitted columns exhibited non-ductile flexural response. Lap splice failure occurred before the development of the flexural capacities of the columns. The splice failure was always associated with vertical splitting cracks along the full length of the splice. After splice failure, the columns rapidly lost lateral strength and stiffness. All the basic unretrofitted columns showed essentially no ductility and very limited energy dissipation.

The retrofitted columns exhibited very satisfactory response, as shown in Figure 7 (d-f). Both sides of column FC1S performed very well, and the flexural capacity was developed without any lap splice failure. The response of column FC1S suggests that just two adhesive anchor bolts near the top and two near the bottom of the jacket are sufficient for strengthening 915 mm wide columns with inadequate lap splices. However, for narrower columns fewer bolts are required, as indicated by the results of columns FC2S and FC3S. Welding the additional four angles on the steel jacket of column FC3S after the setting of the non-shrink grout appeared to develop some tensile residual stresses in the steel jacket. The tensile residual stresses provided active confinement for the splice region, which resulted in high energy dissipation. Additional details on the performance of the reported columns can be found in reference [3].

4. SUMMARY

Six large scale columns with inadequate lap splices in the longitudinal reinforcement were investigated under cyclic lateral loads. Columns were tested with and without rectangular steel jackets. The details and the cyclic response of the columns were presented. Test results suggest that rectangular steel jackets with adhesive anchor bolts are very effective in strengthening columns with inadequate lap splices. For the narrower column tested in this program (457 mm width), a plain steel jacket without anchor bolts significantly improved its seismic response.

REFERENCES

1. ACI Building Code Requirements for Reinforced Concrete (ACI 318-89), American Concrete Institute, Detroit, Michigan, 1989.
2. ACI Building Code Requirements for Reinforced Concrete (ACI 318-63), American Concrete Institute, Detroit, Michigan, 1963.
3. Aboutaha, Riyad S. "Seismic Retrofit of Non-Ductile Reinforced Concrete Columns Using Rectangular Steel Jackets," Ph.D. Dissertation, The University of Texas at Austin, Austin, Texas, 1994.

ACKNOWLEDGMENTS

The writers gratefully acknowledge the financial support provided by The National Science Foundation (Grant No. BCS - 9016828). This project is part of the NSF program on Repair and Rehabilitation Research for Seismic Resistance of Structures. Additional support was provided through NSF Grant No. CMS-9358186. The writers also thank Loring A. Wyllie Jr. and Thomas A. Sabol for providing many useful suggestions and comments during the course of this project. Thanks are also extended to Hilti Inc. for donating the adhesive anchor bolts and construction tools used in this research.

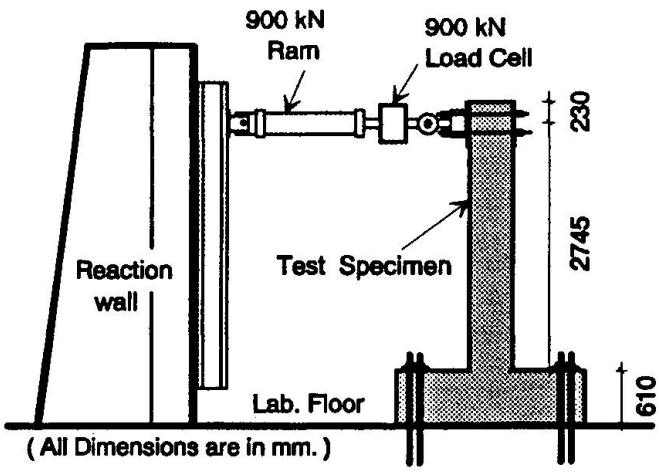

Fig. 1 Test Setup

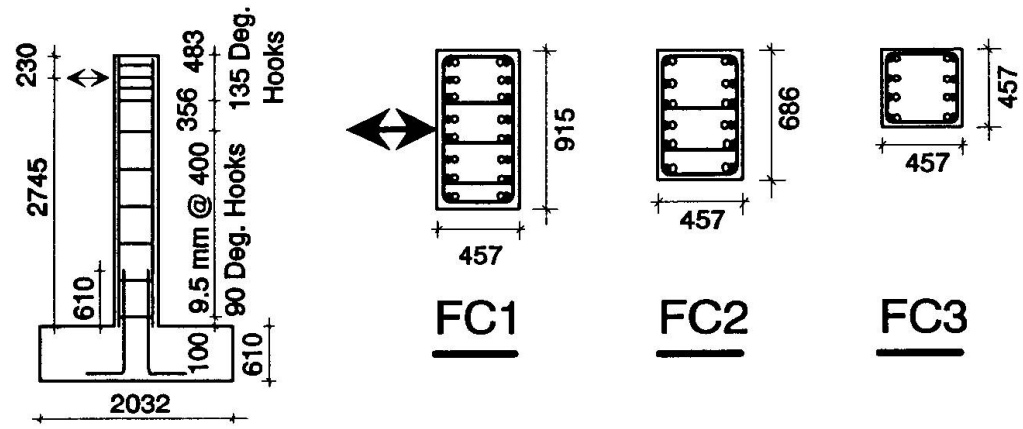

Fig. 2 Basic Unretrofitted Columns FC1, FC2 and FC3

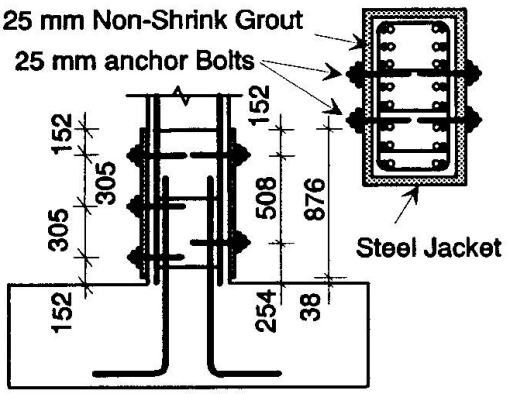

Fig. 3 Strengthened Column FC1S

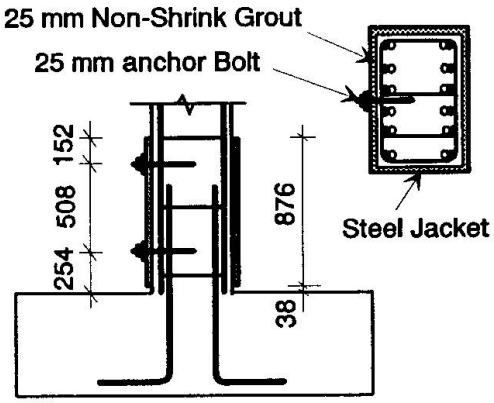

Fig. 4 Strengthened Column FC2S

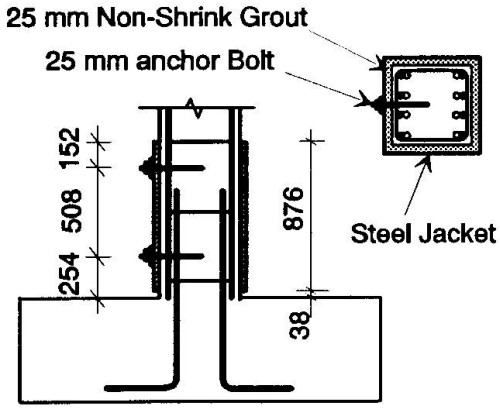

Fig. 5 Strengthened Column FC3S

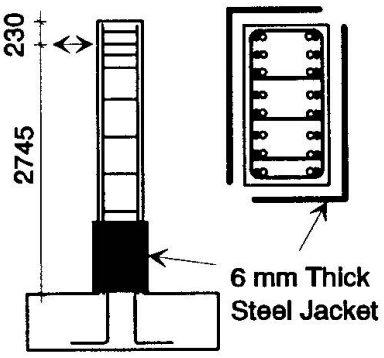

Fig. 6 Assembling of Steel Jacket

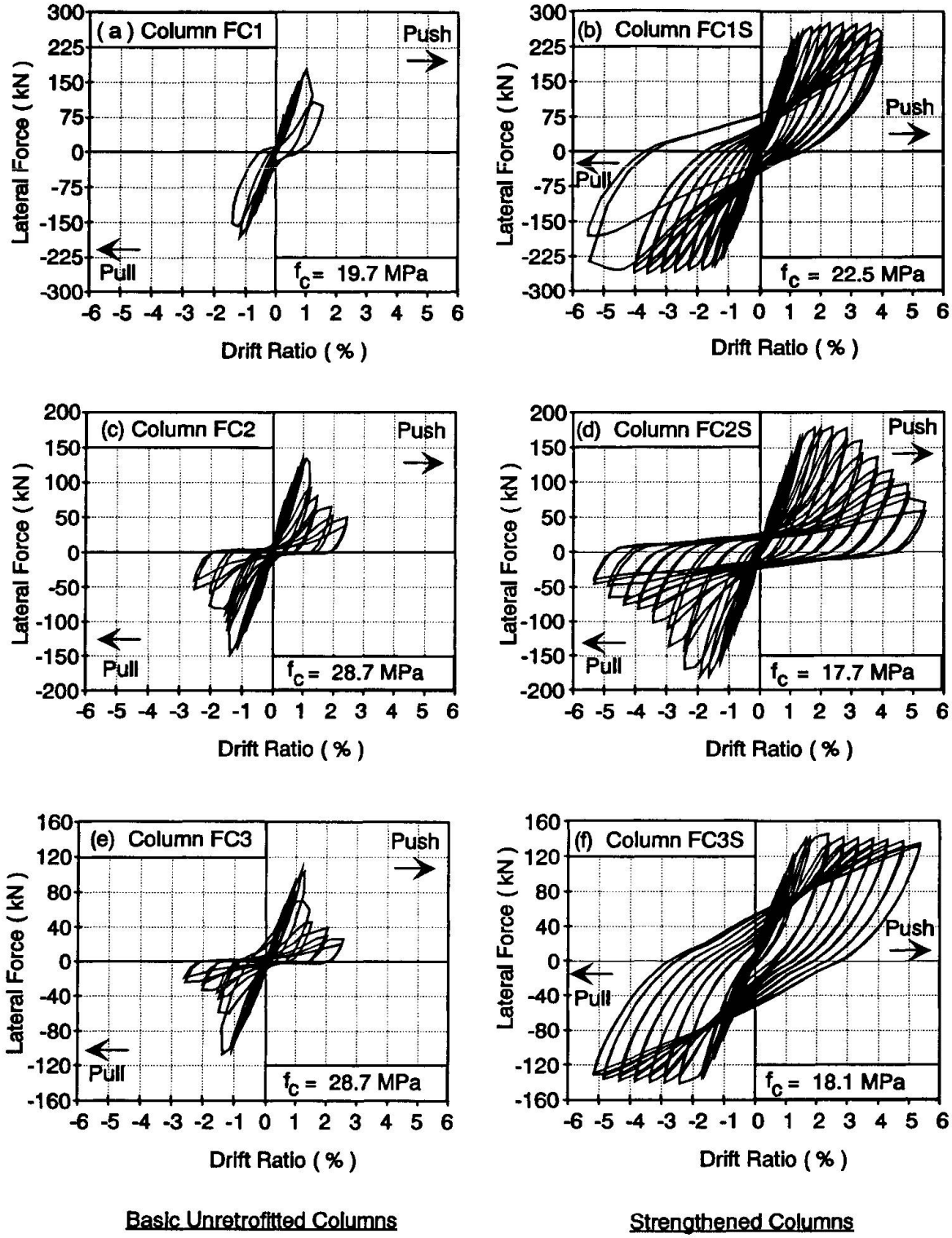

Basic Unretrofitted Columns

Strengthened Columns

Fig. 7 (a-f) The hysteretic response of the test columns