**Zeitschrift:** IABSE reports = Rapports AIPC = IVBH Berichte
**Band:** 73/1/73/2 (1995)

**Artikel:** Identification of the computational model of a drawbridge span
**Autor:** Dorobczynski, Jerzy / Karczewski, Jan A. / Paczkowski, Witold M.
**DOI:** https://doi.org/10.5169/seals-55310

**Nutzungsbedingungen**
Die ETH-Bibliothek ist die Anbieterin der digitalisierten Zeitschriften auf E-Periodica. Sie besitzt keine Urheberrechte an den Zeitschriften und ist nicht verantwortlich für deren Inhalte. Die Rechte liegen in der Regel bei den Herausgebern beziehungsweise den externen Rechteinhabern. Das Veröffentlichen von Bildern in Print- und Online-Publikationen sowie auf Social Media-Kanälen oder Webseiten ist nur mit vorheriger Genehmigung der Rechteinhaber erlaubt. Mehr erfahren

**Conditions d'utilisation**
L'ETH Library est le fournisseur des revues numérisées. Elle ne détient aucun droit d'auteur sur les revues et n'est pas responsable de leur contenu. En règle générale, les droits sont détenus par les éditeurs ou les détenteurs de droits externes. La reproduction d'images dans des publications imprimées ou en ligne ainsi que sur des canaux de médias sociaux ou des sites web n'est autorisée qu'avec l'accord préalable des détenteurs des droits. En savoir plus

**Terms of use**
The ETH Library is the provider of the digitised journals. It does not own any copyrights to the journals and is not responsible for their content. The rights usually lie with the publishers or the external rights holders. Publishing images in print and online publications, as well as on social media channels or websites, is only permitted with the prior consent of the rights holders. Find out more

**Download PDF:** 18.02.2026

**ETH-Bibliothek Zürich, E-Periodica, https://www.e-periodica.ch**

# Identification of the Computational Model of a Drawbridge Span

Identification du modèle mathématique de la travée d'un pont-levis

Identifikation des Berechnungsmodells vom Feld einer Zugbrücke

**Jerzy DOROBCZYNSKI**
Associate Professor
Techn. Univ. of Szczecin
Szczecin, Poland

**Jan A. KARCZEWSKI**
Professor
Warsaw Univ. of Technology
Warsaw, Poland

**Witold M. PACZKOWSKI**
Senior Lecturer
Techn. Univ. of Szczecin
Szczecin, Poland

Jerzy Dorobczynski, born in 1927, received his civil engineering degree at the Technical University of Szczecin. For more than 35 years he has been working on the analysis of the real behaviour of steel bridges.

Jan Karczewski, born in 1937, received his civil engineering degree at the Warsaw University of Technology. For more than 30 years he has been involved in special problems of steel structures in civil engineering.

Witold Paczkowski, born in 1953, received his civil engineering degree at the Technical University of Szczecin. Since more than 15 years his research themes are optimisation and structure identification.

## SUMMARY

The paper presents the tensometric measurement results for a drawbridge span. These measurements were done before and after modernisation of the bridge. They provided the basic data for the mathematical model of a span using the identification method compared with the real object. They were also useful in a process of reconstruction and rectification during the assembly of the span.

## RÉSUMÉ

L'article présente les résultats d'essais extensométriques de la travée mobile d'un pont-levis. Les essais ont été effectués avant et après une modernisation du pont. Les résultats obtenus ont servi à la création d'un modèle mathématique de la travée par la méthode de l'identification avec un objet réel. Ces résultats servent aussi de base pour l'introduction des modifications avant et pendant la construction.

## ZUSAMMENFASSUNG

Es werden die Ergebnisse der Tensometeruntersuchungen vom Feld der Strassenzugbrücke dargestellt. Die Untersuchungen wurden vor und nach der Modernisierung der Brücke durchgeführt. Die gewonnenen Ergebnisse dienten der Erstellung eines Berechnungsmodells des Feldes mittels der Methode der Identifikation mit dem realen Objekt. Sie wurden auch zur Grundlage der Einführung von Konstruktionsänderungen und Berichtigung des montierten Feldes benutzt.

## 1. INTRODUCTION

The real behaviour of a structure often differs from the assumed designer's model. Especially in the structures that exist for dozens of years, it can be a result of some new functions that those structures care, the simplification of the computational model as well as changes that were done during erection. It has been well proved in some tensometric analysis of a drawbridge span, and seems to be one of the basic forms for the bridge model verification.

The object of this research will be a span of the road bridge on Dziwna river, one of the arms of Odra river. There was a temporary bridge made of steel and wood with one draw span erected in the fifties. After thirty years of using there were some restrictions put, connected with the mass and velocity of passing by dump trucks. It was a result of a wear of wood span elements and timber piles on which the fixed bearings were founded. In 1978 there were tensometric testing and model identification analysis carried out for one drawbridge span [1]. In 1990-94 the bridge was rebuilt and put in the line of old bridge axis. The fixed part of a bearing structure are made of continuous reinforced beams. The draw span was modernized during the reconstruction too. Leaving the main girders made of rolled steel joists intact, the bridge deck and pedestrian pass were widened. It was made as a new orthotropic platform. Fig. 1 shows the cross sections of the draw span before (d) and after modernization (e). Because of a greater load of the moving span, the lifting gear had to be strenghten, i.e. the extractor trusses and hangers. The hangers got adjusting bolts to simplify both assembly and rectification of the extractor system. After the assembly, the geodetic surveying showed that the planes perpendicular to the upper and lower pin axis were not planar. The big stresses in the hangers involved the designing of some additional hinges in span - hanger connection. After the new connections had been made, the tensometic tests were done again.

## 2. PRIOR TO BRIDGE MODERNIZATION TESOMETRIC TESTS

Fig. 1b shows the horizontal projection of a draw span prior to modernization. The bearing structure is made of seven steel girders crosswise braced. Its two hangers are made of 2 I NP 140. There is a crosswise put plate girder. Both bridge floor, platform and traverses are made of wood.

For the static trial loading the 120 kN lorry was used. Fig. 1f shows the dimensions and loads. There were 9 load schemes under analysis, for which the position of the lorry wheel and the direction of the lorry move shows fig. 2. It was done to receive the maximal stress in the side and middle main beam. The stresses were measured by a resistance wire strain gauge [2]. The tensometers RL 120/20 (k=2.15) were fixed to the elements under investigation with the chemo-hardening glue. The measuring and compensational tensometers were connected with the Hottinger electric bridge UPM 60 by the 20 m long ekranized cables. Fig 1b. shows the topology and numbering of the tensometers. There were two cycles of analysis with the lifting of the bridge between, made by the weather permitting.

## 3. THE IDENTIFICATION OF THE DRAWBRIDGE ELASTIC SUPPORT

Identification is understood as a procedure aimed at creating the system structure and parameters of its mathematical description which lead to the formulation of a mathematical model based on the data concerning the response of the system to a certain input signal [1,3]. The paper analysis the parametric identification method for static characteristic of a structure. The best possible mathematical model in a sense of some known parameters leads to the functional minimum:

$$J = J[e(\mathbf{x})] = J[y - y(\mathbf{x})] = \sum_{i=1}^{n} [y_i - y_i(\mathbf{x})]^2, \tag{1}$$

where $\mathbf{x} = [x_1, \ldots, x_n]^T$ vector of parameters under consideration, $e(\mathbf{x})$ acceptance deviation of model equation, a difference between input values measured $y_i$ and the corresponding computational model response $y_i(\mathbf{x})$.

The choice of the criterion of compatibility between mathematical model and real object seems to be the basic element of identification problem solution by eq. (1). In this paper the classical criterion of least squares method is taken under consideration.

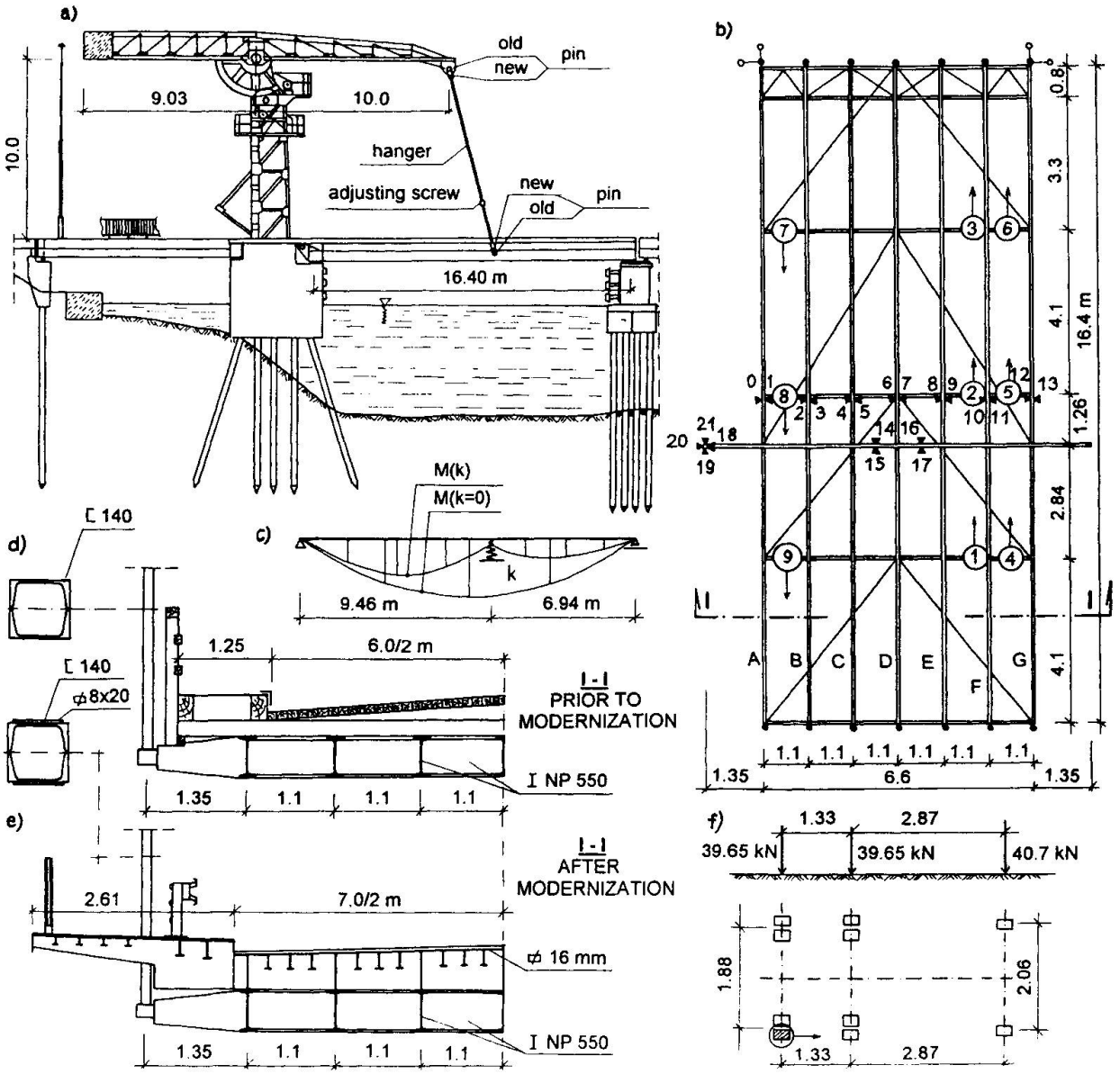


*Fig. 1 Bridge construction scheme prior to modernization and after modernization*

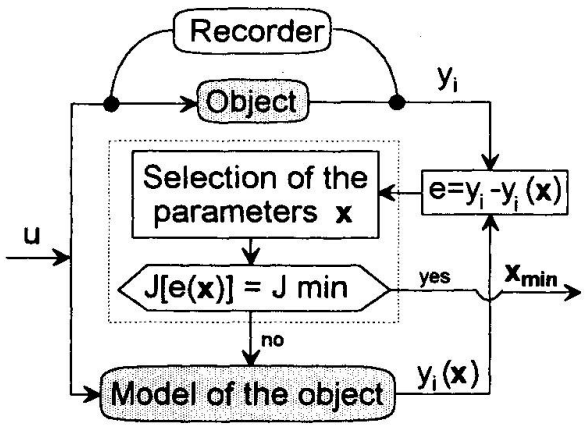


*Fig. 2 The identification procedure algorithm*

The identification process goes as follow (fig.2):

- recording the input signal u (experimental load) and output signal $y_i$ (displacements, stresses),
- creating the structure model in which changes of the structure parameters identified **x** are possible within a feasible region,
- comparing the registered signals $y_i$ and the corresponding model inputs $y_i(\mathbf{x})$ computed theoretically,
- selecting the identification variables **x**, to have the deviation error equal 0 or minimum in the sense of the criterion under account.

During the tests it came out, that the turning off the lifting gear with the span being lowered ca. 1 m over the stationary support was creating

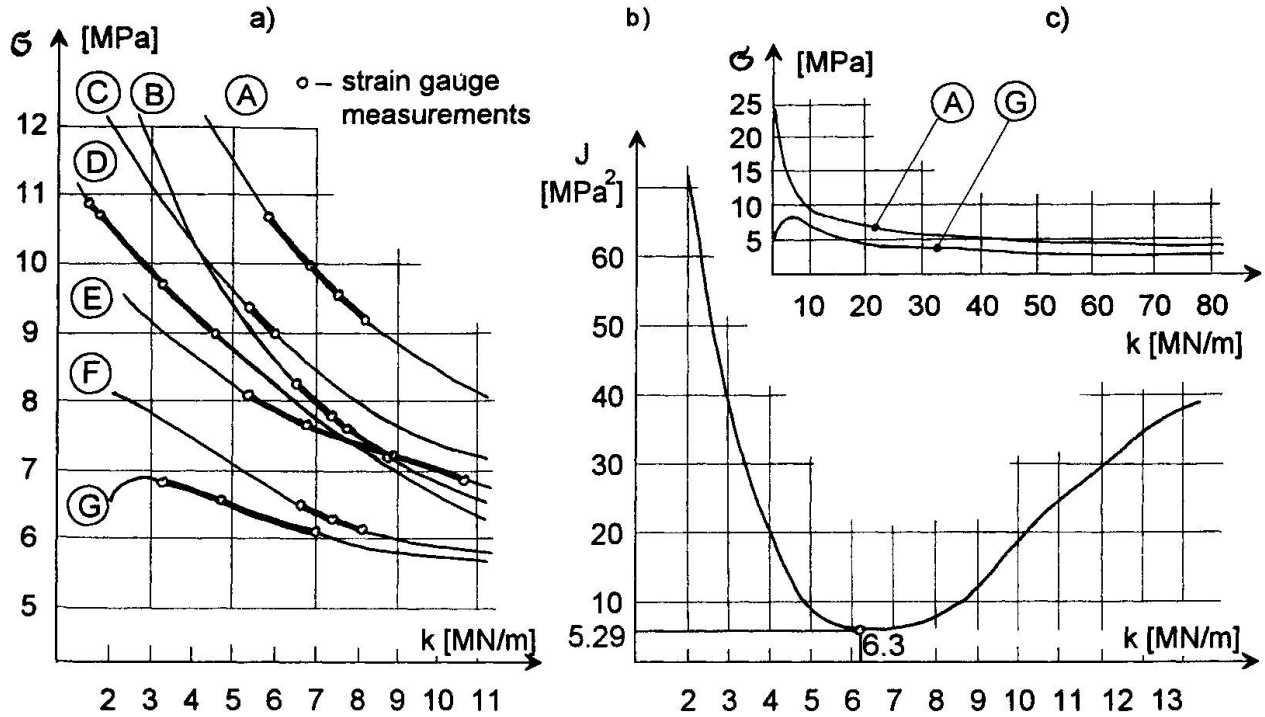


*Fig. 3 Stresses in the main beams (a, c) and the deviation function e(k) (b)*

the elastic support in the line of the hangers. The parameter k of that support was taken as one of **x**-parameters and was identified by the identification analysis. The static calculation by STRAINS-system [4] involved a grid model of a bridge. Fig. 3a shows stresses in main beam cross-sections in which were fixed tensometers. The stresses were defined within the whole range of k-values $k \in <0, \infty)$.Certain curves representing stresses were supplemented with values of measurements provided that the deviation e =0. That makes possible to define a narrow range of the identified factor variation $k \in <2, 11\ MN/m>$. The identification analysis looks for such an elastic factor $\hat{k}$ which gives a minimum of a J(k) over a set X

$$J(\hat{k}) = \max_{k \in X} \sum_{i=0}^{21} [e_i(k)]^2 = \max_{k \in X} \sum_{i=0}^{21} [\sigma_i - \sigma_i(k)]^2, \qquad X = \{k : 2 \le k \le 11\ MN/m\}, \qquad (2)$$

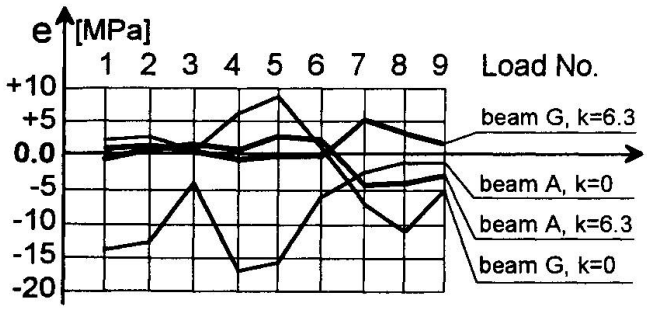


*Fig. 4 The differences between theoretical and existing stresses*

where

$\sigma_i$ - stresses at measuring section, obtained by tensometric analysis,

$\sigma_i(k)$ - stresses of the same section received theoretically.

The elastic factor k, that minimize function (2) was evaluated by the controlled enumeration method. Fig. 3b shows the function J(k). For the optimal k = 6.3 MN/m and k =0 (no support) there were the differences of stresses both the theoretical and measured ones evaluated for two side beams A and G with 9 load sets (fig. 4).

## 4. THE ANALYSIS OF HANGERS DURING MODERNIZATION

There were evaluated the increments of normal stresses in hangers during the lowering process of the span without the deck. The span was risen with hydraulic jacks set on the bearing top plate. The measure points were set on the cross-section plane to main axis (fig.5).

The used strain gauge set lets to determine in an analysed cross-section, normal forces and bending moments. For the stresses from the set of a dozen or so both rising and lowering of a span there were stresses P and moments $M_x$, $M_y$ computed. The results shows table 1.

| BN - bridge with no deck<br>W - without adjusting by a screw<br>A - after adjusting | Left hanger | | | | | | | Right hanger | | | | | | |
|---|---|---|---|---|---|---|---|---|---|---|---|---|---|---|
| | $\sigma_P$ | $\sigma_{Mx}$ | $\sigma_{My}$ | $\sigma_{max}$ | P | $M_x$ | $M_y$ | $\sigma_P$ | $\sigma_{Mx}$ | $\sigma_{My}$ | $\sigma_{max}$ | P | $M_x$ | $M_y$ |
| | MPa | | | | kN | kNcm | | MPa | | | | kN | kNcm | |
| BN W | 21.5 | 15.5 | 9.5 | 46.5 | 129 | 376 | 195 | 33.5 | 20.5 | 15.5 | 69.5 | 201 | 497 | 319 |
| BN A | 23.7 | 23 | 13.5 | 60.2 | 142 | 558 | 278 | 23.7 | 16.5 | 6 | 46.2 | 142 | 400 | 123 |
| Phase I | 63.9 | 11 | 1 | 79 | 383 | 267 | 21 | 56.4 | 12.8 | 10 | 78.5 | 338 | 309 | 206 |
| Phase II | 1.8 | 1 | 1.5 | 3.5 | 10 | 24 | 31 | 2.5 | 1.5 | 4.5 | 8.5 | 15 | 36 | 92 |

*Table 1. Stresses and forces in hangers*

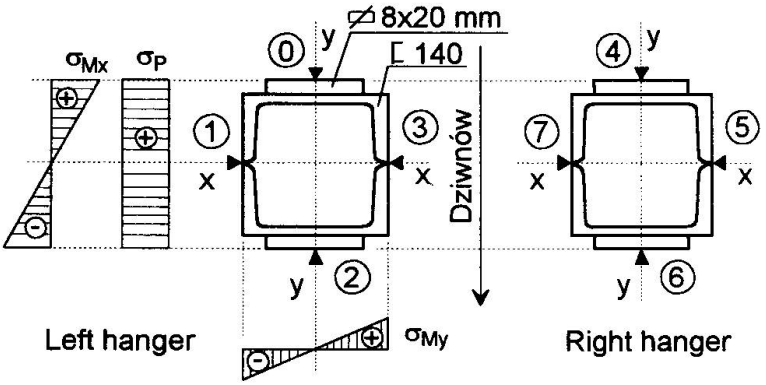


*Fig. 5 The set of tensometers and stresses in hangers*

The results show the existence of greater bending influence for left hanger. The displacement of rotary planes for left and right hangers were respectively 60 mm and 20 mm. The bending existing in the rotation plane shows the lack of free rotation in the bearing. From the set of data in table 1 it may be concluded that the lack of a free rotation in the hangers bearing increases the stresses up to 100% comparing to the stresses from the normal force. And the total stress of normal forces and two-dimensional moments, measured in cross section corner is increased by 150%.

The additional stresses being the result of a hanger bending equal $\sigma_M = 6EJ_y\Delta/w_yL^2 = 52$MPa. The computational and analytical results shows, that the hanger's stresses of 70 MPa, rise to $2.5 \bullet 70 + 52 = 227$ MPa because of bending and assembly imperfections. The connecting of the span and the hanger was decided to be remodelled. There were two additional joints put to guarantee a free rotary according to y-axis. The above-mentioned solution released the axis fixing being a result of some friction of pins and some prebending during the assembly.

## 5. THE ANALYSIS OF HANGERS AFTER MODERNIZATION

After the modernization three phases of tensometric analysis were set. They involved (for hangers):

- in phase 1 stresses from the increased load of span with deck,
- in phase 2 analysis of the rising, lowering and trial loading influences,
- in phase 3 stresses in dynamical states being a result of lowering and rising and also of moving the load.

The tensometric bridges UPM 60 go for static, and DMC 9012 for dynamic measurements were used [2]. The hanger's cross sections were chosen behind the additional bearings ca 30 cm over road surface (fig. 5). In the phase 1 the stresses after the hanger's regulation and setting were measured. The counterbalance was supported on a scaffold. The deck was rised by hydraulic jacks to a level of 60 cm. The counterbalance moved up ca 20 cm after the lowering of the span. Table 1 shows the greatest stresses noted before the total lowering of a span. The mean stresses measured in the left hanger were 64 MPa, and in the right one 57 MPa. It comes to a force of 383 kN and 338 kN respectively. A little of bending ca 10 MPa existed in hangers too.

The trial load for phase 2 consisted of two tipper tracks of A=288 kN and B= 271 kN live load respectively. When the resultant load of a rear axis of a truck follows the line of the jointed connection of a span and hanger, the maximum force in a hanger can be measured. For the trucks put in the middle line of a bridge, to the left and right pavement line, and parallel to each other there were the statical measurements done. Those measurements were done by some and none gear clearances. The dynamic measurements were done by the truck A moving with the speed of 20, 40, 60 kN/h, and by lifting and lowering of a span with rapid braking.

The live load has no meaning concerning the hanger's stresses, no matter where put, and no matter how big it can be. The additional stresses they result are no more than 3 MPa. It is the

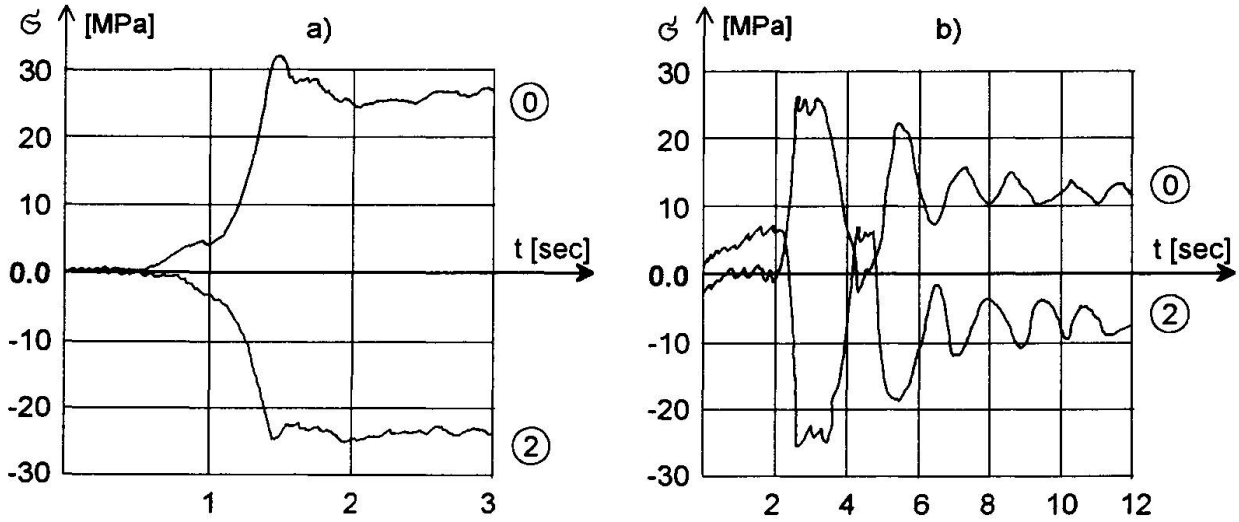


*Fig. 6 The results of the dynamic analysis*
*a) when rising, b) when lowering and braking of a span*

result of some additional joints between span and hangers added and the properly balance counterweight the bigger stiffness of a drawspan after modernization can help too.

The lifting and lowering of the span are resulting in some additional hanger's forces i.e. 15 kN by static and 24 kN by dynamic move. It gives respectively 2.5 MPa (table 1) and 4.0 MPa. The important phase of raising or braking results in bending moments in a rotary plane of a span. The additional stress caused by above mentioned action equals 31 MPa. The stresses versus time plots when lifting or lowering the span for tensometers 0 and 2 are shown on Fig. 6.

## 6. FINAL NOTES

The tensometric measurements of a real structure is a very useful base for the verification of the real work of some elements. The real object is always more complex than its mathematical model. The identification procedure seems to be a proper tool for the verification of some structures behaviour parameters and some still ignored parameters because of the lack of information.

The analysis of a bridge had permitted a limited exploatation in the years of 80-ies. It shoved the need for reconstruction in 1990-94 and was a base for a proper geodetic rectification of hanger's and for proper loading of a drawspan counterweight.

## REFERENCES

1. Dorobczyński J., Niczyj J., Paczkowski W. M., Application of identification to the determination of design model parameters of bridge structures. Enging.Transactions, Polish Academy of Sciences, Vol. 39, No. 3-4, 1991, pp.419-435.
2. Hoffmann K., An introduction to measurements using strain gauges. Hottinger Baldwin Messtechnik GmbH, Darmstadt, Germany, 1991.
3. Mańczak K., Nahorski Z., Computer identification of dynamic objects. [in Polish], PWN, Warsaw, Poland, 1983.
4. Gryszkiewicz M., User manual of mikro-STRAINS system. [in Polsh], Percomp, Warsaw, 1983