**Zeitschrift:** IABSE reports = Rapports AIPC = IVBH Berichte

**Band:** 73/1/73/2 (1995)

**Rubrik:** Session E1: Assessment of bridges II

**Nutzungsbedingungen**

Die ETH-Bibliothek ist die Anbieterin der digitalisierten Zeitschriften auf E-Periodica. Sie besitzt keine Urheberrechte an den Zeitschriften und ist nicht verantwortlich für deren Inhalte. Die Rechte liegen in der Regel bei den Herausgebern beziehungsweise den externen Rechteinhabern. Das Veröffentlichen von Bildern in Print- und Online-Publikationen sowie auf Social Media-Kanälen oder Webseiten ist nur mit vorheriger Genehmigung der Rechteinhaber erlaubt. Mehr erfahren

**Conditions d'utilisation**

L'ETH Library est le fournisseur des revues numérisées. Elle ne détient aucun droit d'auteur sur les revues et n'est pas responsable de leur contenu. En règle générale, les droits sont détenus par les éditeurs ou les détenteurs de droits externes. La reproduction d'images dans des publications imprimées ou en ligne ainsi que sur des canaux de médias sociaux ou des sites web n'est autorisée qu'avec l'accord préalable des détenteurs des droits. En savoir plus

**Terms of use**

The ETH Library is the provider of the digitised journals. It does not own any copyrights to the journals and is not responsible for their content. The rights usually lie with the publishers or the external rights holders. Publishing images in print and online publications, as well as on social media channels or websites, is only permitted with the prior consent of the rights holders. Find out more

**Download PDF:** 22.10.2025

**ETH-Bibliothek Zürich, E-Periodica, https://www.e-periodica.ch**

Session E1

# Assessment of Bridges II
# Evaluation des ponts II
# Zustandsbeurteilung im Brückenbau II

Leere Seite
Blank page
Page vide

# Debris Forces and Impact on Highway Bridges

## Forces et impact des débris sur les ponts routiers

## Trümmerlasten und Stosskräfte auf Autobahnbrücken

**Thomas E. FENSKE**
Associate Professor
University of Louisville
Louisville, KY, USA

Thomas Fenske's research interests lie primarily in the areas of computational mechanics, structural dynamics, and computer-aided structural analysis and design. He received his Ph.D. degree in civil engineering in 1986 from Purdue University.

**Colin J. APELT**
Professor
University of Queensland
Brisbane, Australia

Colin Apelt has an extensive background in experimental and applied hydraulics, particularly on the topic of the effect of fluid flow and hydrodynamic forces on obstructions in waterways. He was a Rhodes Scholar at Oxford University, where he received his Ph.D. in 1957.

**Arthur C. PAROLA**
Assistant Professor
University of Louisville
Louisville, KY, USA

Arthur Parola's research interests have focused primarily on the study of fluid flow and scour and their effect on waterway obstructions such as bridge piers. Dr. Parola received his Ph.D. degree in civil eng. from the Pennsylvania State University in 1990.

**SUMMARY**

Flooding events are the most frequent cause of bridge failure/damage in the United States. During a flooding event, highway bridges submerged in floodwaters are subjected to hydrodynamic forces created by floating debris that accumulate on structures, and impact forces caused by floating debris. This paper presents an overview of the magnitude and distribution of these debris-related forces, determined from a combination of laboratory and analytical studies. The result of this study will be a proposed design specification that will safeguard against bridge failures due to debris loading.

**RÉSUMÉ**

Les inondations sont aux États-Unis la cause la plus fréquente de la ruine et de dommages aux ponts. Lors d'une inondation, les ponts routiers submergés par les eaux sont sujets à des forces hydrodynamiques créées par des débris flottants qui s'accumule sur les structures et par des forces d'impact causées par ces débris. L'article passe en revue l'importance et la distribution de ces forces de débris déterminées par une combinaison d'études en laboratoire et théoriques. Il résultera de cette étude une proposition de normes de projet, qui protégera les ponts de la rupture du haut charge de débris.

**ZUSAMMENFASSUNG**

Ueberflutungsereignisse sind der häufigste Grund für die Beschädigung und den Einsturz von Brücken in den Vereinigten Staaten. Bei Ueberflutung sind die eingetauchten Brükken durch hydrodynamische Kräfte infolge des sich stauenden Treibguts ausgesetzt. Der Beitrag gibt einen Ueberblick über die Grösse und Verteilung solcher Kräfte, wie sie aus Laborversuchen und Berechnungen ermittelt wurden. Als Ergebnis wird ein Bemessungskriterium vorgeschlagen, das den Einsturz von Brücken unter Trümmerlasten ausschliesst.

## 1. INTRODUCTION

Recent bridge failures have occurred throughout the United States due to flooding and have resulted in loss of life as well as significant economic cost. According to the Federal Emergency Management Agency (FEMA), of all man-made and natural hazards (earthquake, tornado, fire, etc.), flooding events cause more economic and financial loss than any other hazard (FEMA, 1991; Trent, 1993). In particular, flooding events are the most frequent cause of bridge failure in the United States (Trent, 1993).

Debris can damage bridges by individual pieces of debris or debris mats colliding with structural components. These debris forces generally, but not invariably, cause only superficial damage such as spalling of concrete from piers or fascia girders. On the other hand, the forces of water on the bridge due to the river/stream flow and debris accumulation, which are termed hydrodynamic and hydrostatic forces, have resulted in some devastating failures. These hydrodynamic and hydrostatic debris forces can be sufficient to overturn bridges, shear bridge roadway decks off their supports, or cause buckling failure of the substructure. Pivotal questions still remain regarding the failure of these systems during flooding conditions, and only limited information exists regarding the precise modes of bridge failure caused by hydrodynamic loads and the magnitude and distribution of debris loading. The existence of debris forces has been realized for many years, and the American Association of State Highway and Transportation Officials (AASHTO) Standard Specification for Highway Bridges (1990), Section 3.18, has stated that this condition must be considered in bridge analysis and design. Although the AASHTO specification provides detailed criteria for evaluating maximum expected loads for stream flow, floating ice, and wind, it provides no guidance in evaluating debris loadings.

This paper presents the current efforts in developing a design specification for debris loading. The information presented is some of the preliminary findings being used to developed a practical method for estimating maximum bridge debris loads, including the probable locations and effective size. A finalized design specification is tentatively due from AASHTO in the spring of 1996.

## 2. HISTORICAL BACKGROUND AND FIELD OBSERVATIONS ON DEBRIS LOADING

### 2.1. Field Observations

Debris can be defined as anything that floats and may find its way into a waterway. However, debris primarily consists of woody remains of trees, brush and grass. The mechanics of debris formulation have not been extensively examined, although it is believed that debris is principal formed by erosions of support of roots of trees along waterway embankments. During flooding events, debris that is lodged on the banks of the waterway will be swept into the waterway as the flow depth increases. The debris and logs that lie along the stream banks may also be dislodged by the secondary currents that exist in the turbulent water at the stream's bank.

The formulation of debris piles is dependent upon the individual log sizes, waterway height, distance between bridge piers and/or the waterway embankment. The typical formation of debris piles appears to be that a single large tree becomes pinned between the pier and the streambed or the deck and a pier. Thus, the shorter span and shorter height bridges will be more susceptible to debris accumulation. The debris accumulation region acts like a sieve that progressively traps smaller and smaller debris until leaves and grass effectively clogging

the openings so as to allow it to be considered impervious. A typical bridge upstream edge debris accumulation is shown in Figure 1. From examination of the photographs, it is observed that the debris accumulation effectively constricts the flow area, resulting in an increased flow velocity and possible aggravated scour condition. At several locations, islands have been observed, which are thought to have developed as a result of settlement of suspended soil when the flow velocity decreases past the constricted channel opening. In addition, as the upstream debris accumulation grows larger, the accumulated debris takes on an inverted conic shape and produces a slip-stream, resulting in a reduced force on the projected debris area.

Figure 1. Typical Upstream Debris Accumulation

## 2.2. Historical Background

Debris forces apply basically to non-navigable waterways, since ship/barge collisions will control lateral loading in navigable waterways. Although the main thrust of bridge failure investigation to date has focussed on ship/bridge collisions in navigable waterways, a few investigations have been conducted on bridge failures at non-navigable waterway sites. A Federal Highway Administration (FHWA) survey of bridges subjected to a major flooding event (O'Donnell 1973) found that the roadway decks of several bridges throughout New York and Pennsylvania had separated from their supporting substructures. These failures were attributed to shear at the connection between the bridge superstructure and substructure, i.e., at bearing devices. FHWA concluded that these bearing devices need to "....be designed to resist dynamic flood forces, such as the horizontal forces due to impacting debris". In a report to FHWA, Chang and Shen (1979) reported that the most frequent cause of damage to bridges is related to debris accumulation.

# 3. HIGHWAY BRIDGE DEBRIS FORCES

During a flooding event, the total hydrodynamic force on a bridge is the sum of all pressure forces on the bridge surface created by water and the force transmitted by lodged debris from water. The total force system, excluding impact, consists of 1) hydrodynamic drag forces, 2) hydrostatic forces, 3) buoyant forces, and 4) hydrodynamic lift forces. Although these forces fluctuate with vortex shedding and wave propagation, computation of mean forces is sufficient to determine debris related bridge forces. Additionally, impact forces will develop from floating debris colliding with bridge substructures. The impact force on a bridge during debris collision is influenced by the drag force on the debris, the deceleration of the debris mass, the hydrodynamic effect of deceleration of fluid particles permanently displaced by the debris

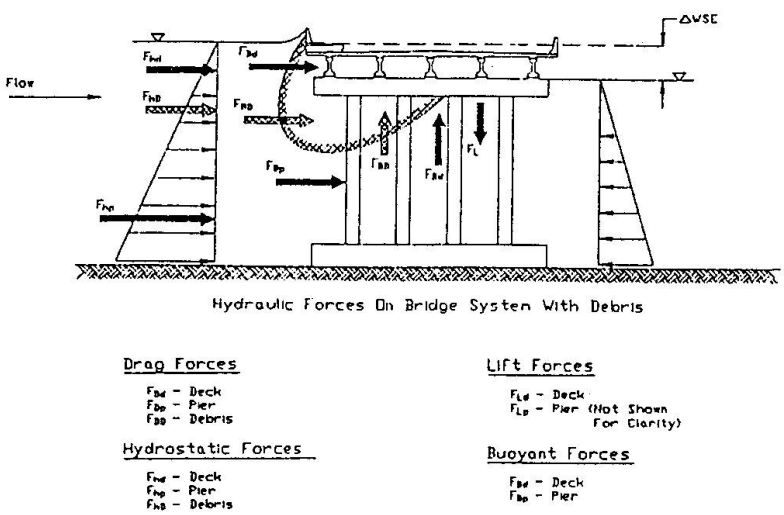


Figure 2. Hydrodynamic Bridge Loads

mass, i.e., the "added mass" effect, and the fluid-structure mass, damping and stiffness. The hydrodynamic and hydrostatic bridge forces that occur during a flooding event are illustrated in Figure 2.

## 4. DEBRIS FORCE MODELS

### 4.1. Hydrodynamic Drag Model

Hydrodynamic drag is the net force resulting from boundary layer pressure drag (form drag) and viscous drag. Bridge elements are hydrodynamically bluff and predominantly cause pressure drag. Although the drag forces fluctuate with vortex shedding, computation of the mean force is sufficient for determination of bridge drag forces due to the high natural frequency and high dampening of bridges. Drag forces on the projected area of the structure may be computed using the following proposed analytical drag model:

$$F_D = C_D \ \rho A \frac{V^2}{2}$$

where A equals the reference area for computing the drag coefficient, ρ equals the fluid density, V equals the reference velocity, and $C_D$ equals the drag coefficient. The velocity required in the proposed design equation can be computed using a reasonable estimate of the horizontal and vertical velocity distribution.

### 4.2. Dynamic Impact Model

Impact can be defined, in a general manner, as "the collision between two or more objects". Floating debris or ice, shipping traffic, and recreational boats may collide with the bridge substructure in the case of a bridge over a waterway,. This collision can cause substantial damage or even catastrophic collapse. The proposed impact force model is:

$$F_i(t) = CF\left(\frac{MV^2}{S}\right)$$

where Fi(t) equals the impact force, M equals the effective mass of the debris, V equals the velocity of debris at level of impact, S equals the stopping distance, and Cf equals the correction factor accounting for variation of stiffness of the bridge, relative angle of impact, fluid damping and mass. The stopping distance is controlled by the bridge lateral stiffness,

effective design mass, effective fluid-structure damping and mass, the flow velocity and the localized failure mechanism of a particular debris (wood) type.

### 4.3. Additional Force Models

In addition to the hydrostatic pressure forces, drag and impact forces, buoyant and lift forces may also be significant forces on the bridge structure. Hydrostatic forces on bridge elements result from differences in water surface elevation between the upstream and downstream sides of a bridge caused by significant flow constriction of the waterway opening and related energy dissipation. Buoyant force acts vertically upward and results from the displacement of water by bridge elements and debris lodged under the bridge. Hydrodynamic lift is the force perpendicular to the flow direction. Lift forces can develop in a vertical direction for bridge decks that are partially or fully submerged. The direction of the lift force on the deck is downward. Lift forces tend to be greatest under partially submerged conditions.

## 5. EXPERIMENTAL TESTING RESULTS

Experimental testing has been conducted using small-scale, medium-scale, and full scale testing model. The small-scale testing was conducted at the Queensland University using 1/25 scale models. The medium scale testing was conducted at the Waterways Experiment Station, Vicksburg, Mississippi, at approximate 1/10 scale. The full-scale impact testing was conducted at Hodgensville, NY. The debris was modelled using either flat plate models, conic section with protrusions, or proportional debris elements which were allowed to accumulate on the bridge models.

Four superstructure models and three substructure models were examined. The bridge models selected to be experimentally investigated represent bridge systems that would reasonably be expected to be subjected to debris loading. The superstructure models consisted of AASHTO Type IV prestressed concrete girders, steel girders with composite decks, and both adjacent and spread prestressed concrete box girders. The substructure models included two-column piers (round and tied), solid piers, and four column bents . A partial illustration of the bridge models is shown in Figure 3.

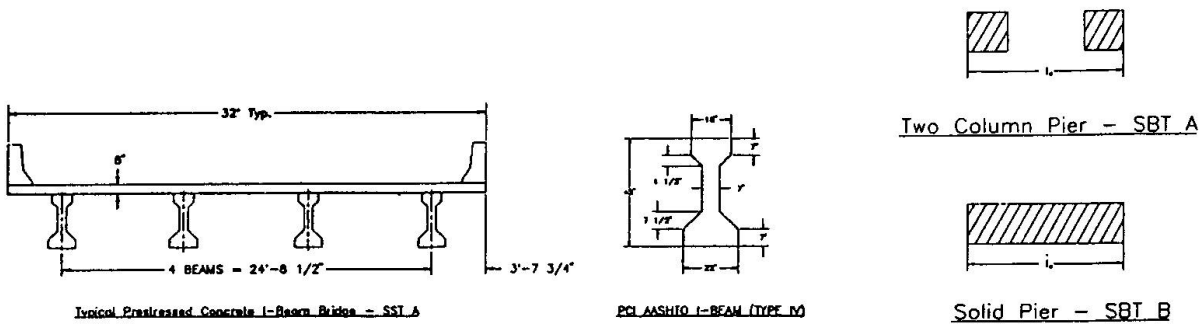


Figure 3. Partial Bridge Superstructure and Substructure Model

Graphical displays of part of the testing results are given in Figures 4 and 5. Comparing the maximum theoretical value for a flat plate model, and the conic section results, it is apparent that the slip stream effect does have an impact on the magnitude of the debris loads. From field observations and experimental testing, it is realized that the actual debris loading is significantly less than that which would be generated when considering the flat plate model.

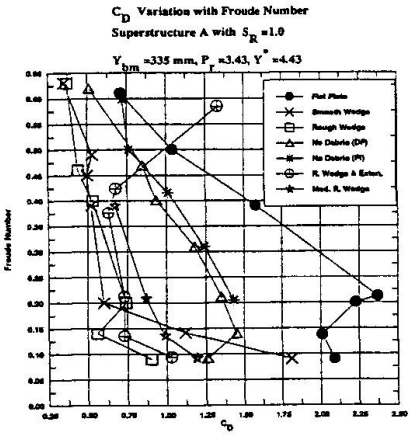


Figure 4. Superstructure A

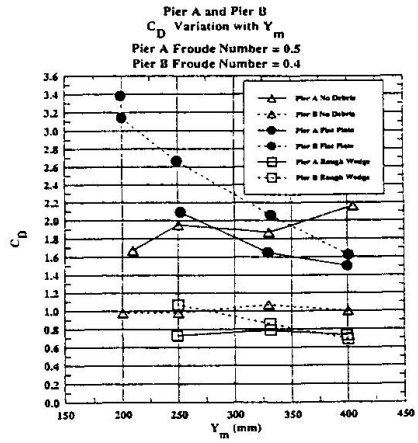


Figure 5. Substructure A and B

## 7. CONCLUSIONS

Debris loading occurs on all waterways systems with bridges with short spans and/or low heights being more susceptible to debris loading influence.. The results presented here are the first effort in classifying and quantifying these loads. This loading information will be developed into an AASHTO debris specification.

## 8. ACKNOWLEDGMENT

This research has been sponsored by the National Cooperative Highway Research Program, Project 12-39, "Design Specifications for Debris loading". Additional support has been provided through the National Science Foundation Grant No. BCS9322507.

## REFERENCES

1. CHANG F. F. M. and SHEN H. W., "Debris Problems in River Environments," Federal Highway Administration Report No. FHWA-RD-79-62, 1979.

2. FEDERAL EMERGENCY MANAGEMENT AGENCY, DMIS Reports 2.4 and 2.5, Disaster Assistance, May, 1991.

3. NATIONAL TRANSPORTATION SAFETY BOARD, "Highway Accident Report --- Collapse of the Harrison Road Bridge Spans, Miamistown. Ohio, May 26, 1989", 1989.

4. O'DONNELL, C. L., "Observation on the Causes of Bridge Damage in Pennsylvania and New York Due to Hurricane Agnes," Highway Research Record, No. 479, 1973, pp. 423-442.

5. TRENT, R., "Economics of Flood, Scour, and Bridge Failures," Journal of the Hydraulics Division, American Society of Civil Engineers, Vol. 1, 1993, pp. 928-933.

# Measurements for Evaluating the Remaining Service Life of a Riveted Bridge

## Mesures in-situ pour l'évaluation de la durée de service restante d'un pont riveté

## Messungen für die Beurteilung der Restnutzungsdauer einer genieteten Brücke

**Eugen BRÜHWILER**
Professor
Swiss Federal Inst. of Technology
Lausanne, Switzerland

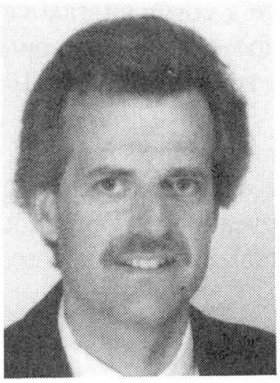

Eugen Brühwiler, born 1958, received his civil engineering and doctoral degrees from the Swiss Federal Institutes of Technology (ETH) in Zurich and Lausanne. After a post-doctoral stay at the University of Colorado, Boulder, CO, USA, he worked for four years with the Swiss Federal Railways. Since 1995, he is professor at ETH Lausanne.

**SUMMARY**

Accurate determination of stresses due to actual traffic loads is important when assessing the fatigue safety and the remaining service life of bridges. A 100-year-old riveted bridge carrying a busy railway line is investigated by in-situ measurements of the fatigue-determinant cross girders. This thorough assessment is cost-effective because no expensive measures had to be taken to keep the bridge in service.

**RÉSUMÉ**

Une détermination précise des contraintes dues aux charges de trafic actuelles est importante dans l'évaluation de la sécurité à la fatigue et de la durée de vie restante des ponts. Un pont-rail riveté, construit il y a 100 ans et faisant l'objet d'un trafic intense, est évalué à l'aide de mesures in-situ sur des entretoises. Cette évaluation détaillée s'est avérée avantageuse car on a pu renoncer à des interventions coûteuses pour maintenir le pont en service.

**ZUSAMMENFASSUNG**

Eine genaue Spannungsermittlung infolge wirklicher Verkehrslasten ist wichtig bei der Beurteilung der Ermüdungssicherheit und der Restnutzungsdauer von Brücken. Eine 100 Jahre alte genietete Brücke, welche einem starken Bahnverkehr ausgesetzt ist, wird mit Hilfe von Spannungsmessungen in den für die Ermüdung massgebenden Querträgern untersucht. Diese umfassende Beurteilung ist kostengünstig, weil keine teuren Massnahmen notwendig sind, um die Brücke weiterhin in Betrieb zu halten.

## 1. INTRODUCTION

The remaining service life of eight consecutive railway bridges of identical construction has been investigated. The bridges were built in 1894 and comprise riveted early mild steel members. The lattice-truss structure of a single 34m-span has a ballasted deck consisting of a reinforced concrete slab on corrugated steel resting on the cross girders (Figure 1). These girders are rigidly connected to the main girders; i.e. the cross section of the bridge is an U-frame. Since commencement of service 100 years ago, these single-track bridges have been subjected to a busy railway traffic totalling 3.6 million trains. Today the daily traffic is 150 passenger trains, and it is planned to maintain this traffic in the future.

In general, it is economical to keep well maintained bridges in service as long as possible. In the present case, bridge replacement would be a costly alternative because it is not feasible to interrupt railway service on this busy main line for more than some hours. Given the good structural condition, the owner decided to assess the remaining service life of the 100-year-old bridges.

A first structural analysis using simple statical models revealed sufficient load carrying capacity of the bridge. However, the fatigue safety check depicted the cross girders to be fatigue critical to such an extent that they should have failed many years ago. Consequently, a more refined assessement was necessary to investigate why no fatigue crack could be detected in the cross girders up to this day.

## 2. VERIFICATION OF THE FATIGUE SAFETY

As a result of the small spacing of the cross girders, every single axle or pair of closely spaced axles induces one single stress cycle in the cross girder. Given the high number of 3.6 million past train passages, the cross girders have been - up to date - subjected to an estimated number of 70 million stress cycles. A significant portion of them is in the domain of high stress ranges.

Because of this inherent fatigue loading, the fatigue safety of the cross girders is assessed with respect to the constant amplitude fatigue limit. It is postulated that the whole stress range spectra due to actual traffic is below the fatigue limit (Fig. 2a), i.e. no fatigue crack propagation has occurred in the riveted connection. This is expressed by the following equation:

$$\Delta\sigma(\Phi \cdot Q_{eff}) < \Delta\sigma_D / \gamma_{fat} \qquad (1)$$

The maximum stress range $\Delta\sigma(\Phi \cdot Q_{eff})$ due to actual loads $Q_{eff}$ includes the dynamic coefficient $\Phi$. The constant amplitude fatigue limit $\Delta\sigma_D$ for riveted connections is deduced from experimental results as obtained from riveted bridge elements (Fig.2b) [1,2]. Detail category ECCS 71 (AASHTO D) provides a reasonable estimate of fatigue strength of mildly corroded riveted bridge members. This detail category suggests a constant-amplitude fatigue limit $\Delta\sigma_D$ of 52 MPa which is the value considered in the present study. This value is rather conservative; the test results indicate a fatigue limit of 70 MPa (Fig. 2b). Finally, a fatigue resistance factor $\gamma_{fat} = 1.20$ is taken into account.

## 3. STRUCTURAL ANALYSIS OF THE CROSS GIRDERS

The structural behaviour, under actual load conditions, has to be modeled first to determine the maximum stress range $\Delta\sigma(\Phi \cdot Q_{eff})$ in the fatigue relevant tension flange of the cross girder. In the present case, there are a few rivets fixing the deck to the cross girders. This connection between deck and cross girder may lead to some kind of partial composite action under service loading.

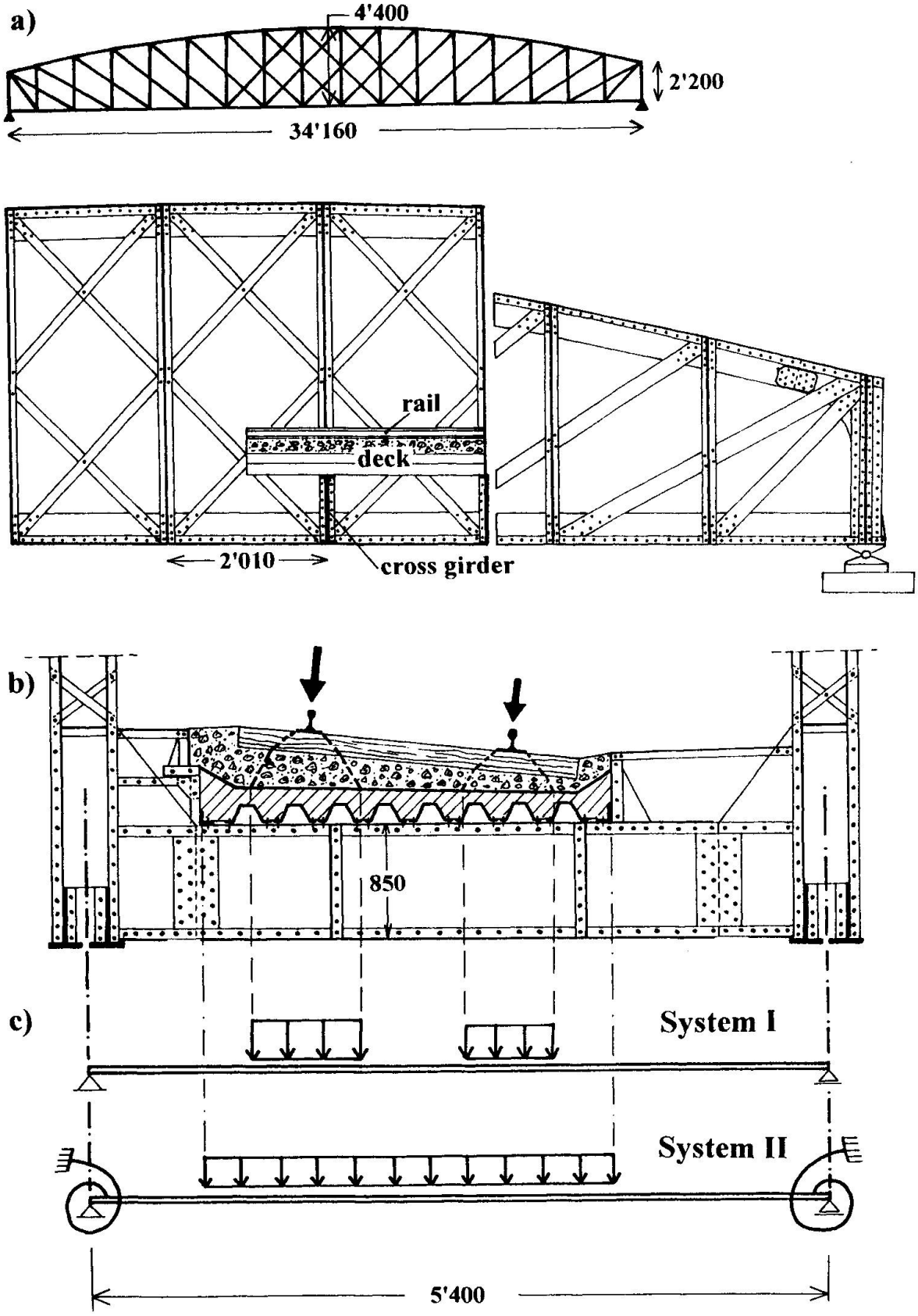


Fig. 1 Investigated bridge: a) view of the lattice girder, b) cross section, c) statical systems.

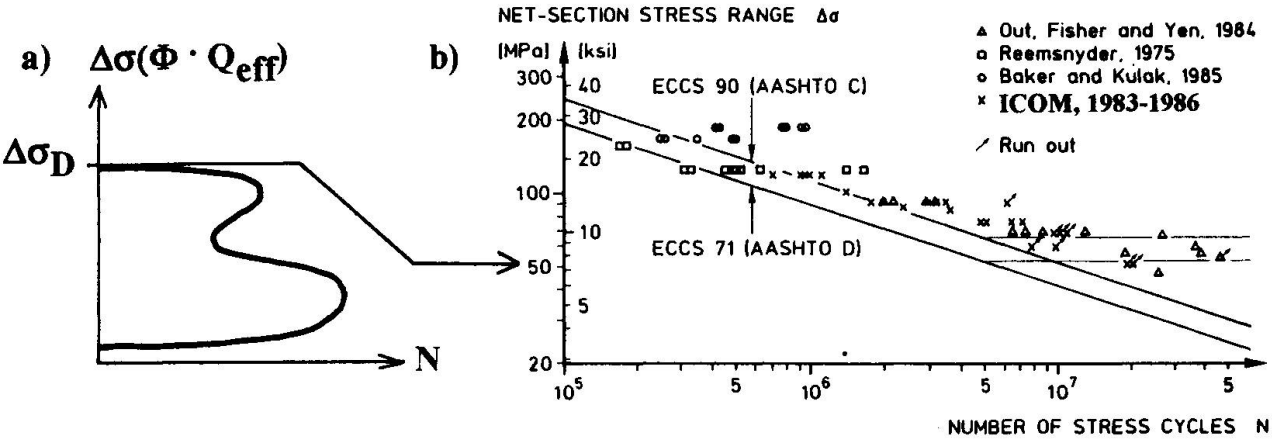


Fig. 2 a) Schematic representation of stress range spectra, b) Fatigue test results of full-scale riveted elements, from [1].

However, it is difficult to account for this partial composite action in a statical model. Also, the load distribution from the deck onto adjacent cross girders and the degree of fixity of the cross girders in the bottom flange of the two main girders are difficult to model. Finally, the actual dynamic coefficient is not known precisely. The two following structural systems have been adopted (Fig. 1c):

The **statical system I** representing a conservative approach, isolates the cross girder from the overall structural behaviour of the bridge. The statical model is a simple beam. The section modulus of the steel girder alone and a dynamic coefficient $\Phi = 1.40$ according to current codes have been considered. Loads have been distributed in the longitudinal direction assuming the cross girders to be a hard support for the deck slab.

In **statical system II**, the partial fixity of the cross girder in the bottom flange of the two main girders has been estimated according to [3]. The dynamic coefficient as given by code provisions appears to be too conservative for ballasted tracks, and a reduced $\Phi = 1.15$ has been assumed. Loads are distributed in the longitudinal direction accounting for the overall deformation of the bridge under load. No composite action between deck and girder has been considered, and the section modulus of the steel girder alone has been used to calculate the stress range.

Maximum stress range values $\Delta\sigma(\Phi \cdot Q_{eff})$ of 93 MPa and 71 MPa have been calculated assuming, respectively, the statical systems I and II. Both values are significantly above the fatigue limit $\Delta\sigma_D$, and the fatigue safety is not verified according to Eq. 1. There is still no explanation why no fatigue crack could be detected in the cross girders up to this day.

## 4. FIELD TESTING

Strain measurements have been performed in the next step to study the static and dynamic structural performance of the cross girders and to determine stresses under actual traffic loads. Three successive cross girders have been equipped with strain gauges (Fig. 3), and the stress-time histories due to passenger trains and a given engine load have been recorded (Fig. 4).

The location of the neutral axis along the cross girder is discussed first (Fig. 3). Two domains are distinguished; in the domain where the steel beam acts alone, the neutral axis is, as expected, located at mid-height of the beam. Under the deck slab, the neutral axis shows a significant shift upwards indicating a beneficial partial composite action between the deck and the cross girder.

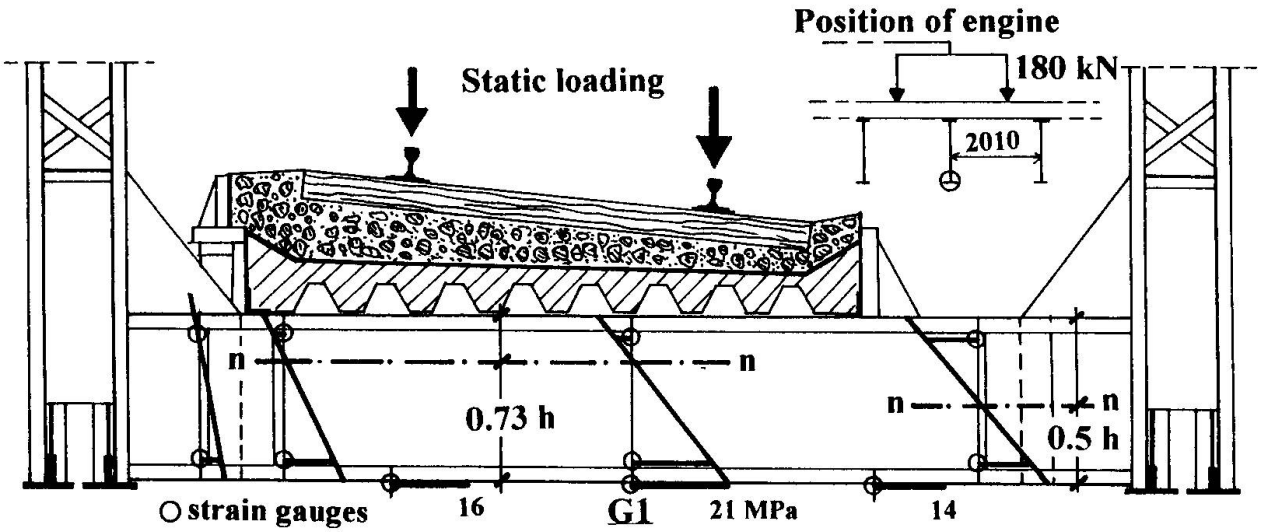


Fig. 3 Structural performance of the cross girder: in-situ measurement under static engine load.

The actual section modulus of the composite system is about 2.5 times larger than the section modulus of the steel girder alone. This explains why the measured stresses are significantly smaller than the calculated stresses.

The shear force at the interface between the upper flange of the cross girder and the deck is resisted by the few connecting rivets between deck and girder. The estimated shear stress of about 100 MPa in these rivets is high, but acceptable; it is equal to a conservative value of fatigue limit $\Delta\tau_D$ for rivets under shear stress [1].

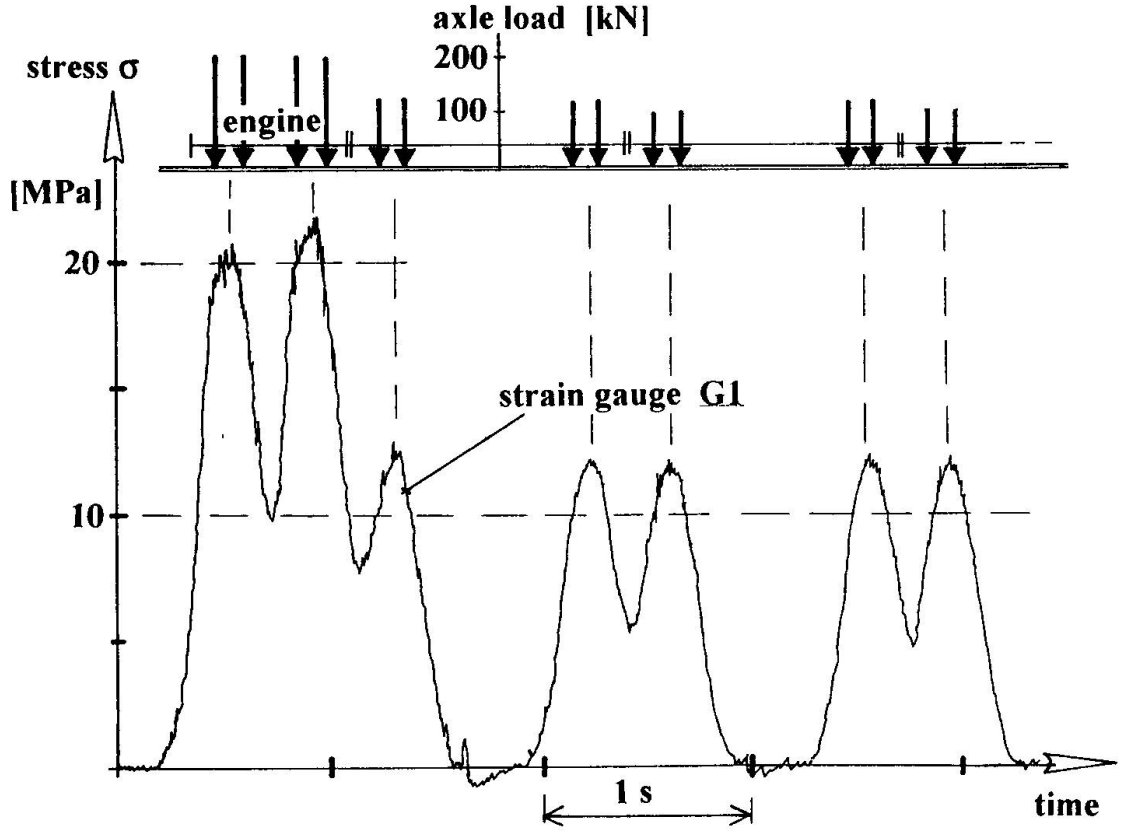


Fig. 4 Measured stress-time history in the bottom flange of the cross girder due to the passage of a passenger train. (The stress values have been deduced from the strain readings using a modulus of elasticity of 210 GPa.)

Figure 4 also indicates that the measured dynamic coefficient is small, i.e. $\Phi_{meas} = 1.05$. This is explained by the good condition of the rails and the ballast bed acting like a damper. Finally, the partial fixity of the cross girder between the two main girders is confirmed by the measurements; the distance between zero-moment locations is 85 % of the span of the cross girder.

## 5. ASSESSMENT OF FATIGUE SAFETY

The measured maximum stress range $\Delta\sigma(\Phi \cdot Q_{eff})$ under actual traffic loads (including dynamic effects) is 25 MPa. Thus, all stress ranges due to past traffic have been significantly smaller than the constant amplitude fatigue limit of 52 MPa for riveted connections. No damage has occured due to fatigue which explains why no fatigue crack could be detected up to date. In the future, there will be no increase in axle loads, and consequently, the fatigue safety for future traffic is verified according to Eq. 1. The fatigue stress range in the cross girders (and also in all other elements of the structure) is below the fatigue limit. From the point of view of fatigue, a theoretically infinite number of future passenger trains could cross the 100-year-old bridge.

In a riveted structure, there might exist crack-like defects due to the riveting process or flaws in the material. Such defects and fatigue cracks due to out-of-plane displacements are not captured by the preceding investigation. Based on the information obtained, monitoring and maintenance strategies have been developed in view of a long remaining service life of 30 or even 80 years.

## 6. CONCLUSIONS

The assessment has shown that no extraordinary measures need to be taken to keep the bridge in service for many years to come providing that the inspection and maintenance guidelines are followed. Compared to the costs for bridge strengthening or replacement, the expenditures for this thorough investigation are minor.
Accurate stress determination under actual traffic loading plays a key role in the assessment of fatigue safety of bridges. In-situ measurements under well-defined loads, allow to study the structural performance of fatigue determinant members. Compared to calculated stresses using common (and often conservative) statical systems, lower stress range values are usually determined. These values may be also needed to clarify obvious contradictions between results of first analyses and the actual in-situ condition of the structure.

## ACKNOWLEDGEMENTS
The Measurements and Instrumentation group of the Swiss Federal Railways is thanked for the carefully conducted bridge measurements.

## REFERENCES

[1] BRÜHWILER E., SMITH I.F., HIRT M.A., Fatigue and fracture of riveted bridge elements. Journal of Structural Division, ASCE, Vol. 116, No. 1, January 1990, pp. 198-214.
[2] AKESSON, B., Fatigue life of riveted railway bridges. Doctoral Thesis, Chalmers University of Technology, Göteborg, Sweden, 1994.
[3] van MAARSCHALKERWAART H.M.C.M., On the analysis of fixed-end moments of symmetrically loaded cross girders of bridges with torsion-rigid main girders. Stahlbau, No. 1, 1963, pp. 14-18. (in German)

# Assessment of a 135 Year Old Riveted Railway Bridge

## Évaluation d'un pont-rail riveté, de 135 ans

## Beurteilung einer 135 Jahre alten genieteten Eisenbahnbrücke

**Andreas KELLER**
Research Engineer
Swiss Fed. Inst. of Technology
Lausanne, Switzerland

**Eugen BRÜHWILER**
Professor
Swiss Fed. Inst. of Technology
Lausanne, Switzerland

**Manfred A. HIRT**
Professor
Swiss Fed. Inst. of Technology
Lausanne, Switzerland

Andreas Keller, born 1969, graduated from the Swiss Fedral Institute of Technology in Lausanne. At ICOM (Steel Structures) of EPF Lausanne, he is involved in fatigue research and the evaluation of the remaining service life of steel bridges.

Eugen Brühwiler, born 1958, received his civil engineering and doctoral degrees from the Swiss Fed. Inst. of Technology in Zurich and Lausanne. Post-doctoral stay at the Univ. of Colorado, Boulder, USA. Four years with the Swiss Federal Railways. Since 1995, he is Professor at EPF Lausanne.

Manfred A. Hirt, born 1942, graduated from the Swiss Federal Inst. of Technology in Zurich and received his doctorate from Lehigh Univ., Bethlehem, PA, USA. Since 1972 he has worked at ICOM (Steel Structures) of EPF Lausanne and became full professor and director of ICOM in 1993.

**SUMMARY**

This paper deals with the assessment of the remaining service life of the oldest existing wrought-iron railway bridge in continental Europe. This bridge is part of a railway line currently under investigation for future use by the Zurich suburban railway. The evaluation, based on actual loads and fracture mechanics methods, has shown that this 135 year old bridge is still safe and serviceable for many years to come.

**RÉSUMÉ**

L'article examine la durée d'utilisation restante du plus vieux pont en fer puddlé d'Europe continentale. Le pont se situe sur une ligne potentielle du réseau express régional zurichois. L'évaluation est basée sur les charges actuelles et sur la mécanique de la rupture; elle montre que ce pont d'un âge de 135 ans pourra encore être maintenu en service pendant de nombreuses années.

**ZUSAMMENFASSUNG**

Der vorliegende Bericht behandelt die Untersuchung über die Restnutzungsdauer der ältesten bestehenden schweisseisernen Brücke auf dem europäischen Festland. Die Brücke liegt auf einer Strecke, die in Zukunft von der Zürcher S-Bahn befahren werden soll. Die auf den wirklichen Bahnlasten und auf der Bruchmechanik basierende Untersuchung hat gezeigt, dass diese 135 jährige Brücke auch in Zukunft noch genutzt werden kann.

## 1. INTRODUCTION

Riveted bridges were built over a period of more than 100 years up to the 1950s. There are thousands of riveted bridges around the world still in service. Some of them are considered "historical" and should be preserved as architectural heritage. Economically, it is not justified to replace a bridge when it reaches its "design life". Often the design life is an arbitrary value and there is considerable reserve. An important remaining service life may be justified provided that corresponding inspection guidelines are followed.

This paper deals with the investigation of the oldest existing wrought-iron railway bridge in continental Europe. This bridge is part of a railway line currently being under investigation for future use by the Zurich suburban railways. The main objective of the present investigation was to evaluate the consequences of this new use for the structural safety and remaining fatigue life of this historic structure.

The assessment of the bridge was conducted by proceeding in stages (Fig. 1). A first assessment of structural and fatigue safety was performed based on current code provisions to identify critical members in the structure. The effect of actual loads of past and future rail traffic on service stresses in the structure was studied to assess the fatigue safety in the second step on the basis of the fatigue limit. Fracture mechanics methods were applied in the final step to investigate critical crack length and fatigue crack propagation and their influence with respect to failure of structural elements.

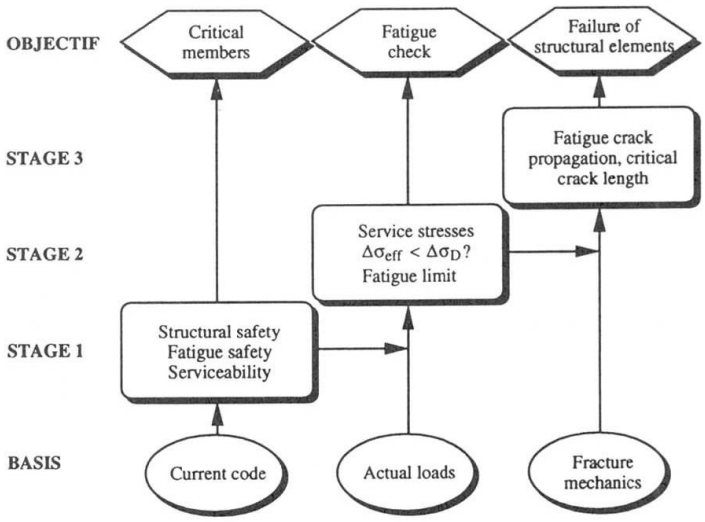


**Fig. 1 :** Assessment by proceeding in stages

## 2. DESCRIPTION OF THE BRIDGE

The investigated bridge (Fig. 2) crosses the river Rhine in northern Switzerland to carry a railway line between Koblenz (Switzerland) and Waldshut (Germany). It was built in 1859 and comprises riveted wrought iron members. The straight lattice-truss bridge is one of the last examples of a construction type that was typical for the railroad construction boom in Europe during the third quarter of the last Century.

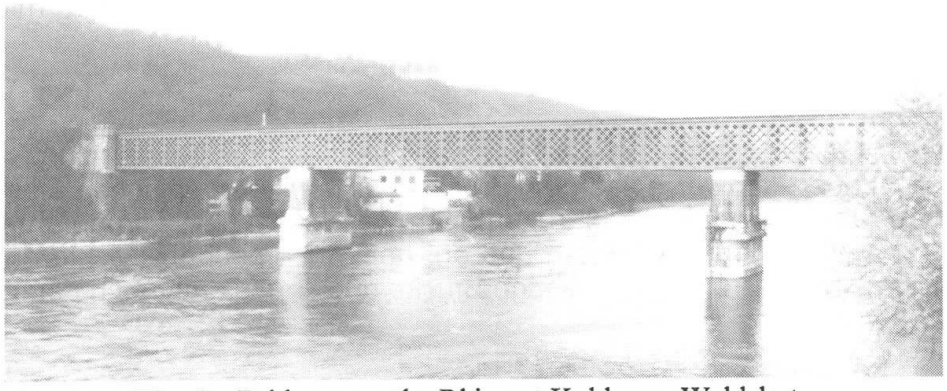

**Fig. 2 :** Bridge over the Rhine at Koblenz - Waldshut

The wrought iron structure was conceived as a continuous girder over three spans of 37.5m, 55m and 37.5m with a total length of 130m supported by abutments and piers in natural stone masonry. The single track is not ballasted; the timber sleepers are fixed directly to the stringers. The bridge

was initially designed to carry two tracks; however, it only ever carried one track. During its service life the structure was well maintained and, apart from some local corrosion, the present state of the bridge structure is good. For the excellence of its maintenance and restoration, this bridge was given in 1994 a Brunel Award which is the most important award for railway architecture.

## 3. VERIFICATION ACCORDING TO THE CURRENT CODE

The first stage (see figure 1) concerned an overall assessment according to the current codes. Firstly, structural safety was assessed at different sections of the bridge in various elements. The action effect $S_d$ was calculated using the UIC 71 model which is the rail traffic load model currently used in Europe. For wrought iron, a characteristic value of yield strength of 220 MPa is generally chosen, and for the rivets, a shear resistance of 225 MPa and an ultimate stress of 510 MPa is considered [1]. These values have to be divided by the resistance factor $\gamma_R$ of 1.20 in order to obtain the design value for resistance $R_d$. As a result, all elements were found to satisfy the requirements of structural safety. The fatigue safety of all bridge members can be represented by the following ratio $n_{fat}$ between fatigue resistance and fatigue action effect:

$$n_{fat} = \frac{\Delta\sigma_c/\gamma_{fat}}{\Delta\sigma_e}$$

The fatigue resistance $\Delta\sigma_c$ is represented by the detail category as defined at 2 million cycles. Detail category 71 with a fatigue limit of 52 MPa at $N_D = 7 \cdot 10^6$ is chosen for riveted wrought iron bridge elements [1]. For details causing local failure, the fatigue resistance factor $\gamma_{fat} = 1.15$ is considered, and for elements leading to total collapse of the structure, $\gamma_{fat}$ is 1.25.
The fatigue action is represented by the equivalent stress range $\Delta\sigma_e$:

$$\Delta\sigma_e = \alpha_r \cdot \alpha_N \cdot \Delta\sigma(\phi\, Q_{UIC})$$

The live load stress range $\Delta\sigma(\phi\, Q_{UIC})$ is the difference between the extreme values of static live load stresses due to the UIC rail traffic model including the dynamic coefficient $\phi$. The correction factor $\alpha_r$ accounts for the cumulative fatigue damage caused by the stress spectrum of actual traffic of main railway lines. The factor $\alpha_N$ accounts for the number of trains in the past [2].
The bridge members were compared, based on this deterministic method, and a ranked list identifying fatigue critical bridge details was established. Details with $n_{fat} < 1$ required further investigation, fatigue safety was assumed verified if $n_{fat} > 1$. The lowest value of 0.83 was obtained for the lower chord at section M1 of the main girders (Fig. 3). Consequently, the chord member at M1 will be more thoroughly investigated in the subsequent chapters.

## 4. FATIGUE ASSESSMENT FOR FUTURE URBAN RAIL TRAFFIC

The aim of the second stage of the assessment (see figure 1) is to compare the maximum stress range due to actual traffic loads, past and future, with the fatigue limit of riveted connections.

### 4.1 Load models for past and future traffic

The past traffic on the bridge was significantly different from normal main line traffic. There was a moderate total of only 750'000 trains crossing the bridge in the period from 1859 until today. Most of the trains were light passenger trains, but some 30'000 heavy freight trains (maximal axle load: 180 kN, maximal distributed load: 60 kN/m) also crossed the bridge. The loads of this heavy freight train were thus considered in the calculation of the maximum stress range due to the past traffic. For the future a daily traffic of 40 passenger trains is planned. To represent this traffic, the loads of today's suburban passenger trains are taken into account. Various rail traffic models were developed accordingly.

### 4.2 Calculation of stress-time histories

The passage of these traffic models was then simulated to determine stress histories. The stress-time history due to the future suburban passenger trains is given as an example for section M1 in Figure 4 showing a maximum stress range of 31 MPa. The heavy freight train representing the past traffic gave rise to a maximum stress range of 59 MPa.

The stress history in Figure 3 illustrates why section M1 is the fatigue critical location in the main girder: due to the continuous action of the main girders over three spans, the influence line for bending moments at M1 shows both tensile and compressive stresses. The resulting fatigue action in terms of stress range is thus greater than the design stress for structural safety. This fatigue relevant stress range was not considered when the main girder was designed in the last century; section M1 was designed to account for static structural safety only.

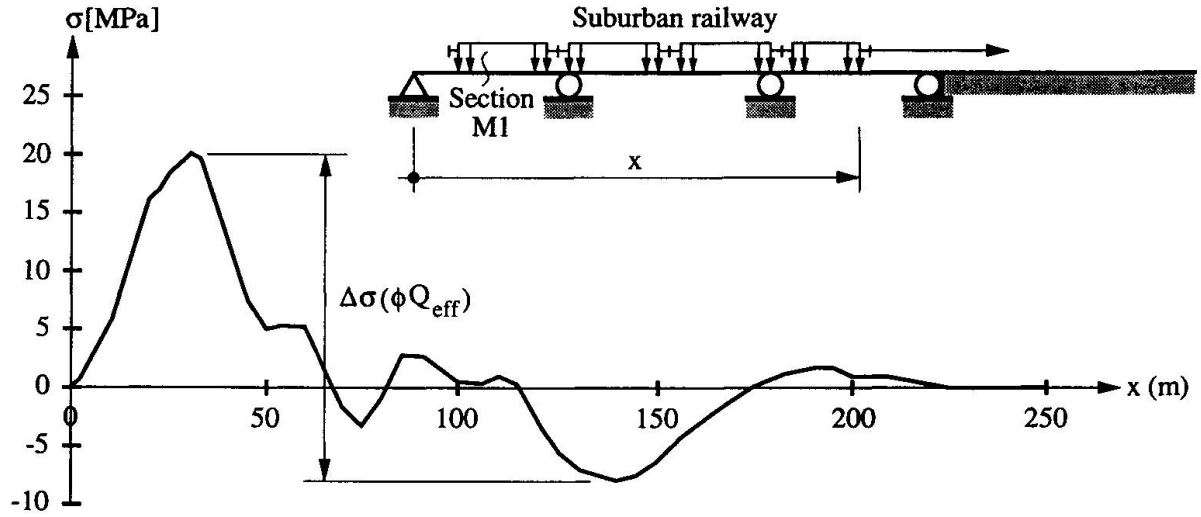


**Fig. 3 :** Simulated stress-time history due to the passage of suburban passenger trains

### 4.3 Fatigue damage due to past traffic

The simulated maximum stress range due to the actual traffic was then compared to the constant amplitude fatigue limit of riveted connections of 52 MPa. The fact that the maximum stress range from heavy freight traffic is 59 MPa means that a part of the past stress spectrum was above the fatigue limit, and thus, there is a theoretical fatigue damage todate. The limit below which no crack propagation occurs is therefore no longer constant, but decreases with increasing damage. This decreasing limit is called the damage limit $\Delta\sigma_{th}$ representing a reduction of the constant amplitude fatigue limit [2],[3] (Fig. 4):

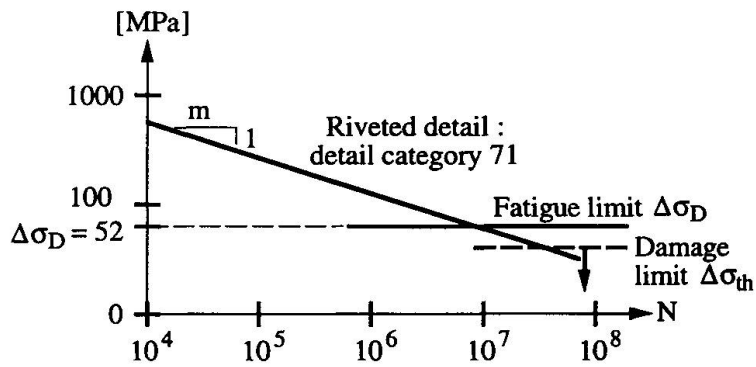


**Fig. 4 :** Definition of fatigue strength curve

$$\Delta\sigma_{th} = \Delta\sigma_D \cdot (1 - D)$$

In the present case, this reduction was found to be minor ($\Delta\sigma_{th}$=51 MPa compared to $\Delta\sigma_D$=52 MPa) and the fatigue damage effect due to the past traffic is thus almost negligible.

### 4.4 Fatigue safety for future traffic

With the predicted stress ranges $\Delta\sigma(Q_{fut})$ less than 31 MPa for the suburban trains, these will be significantly smaller than the fatigue damage limit $\Delta\sigma_{th}$. Consequently, the fatigue safety for future traffic is verified, since:

$$\Delta\sigma(Q_{fut}) < \frac{\Delta\sigma_{th}}{\gamma_{fat}}$$

The planned future suburban rail traffic should not lead to any further fatigue damage and, from the point of view of fatigue, a theoretically infinite number of future passenger trains could cross the bridge.

## 5. FRACTURE MECHANICS ASSESSMENT

### 5.1 Motivation

Normally, stage 3 of figure 1 would not be necessary for the assessment, since both stages 1 and 2 have shown adequate safety. However, in a riveted structure, there might exist crack-like defects due to the riveting process or flaws in the wrought iron material stemming from its fabrication.
Additionally, undetected cracks might be present although regular inspections were conducted. The question remains: What is the behavior of these defects under future traffic loading? As an illustration, a lamella of the chord member at section M1 is considered (Fig. 5).

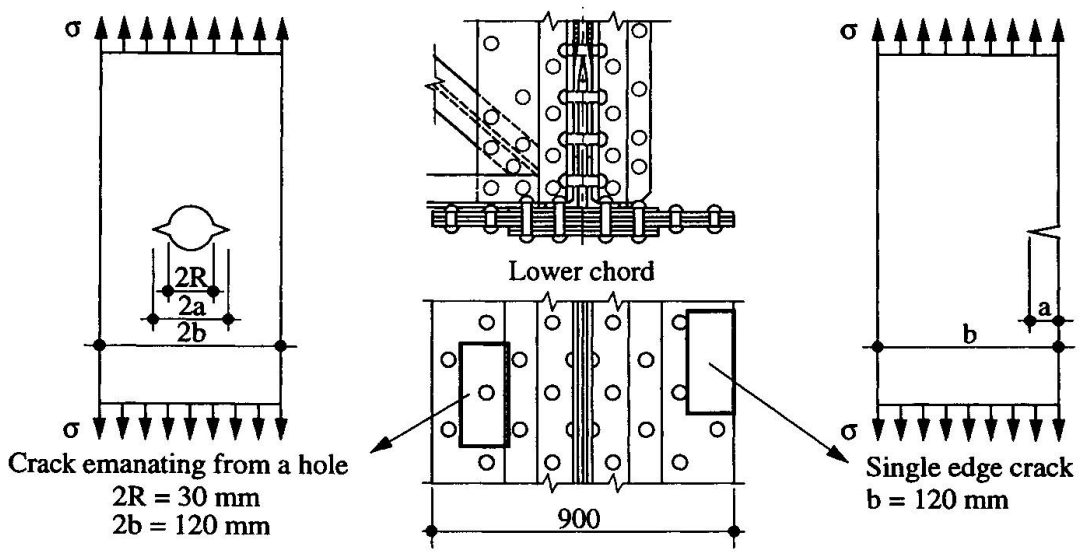


**Fig. 5 :** Modeling of cracks in the chord

### 5.2 Critical crack size

A first question is whether the critical crack can be detected before the member fails. The critical crack size $a_{cr}$ is estimated using two criteria:

- With the *strength of materials* approach, failure occurs if, under maximum stress $\sigma_{max}$ in the member, the net section stress in the cracked section reaches the yield strength.
- With the *linear elastic fracture mechanics* approach accounting with $Y(a_{cr})$ for the stress concentration at the crack tip, failure occurs if the stress intensity K becomes equal to the fracture toughness $K_{IC}$ (Griffith' criterion):

$$K = Y(a_{cr}) \cdot \sigma_{max} \cdot \sqrt{\pi \cdot a_{cr}} = K_{IC}$$

The analysis revealed that a crack in section M1 having a length of 25mm larger than the rivet head on each side must appear before failure of the chord member occurs. Such cracks should be detectable during visual inspection, particularly since the fracture critical locations are known.

### 5.3 Fatigue crack propagation

A next question is whether undetected cracks will propagate due to the future passenger trains. The modified Paris law was used to study this:

$$da/dN = C \cdot (\Delta K^m - \Delta K_{th}^m)$$

da/dN : rate of increase in crack size per stress cycle
C : crack propagation constant

m : slope of the crack propagation curve
$\Delta K$ : stress-intensity factor range
$\Delta K_{th}$ : threshold stress intensity factor range

Assuming that the initial flaw at the time of construction was 1mm at the edge of the rivet hole and applying the maximum stress range of 59 MPa due to the past heavy freight traffic, the analysis shows that (using conservative values of the material constants C, m and $\Delta K_{th}$) a crack would have propagated by only 1mm todate. Subsequently, a crack size of 2mm was assumed to be actually present in the structure. Further crack propagation under the future traffic was calculated with this crack size as a starting value. Figure 6 shows that after passage of 1 million passenger trains, representing about 33 years of future service life, this crack would only grow by an additional 5mm. Such a crack would still be hidden under the rivet head. It could therefore not be detected. However, it is very far from the critical crack size calculated above.

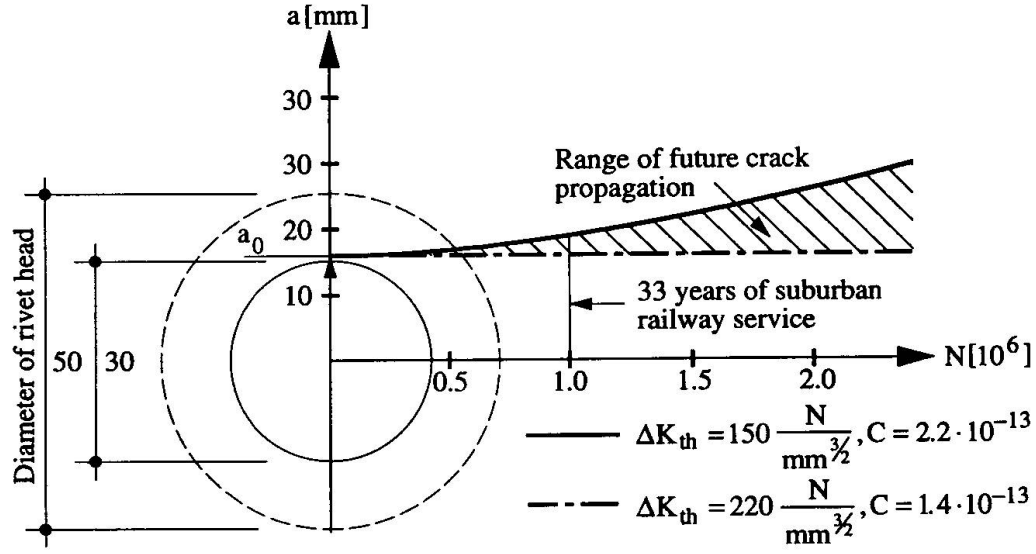


**Fig. 6 :** Fatigue crack propagation due to future suburban railway traffic ($a_0$= 17 mm)

## 6. CONCLUSIONS

Based on a procedure following three stages, the following conclusions can be drawn:

1. The overall evaluation has shown that this 135 year old bridge is still safe and serviceable, mainly due to the fact that it was originally designed for two tracks but in the event only carried one. Careful inspection and maintenance has ensured and will ensure that the bridge can be kept in service for many years to come.
2. Unlike during design, information about actual loads and section properties can be used during an assessment in order to more closely represent the actual behavior of a structure. More sophisticated methods like, in the present case, fracture mechanics can be efficient tools.
3. A thorough evaluation is generally cost effective because it may enable planned suburban passenger traffic to be carried without the need for costly interventions.

## REFERENCES

[1] BRÜHWILER E., SMITH I.F.C., HIRT M.A., Fatigue and fracture of riveted bridge elements. Journal of Structural Division, ASCE, Vol. 116, No. 1, January 1990, pp. 198-214.
[2] KUNZ P., Probabilistic method for the evaluation of fatigue safety of existing steel bridges. Doctoral Thesis Nr. 1023, ICOM - Steel Structures, Swiss Federal Institute of Technology Lausanne, Switzerland, 1992. (in German)
[3] KUNZ P., BRÜHWILER E., HIRT M.A., Evaluation of The Remaining Fatigue Life of Steel Bridges. Proceedings, Fourth International Conference on Short and Medium Span Bridges, Halifax, Canada, August 1994, pp. 1219-1230.

# Updated Service Life Evaluation of Bridges through Measurements

## Meilleure estimation de la durée de vie de ponts par des mesures in situ

## Durch Messungen verbesserte Einschätzung der Nutzungsdauer von Brücken

**Werner BAUMGÄRTNER**
Dr.-Ing.
Techn. Univ. München
Munich, Germany

Werner Baumgärtner, born in 1944, received his engineering degree at the Technical University of Munich and then worked in construction offices. Since 1972 he has been employed by the TU Munich and works in the field of structural mechanics, especially dynamics and dynamic measurements at structures.

**Karsten GEISSLER**
Civil Engineer
Techn. Univ. Dresden
Dresden, Germany

Karsten Geissler, born in 1966, received his civil engineering degree at the Technical University of Dresden, where he has been employed since 1992. He works in the field of fatigue of bridges, with special interest in fracture mechanics and safety analysis.

**Holger WAUBKE**
Civil Engineer
Techn. Univ. München
Munich, Germany

Holger Waubke, born in 1964, received his engineering degree at the Technical University of Munich, where he has been employed since 1990. He has been involved in the theory and measurement of wave propagation and structural vibration, especially for bridges. Now working on stochastic finite elements.

**SUMMARY**

An improved estimation of the service life of a structure with respect to fatigue is possible if measured stress spectra are used. Based on a safety index, the influence of the effective traffic loading on structures compared to design loading is determined. The methodology shows a consistent combination of computer calculations and long-term measurements and can be used for structural monitoring. Results are given for an old steel bridge and a new composite bridge.

**RÉSUMÉ**

La durée de vie d'une construction dépend fortement de phénomènes de fatigue. Cette durée peut être mieux estimée si des mesures de spectres de contraintes sont faites. L'influence de la charge réelle de trafic sur la structure est exprimée avec un coefficient de sécurité permettant une comparaison avec la charge de trafic calculée lors du projet. La démarche proposée résulte d'une combinaison efficace entre des calculs automatisés et des mesures permanentes sur l'ouvrage. Les résultats sont présentés pour un ancien pont métallique et pour un pont mixte récent.

**ZUSAMMENFASSUNG**

Eine Einschätzung der Nutzungsdauer von Ingenieur-Bauwerken wird wesentlich verbessert, wenn gemessene Spannungskollektive verwendet werden. Auf der Basis eines Sicherheitsindex kann der Einfluss der tatsächlichen Verkehrslasten hinsichtlich der Materialermüdung, verglichen mit normierten Lastannahmen, berücksichtigt werden. Die vorgestellte Methode zeigt eine konsequente Nutzung von Rechnung und Langzeitmessung und kann zur Bauwerksbeobachtung eingesetzt werden. Es werden Ergebnisse für eine alte Stahlbrücke und eine neue Verbundbrücke vorgestellt.

## 1. INTRODUCTION

To do service-life evaluations for civil engineering structures in the state of planning models have to be used for the static system as well as for the loading. Whereas there are reliable statistical data available for the structural model (geometry, material behaviour), the modeling of the load is relatively uncertain, especially for the traffic loading covering the whole time of its service-life, e.g. 80 years. When fatigue-life is decisive, the choice of the parameters of the load model yields, besides the material parameters, the most important influence on the safety index ß. The decrease of ß due to fatigue caused by traffic loading for existing constructions can be updated by the use of measured stress spectra.
A lot of theoretical and experimental effort was spended during the last years with the aim to integrate field measurements and inspection results to bridge assessment (e.g. Zhao et al. 94, Moses et al 94).

## 2. METHOD

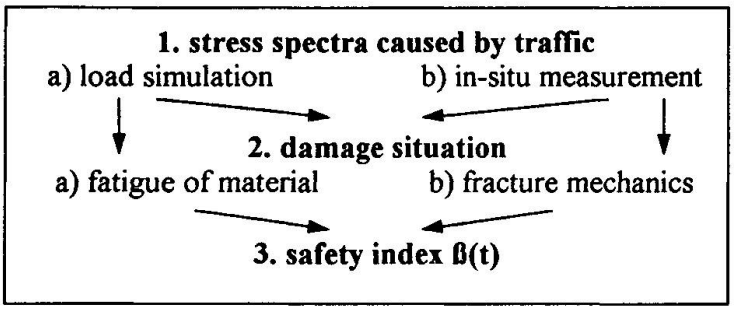


Fig. 1 Possibilities to estimate the safety-index ß(t)

The method we use to estimate structures (i.e. old bridges) with respect to their residual service-life, offers four possibilities to derive a safety index as a function of time ß(t) (fig. 1). Additionally adapted inspection intervals for various structural members can be recommended. As the different sensibility with respect to damage of the structural members is characterized by ß, inspection personnel can work with more efficiency.

The innovative concept of the presented methodology is:
- using a comfortable computer program to do (1a) traffic simulations and calculations of stress spectra, (2) damage calculations and (3) assessments of the safety index ß and the derived residual service life and
- the consequent integration of in-situ measurements (1b).

### 2.1 Estimation of stress caused by traffic (stress spectra)

Calculating stress spectra using a structural model based upon **statistic traffic load simulation** with appropriate programs running on a PC (Geissler 95) is an economic method to get a first estimation of stress spectra for chosen points of a structure. Different parameters concerning defined load spectra and details of the structure can be studied.

**In-situ measurements** give a much better estimation for the stresses at the observed points, thus the real loading and the real behaviour of the structure are taken into account. The measurement program we are using (Baumgärtner 90) is running permanently and classifies the stress ranges in real-time.

In combination of the two mentioned methods we can calibrate traffic load models according to the measured stress spectra and therefore we can adjust stress spectra of structural members not measured.

### 2.2 Evaluation of accumulated damage

Based on the stress spectra, the **damage caused by fatigue** can be evaluated, e.g., using the Palmgren-Miner method. In connection with permanent measurements we also use different accu-

mulation hypotheses which take into account the time history of the stress ranges(Baumgärtner and Waubke 93).

Especially when cracks are detected or hidden cracks have to be taken into account, e.g. when cracks cannot be observed under rivets, the **theory of fracture mechanics** can be applied in a very successful manner to get an estimation of the residual service life. The use of fracture mechanics could also be necessary when the fatigue calculation yields a damage value D greater than 1, or in the case when no information of the stress history is available.

### 2.3 Safety index ß(t)

The safety index ß is a defined value for an estimation of the probability of failure. To calculate the safety index we use FORM (First Order Reliability Method) and Monte-Carlo-Simulation.

| | |
|---|---|
| 1. Stress range ($\Delta\sigma$) | 0.60 .. 0.80 |
| Crack prop. exponent ( m) | 0.60 .. 0.80 |
| 2. Crack prop. factor ( C ) | 0.20 .. 0.25 |
| 3. Initial crack length ( $a_0$ ) | 0.15 .. 0.20 |
| 4. Fracture toughness ( $K_c$ ) | 0.03 |
| 5. Yield strength ( $f_y$ ) | 0.001 |

Fig. 2 Influence values $\alpha_i$ with regard to fatigue life

Our interest in the safety index ß idoes not only concern its absolute value, but also as an operative value. With the determination of influence values $\alpha_i$, the dominant influence of the loading assumptions on the safety index and on the residual service life can be shown. Results of systematic calculations, based on fracture mechanics, yielded a rank of sensibility of the parameters with regard to remaining fatigue life, given in fig. 2. One consequence should be, to put greater attention on the estimation of the stress of existing constructions, e.g. by doing measurements (Waubke and Baumgärtner 93).

## 3. APPLICATION TO BRIDGES

### 3.1 Bridge „Fischerdorf", bridge „Kaditz"

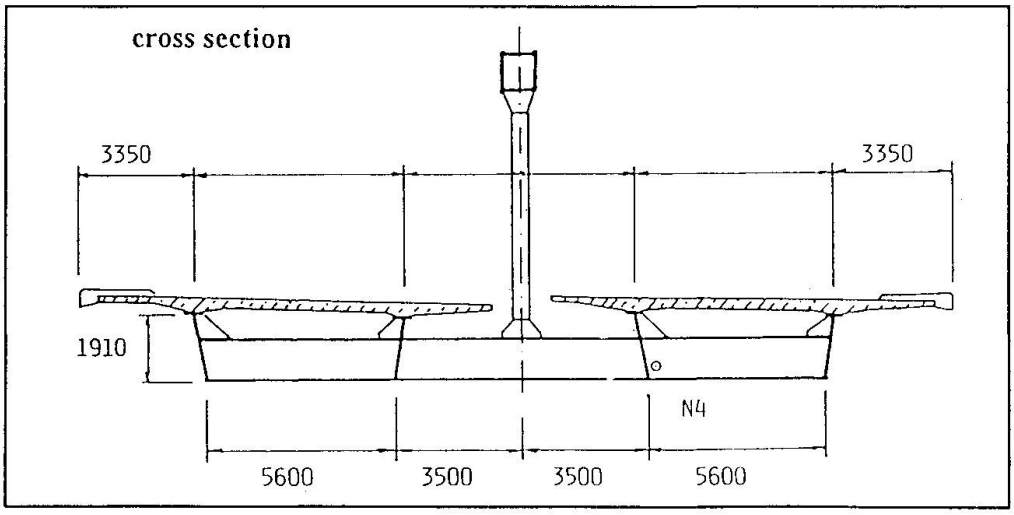


Fig.3 Bridge „Fischerdorf", cross-section

The static system of the **motorway bridge „Fischerdorf"** consists of one middle-arch, eight hangers and cross-beams made of steel and two longitudinal beams made of steel and concrete (fig.3). The span is 102.5 m. The decision to do stress measurements was made, to get better information about the effective stress due to traffic loading with respect to the spatial load bearing system and the influence of the interaction of steel and concrete. Due to the different welded members of the bridge 40 measurement points had been supplied with strain gages.

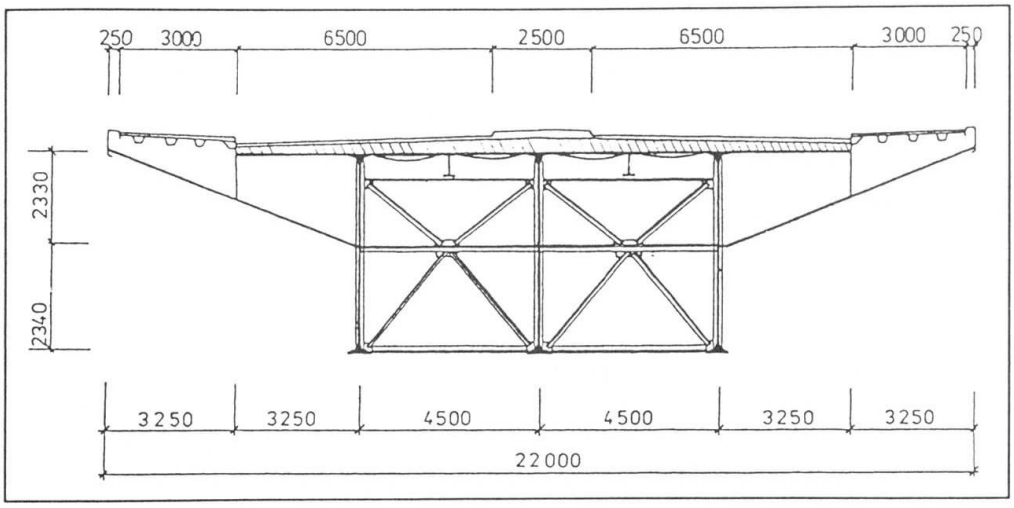


Fig. 4 Bridge „Kaditz", cross-section

The **road bridge „Kaditz"** is about 50 years old and crosses the Elbe river near Dresden. The bridge is a riveted construction and has 4 spans with a main span of 115 m. The cross section (fig. 4) shows the 3 steel girders ( 4.7 m high) and the concrete slab. The degree of interaction of steel and concrete is unknown because there are no designed links. Investigations were decided to ensure future safe performance with respect to increased traffic loading. Based on measurements we can say, that there is a nearly full composite effect in parts of the fields.

## 3.2 Results for bridge "Fischerdorf"

A measurement system was developed to get representative stress spectra for a long time interval. This system, consisting of a measurement device and computer programs, is able to do permanent stress measurements with parallel evaluation of stress ranges using the „rain flow" method in real time.

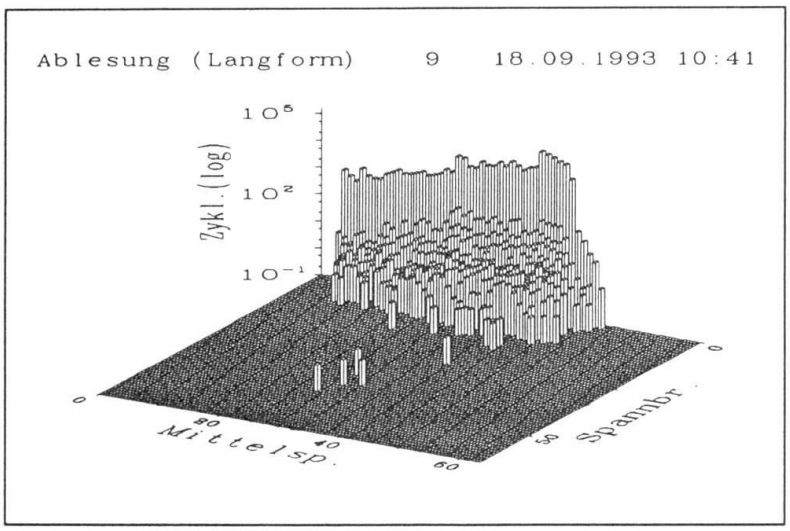


Fig. 5 Number of stress ranges, classified with respect to amplitude and mean value ( bottom of main girder )

A measurement point at the bottom of a longitudinal beam was selected to present some results. The few extraordinary high stress-ranges in fig. 5 are caused by the change of temperature. Using standardized S-N-curves (e.g. Eurocode) the accumulated fatigue D(t) can be recorded at given time intervals, e.g. 2 hours. In fig. 6 the development of D(t) is shown for different detail categories to realize their influence. Fig. 7 shows an extrapolation of ß(t) for a cross-beam based on stress spectra received by a one month measurement. The detail category 71 (Eurocode) was applied. A factor of 1.5 was multiplied on the measured stresses to take into account some increase in the weight of the trucks and that the strain gage is pasted in some distance to the point of interest.

Further development of D(t) and ß(t) will be observed at the bridge, to study the alteration of the traffic and the roughness of the lanes, accompanied by calculations with a FE model. Measurements covering three years show, that the stress spectra under traffic are much "smaller" than calculated ones under design loading. Till now, fatigue is not relevant for the instrumented members.

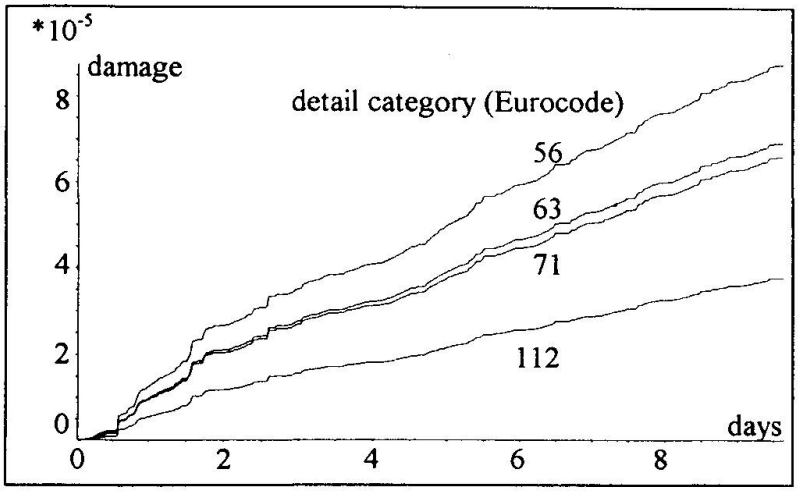


Fig. 6 Damage accumulation ("Fischerdorf")

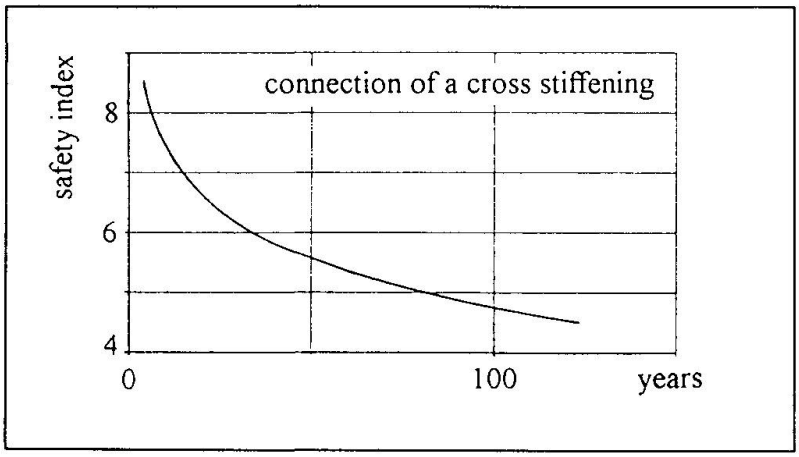


Fig. 7 safety index ß(t) ("Fischerdorf")

3.3 Results of bridge „Kaditz"

The loading is simulated considering three different traffic situations and the stress spectra were calculated for a critical point of the main beam (bottom flange). Hidden cracks on both sides of a rivet hole were evaluated as the worst crack situation. The development of calculated crack lengths confirm the great influence of the different traffic loadings (fig. 8).

To do a reliability analysis based on fracture mechanics we can calculate with the developed computer program the decrease of the safety index ß as a measure for the increase of the probability of failure. In fig. 9 a comparison is given between ß(t) based on measurements lasting several weeks and based on the traffic load model „medium distance traffic". As long as the observed traffic situation does not change the fatigue-life doubles for the same level of the safety index. The theory of crack propagation and the assumptions of the crack situation may be very conservative for this safety evaluation. As the stress

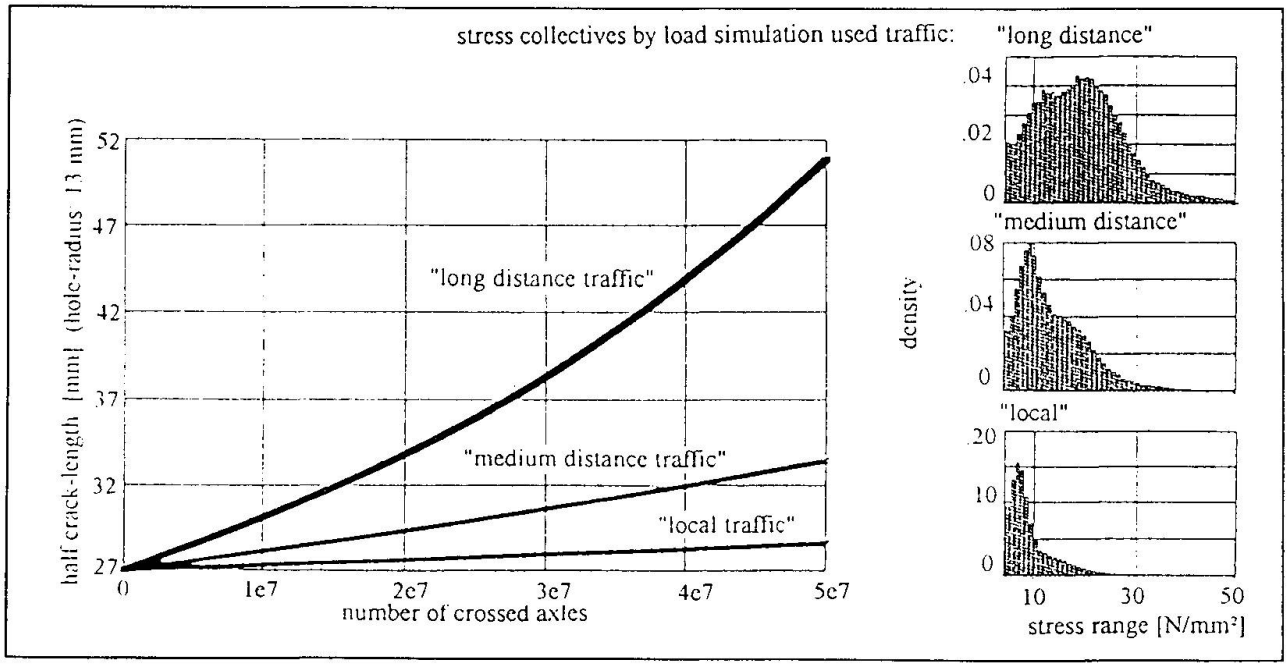


Fig. 8 right: Stress spectra based on traffic simulations ("Kaditz")
left: Crack lengths by time

level is not very high and no cracks are detected until now, the safety situation can be accepted. Additional material tests also confirmed a sufficient safety level during the inspection intervals.

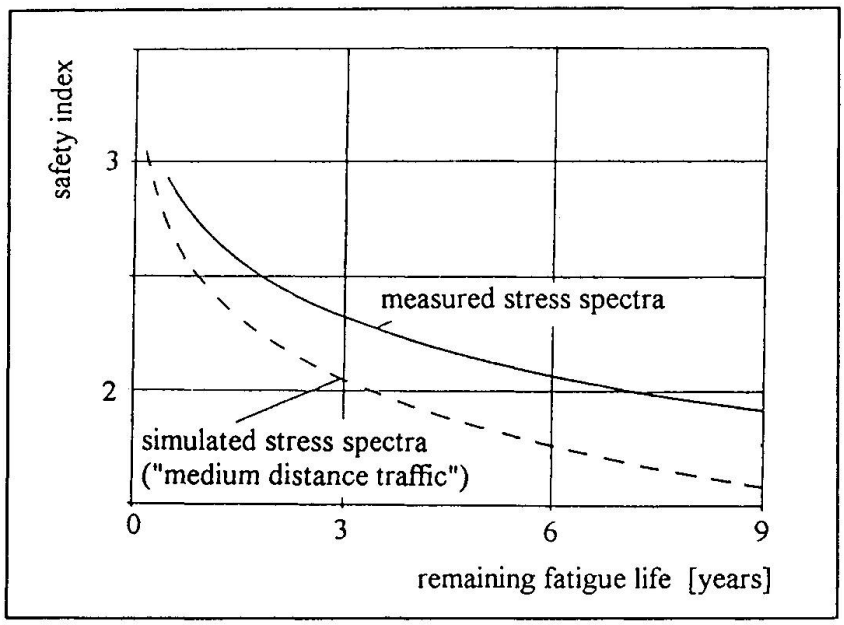


Fig. 9 Safety index ß(t) (bridge „Kaditz"), based on
a) simulated traffic b) measured stress spectra

## 4. FINAL REMARKS

The presented results show in a clear manner that the utilization of measured stress spectra can give a considerable improvement for the assessment of bridges. The applied methodology is very efficient as one can do numerical comparisons between fatigue accumulation and crack propagation and one can also calibrate traffic models by field measurements, if necessary and available.

To give some support for the installation of monitoring systems on constructions the „Deutsche Gesellschaft für Zerstörungsfreie Prüfung (DGfZP, „German Society for Nondestructive Testing") is going to develop an instructional pamphlet with the title „Automatisierte Dauerüberwachung - Dynamische Messungen" („Automatized Permanent Monitoring - Dynamic measurements", to be published summer 95).

## REFERENCES

Baumgärtner W. (90): Recording of Stresscollectives of a Steel Bridge.IABSE Report 59.

Baumgärtner W., Waubke H. (93): Service life estimation of Bridges - based on permanent stress measurements. Bridge management 2 „Inspection, maintenance, assessment and repair". London: Telford.

Geißler K (95): Restlebensdauerberechnung von Stahlbrücken unter Nutzung detaillierter Beanspruchungsverläufe. Stahlbau 64 (to be published March 95).

Moses F., Lebet J. P., Bez R. (94): Application of Field Testing to Bridge Evaluation. J. Struct. Engrg., ASCE 120(6).

Waubke H., Baumgärtner W.(93): Traffic load estimation by long-term measurements. IABSE Colloquium Copenhagen „Remaining structural capacity", Report 67.

Zhao Z., Haldar A., Breen F. L. Jr. (94): Fatigue-Reliability Evaluation of Steel Bridges. J. Struct. Engrg., ASCE, 120(5).

# Evaluation of Existing Highway Bridges for Overloaded Trucks

## Évaluation des ponts autoroutiers existants pour camions surchargés

## Beurteilung bestehender Autobahnbrücken für überladene Lastwagen

**Gongkang FU**
Head, Structural Research
NY Dept of Transportation
Albany, NY, USA

**Osman HAG-ELSAFI**
Eng. Research Specialist
NY Dept of Transportation
Albany, NY, USA

Gongkang Fu received his Ph.D. in civil engineering from Case Western Reserve University, Cleveland, OH, USA. He has been involved in bridge engineering since 1987.

Osman Hag-Elsafi, born in 1954, received his B.Sc. from the University of Khartoum, Sudan, and Ph.D. in civil engineering from the University of Pittsburgh, PA, USA. He worked as a development engineer for West Virginia DOT, and currently is with New York State DOT.

**SUMMARY**

Overloaded trucks exceeding legal weight limits commonly cross highway bridges. Some of these bridges are subjected to deterioration or were constructed for out-of-date, lower design loads. Many US states adopt the AASHTO rating concept with or without an overstress criterion, and the basis of these overstress criteria has not been well documented. This paper presents the development of a new overload-permit checking procedure for bridge evaluation, based on uniform bridge safety and in the format of load-and-resistance factors. Annual and trip overload permits are covered. This procedure may be included in bridge evaluation codes for overload checking.

**RÉSUMÉ**

Des camions, dont le poids maximal excèdent la charge limite autorisée, continuent à circuler sur certains ponts autoroutiers, bien que ceux-ci soient déjà vétustes ou qu'ils aient été dimensionnés pour des charges de trafic inférieures. De nombreux états des USA appliquent la classification AASHTO avec ou sans concept de dépassement de contraintes, dont il est mal aisé de vérifier l'origine. Le présent article expose une nouvelle méthode de contrôle des surcharges, mise au point pour évaluer un type de sécurité uniforme des ponts, à partir de facteurs de charge et de résistance. Ce procédé tient compte d'autorisations de surcharges à caractère unique et annuel. Il serait possible d'inclure une telle procédure dans des normes d'évaluation des ponts.

**ZUSAMMENFASSUNG**

Autobahnbrücken werden von Lastwagen befahren, die das zulässige Gesamtgewicht überschreiten, obwohl einige dieser Brücken verfallen oder für antiquierte, niedrigere Verkehrslasten bemessen wurden. Einige US-Staaten verwenden die AASHTO-Einstufung mit oder ohne Ueberspannungskriterien, deren Herleitung schlecht nachzuvollziehen ist. Der Beitrag berichtet von der Entwicklung eines Ueberlastprüfverfahrens auf der Basis gleichförmiger Brückensicherheit mittels Last- und Widerstandsfaktoren. Jährliche und einmalige Ueberlastbewilligungen werden berücksichtigt. Das Verfahren könnte in Brückenbewertungsnormen einfliessen.

## 1. INTRODUCTION

It has become a common practice that overweight trucks exceeding legal limits may be permitted to operate in highway systems. On the other hand, some bridges in these systems may be inadequate for these overloads, due to various reasons such as out-of-date design requirements and/or structural deterioration. Overweight trucks in the United States are now accommodated by special permit systems in the states, for economic advantages of heavy freight transportation. However, many state transportation agencies are faced with increasing weights and numbers of overload trucks, and how much reserve strength can be used to meet the growing demand remains an issue. At the same time, overload is indeed recognized as one of the major modes of bridge failure [Shirole et al 1991]. A common approach to permit issuance is to evaluate bridges according to current AASHTO rating requirements [AASHTO 1983, 1989, 1992] against the overload vehicle, with or without a set of overstress criteria. The overstress allowance is justified by overweight vehicles' lower frequency of appearance on the highway system than normal truck loads due to their small volume. On the other hand, the basis of these overstress requirements has not been well documented, and the AASHTO rating requirements are intended to cover only normal traffic.

With respect to bridge capacity, two types of overload truck permit are currently issued in New York State for divisible and nondivisible loads. Divisible loads are those that can be readily shipped separately. A nondivisible load is defined as one piece or item that cannot be separated into units of less weight without affecting its physical integrity. Note that all states in the US now issue permits, under special circumstances, to trucks carrying nondivisible loads exceeding federal and/or state weight-limits, and about half the states also issue exceptions for divisible loads. Two types of nondivisible permits are used by the New York State Department of Transportation (NYSDOT) with respect to frequency of operation: trip and annual permits, which are valid for a few weeks and a year, respectively. During Federal Fiscal Year 1988-89, for example, NYSDOT issued over 23,000 trip permits and over 2,800 annual permits for nondivisible overloads. For a trip permit, 50-percent overstress is allowed using the AASHTO allowable stress method. For an annual permit, 25-percent overstress is allowed. These overstress criteria are based on the inventory rating, which is equivalent to the design requirement [AASHTO 1983]. This study focuses on the nondivisible overload-permits, and develops a new overload checking procedure for bridge evaluation based on uniform bridge safety.

## 2. PROPOSED FORMAT FOR BRIDGE EVALUATION CONSIDERING OVERLOADS

A load and resistance factor format for overload permit checking is proposed here for evaluation of primary highway-bridge components:

$$\phi R_n > \gamma_D D_n + \gamma_p L_p \tag{1}$$

where $\phi$, $\gamma_D$, and $\gamma_p$ are respectively factors for resistance reduction, dead load effect, and permit load effect. $R_n$, $D_n$, and $L_p$ are respectively nominal values of the component resistance, dead load effect, and permit load effect including dynamic impact for the structural component. Note that resistance and load factors $\phi$, $\gamma_D$, and $\gamma_p$ are applied only to the nominal values. They will influence the safety of bridges to be evaluated, and are to be prescribed here to assure a target safety level. Safety of bridges is assessed using the following model.

## 3. SAFETY MODELING FOR BRIDGES SUBJECTED TO OVERLOADING

Consider the same component in Eq.(1). Its safety is measured by a safety index $\beta$:

$$\beta = \Phi^{-1}(1-P_f) \tag{2}$$

where $\Phi(.)$ is the cumulative probability function of the standard normal variable, and $P_f$ is the failure probability of the component. For conservative estimation,

$$P_f = P_{f1} + P_{f2} \tag{3}$$

$$P_{f1} = \text{Probability } [Z_1 < 0] \quad \text{and} \quad P_{f2} = \text{Probability } [Z_2 < 0] \tag{4}$$

$$Z_1 = R - D - g\,I\,M\,m \quad \text{and} \quad Z_2 = R - D - g\,I\,M_p \tag{5}$$

where $Z_1$ and $Z_2$ are safety margins respectively for general truck traffic and the permit overload truck. R and D are resistance and dead load effects. g and I are load distribution factor and dynamic impact factor. M is the maximum load effect of general truck traffic without impact, and $M_p$ is the maximum static load effect of the overload truck. m is a factor to cover configuration variation of trucks in traffic. Due to such uncertainties as variations in design, construction, and service condition, R, D, g, I, M, and m are modeled by independent lognormal random variables.

The statistics of resistance R, dead load effect D, distribution factor g, impact factor I, and configuration factor m were based on data collected to cover variations in US practice [Moses et al 1987, Imbsen et al 1987, Fu et al 1992]. The statistics of static live load effect M were obtained by convolution to include all possible contribution from trucks of various weights at various locations on the bridge, with respectively associated probabilities of occurrence:

$$\text{Probability}[M_0] = \Sigma_i \Sigma_j \text{ Probability}[\text{weight}_i] \text{ Probability}[\text{location}_j] \tag{6}$$

where $M_0$ is a realization of maximum moment M. The probabilities under the summations were obtained by weigh-in-motion data from sites over US [Moses et al 1987, Imbsen et al 1987, Fu et al 1992] and data from NYSDOT 1991 overload permits whose histograms are shown in Fig.1. Note that the weight frequencies are given within each (annual or trip) permit group, and the general legal gross-weight-limit is 80 kips. The double summation in Eq.(6) is taken over all the combinations of weight and location that induce maximum load effect of magnitude $M_0$. The probabilistic distribution of maximum load effect due to an event of trucks presence on a bridge is readily obtained by varying $M_0$ in Eq.(6) including overload trucks. This distribution is then projected to that of M by covering a period of 2 years for a traffic volume of 2000 annual-average-daily-trucks (AADT). This period is the maximum interval of inspection for US highway bridges. Based on the NYSDOT permit data, 2.65, 0.22, and 0.05 percent were used as equivalent volume ratios of divisible-, nondivisible-annual-, and nondivisible-trip-permit traffic to normal traffic, respectively, in including permit load effects. The mean and standard deviation of the maximum load effect M were calculated based on this projected distribution, and then used in computation of $\beta$ in Eq.(2).

## 4. OVERLOAD CHECKING PROCEDURE BASED ON UNIFORM BRIDGE SAFETY

Given load effects $D_n$ and $L_p$, the mean value of random variable R of Eqs.(2) to (5) varies depending on the safety factors $\phi$, $\gamma_D$, and $\gamma_p$, and so in turn does the safety index $\beta$. This mechanism allows adjustment of these safety factors in order to reach a target safety index $\beta$. The relative magnitudes between the dead and live load factors in Eq.(1) are determined to produce relatively uniform $\beta$ over bridge span lengths.

The checking procedure in Eq.(1) is similar to AASHTO load factor design or rating [AASHTO 1983, 1992] and the load and resistance factor rating [AASHTO 1989]. To be consistent with these codes, $\phi$=0.95 was selected for steel and prestressed concrete and 0.90 for reinforced concrete, and $\gamma_D$=1.2. $\gamma_p$ was determined to reach a target safety index $\beta$=2.3, which represents the average highway bridge safety assured by these AASHTO codes [Moses et al 1987, 1989]. For load effect of bending moment, Fig.2 shows the relation between the required $\gamma_p$ and the overload-vehicle gross-weight, respectively for annual and trip permits. $\gamma_p$ for annual permits is shown to be lower than 1.0 for heavier than 120 kips, using multiple lane checking (assuming simultaneous presence of the overload-permit truck in more than one lane), indicating that simultaneous presence is unlikely for such heavy trucks in two or more lanes. Thus the permit load factor need not be higher than 1. Considering the relative low appearance frequencies of trip-permit trucks, $\gamma_p$ for trip permits was obtained for one-lane checking (assuming presence of the overload-permit truck only in one lane). In general, the reduced likelihood of simultaneous presence of heavy trucks is reflected in these curves by $\gamma_p$ decreasing with increasing gross weight. This covers low appearance frequencies of relatively heavy trucks.

In order to assure these results are not sensitive to the input data, a comprehensive sensitivity analysis was conducted by inspecting variation of the safety index $\beta$ due to possible changes in the statistical data for R, D, g, I, and M. These changes include those due to variation in total traffic volume, load spectra among sites, and degree of compliance with weight limits for permit truck operation. Results [Fu et al 1995] show that $\gamma_p$ in Fig.2 is not sensitive to these variations.

For practical application, a simplified procedure is proposed in Table 1, based on $\gamma_p$ discussed above. Note that decreasing $\gamma_p$ with increasing permit load is maintained as shown in Table 1, indicating the reduced likelihood of having heavy trucks simultaneously on the bridge. The grouping points (130 and 200 kips) for practical application were selected by conservatively recognizing significant frequency changes in the weight distributions (Fig.1).

## 5. APPLICATION EXAMPLES

Consider a truck with three axles weighing 30.5, 32.67, and 32.67 kips and longitudinally spaced by 11.7 and 6.5 ft. A 200-ft span steel girder bridge with HS-20 inventory strength [AASHTO 1983] is checked here. Using the checking equation Eq.(1), Table 1 gives $\phi$ = 0.95, $\gamma_D$ = 1.20, and $\gamma_P$ = 1.35 (for gross weight ≈ 96 kips) for annual permit. Assume the girder spacing to be 8 ft and dead to live load ratio $D_n/L_{HS20}$ = 0.0132 Span Length [Moses et al 1987], where $L_{HS20}$ is the maximum moment induced by HS-20 truck includingdynamic impact. $D_n$ = 9,083 kip-ft and $L_P$ = 5,201 (8/11) = 3,783 kip-ft, using the AASHTO load distribution factor [AASHTO 1992]. Required $R_n$ = (1.20 * 9,083 + 1.35 * 3,783)/0.95 = 16,849 kip-ft. Available $R_n$ = (9,083 + 3,442)/0.55 = 22,773 kip-ft, according to the inventory rating of HS-20 strength by the allowable stress method. Available $R_n$ > Required $R_n$. OK. Consider the same truck and the same bridge for trip permit. Using the checking criterion Eq.(1), Table 1 gives $\phi$ = 0.95, $\gamma_D$ = 1.20, and $\gamma_P$ = 1.55 (gross weight ≈ 96 kips). $D_n$ = 9,083 kip-ft and $L_P$ = 5,201 (8/14) = 2,972 kip-ft. Required $R_n$ = (1.20 * 9,083 + 1.55 * 2,972)/0.95 = 16,323 kip-ft. Available $R_n$ = (9,083 + 3,442)/0.55 = 22,773 kip-ft. Available $R_n$ > Required $R_n$. OK.

## 6. SUMMARY AND CONCLUSIONS

A permit checking procedure based on relatively uniform safety was developed to take into account low appearance frequencies of overweight trucks. The average bridge safety assured by the current AASHTO codes was used as the safety target in determining the live load factor $\gamma_P$ of the proposed

load-and-resistance-factor checking requirement. This checking procedure may be included in codes of bridge evaluation for overweight trucks.

## 7. ACKNOWLEDGEMENTS

J.Lall, F.P.Pezze, R.D.Wright, and J.Tang with NYSDOT Engineering Research and Development Bureau assisted in preparing the figure, data collection, and current practice review. Thanks are due to D.B.Beal, G.A.Christian, R.C.Holt, J.M.Robb, D.F.Rose, and S.S.Kulkarni with Structures Design and Construction Division and R.DeRocco with Traffic Safety Division of NYSDOT for their information and discussions. USDOT Federal Highway Administration (FHWA) provided partial financial support. The contents of this paper reflect the views of the authors, and do not necessarily reflect the views of NYSDOT or FHWA.

## REFERENCES1.

1. AASHTO Guide Specifications for Strength Evaluation of Existing Steel and Concrete Bridges, Washington, D.C., 1989
2. AASHTO Manual for Maintenance Inspection of Bridges, Washington,D.C., 1983
3. AASHTO Standard Specifications for Highway Bridges, Washington,D.C., 15th Ed. 1992
4. Fu,G. and Moses,F. "Overload Permit Checking Based on Structural Reliability", TRB TRR 1290, 1991, Vol.1, p.279
5. Fu,G. and Tang,J. "Proof Load Formula for Highway Bridge Rating", TRB TRR 1371, p.129, 1992
6. Fu,G. and Hag-Elsafi,O. "Safety-Based Bridge Overstress Criteria for Nondivisible Overloads", (in print) Engineering R & D Bureau, New York State Dept. of Transportation, 1995
7. Imbsen,R.A., Liu,W.D., Schamber,R.A., and Nutt,R.V. "Strength of Existing Reinforced 8. Concrete Bridges", Report 292, NCHRP, TRB, 1987
8. Moses,F. and Verma,D. "Load Capacity Evaluation of Existing Bridges". Report 301, NCHRP, TRB, 1987
9. Shirole,A.M. and Holt,R.C. "Planing for A Comprehensive Bridge Safety Assurance Program", TRB TRR 1290, 1991, Vol.1, p.39

Fig. 1 Histogram of Nondivisible Permit Loads in New York, 1991

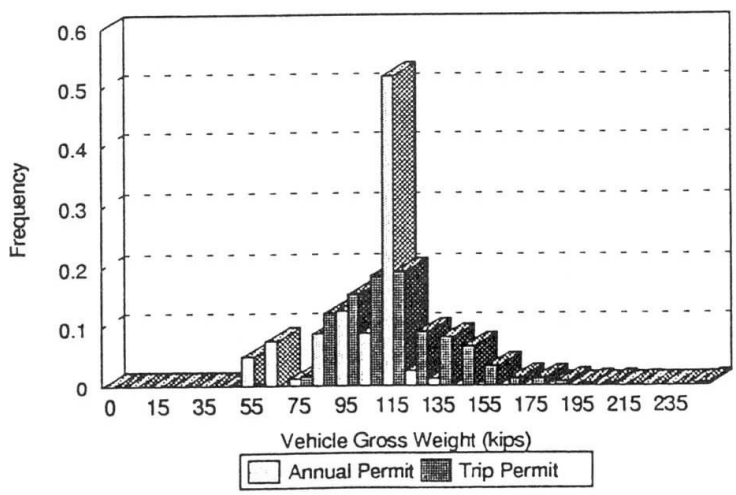

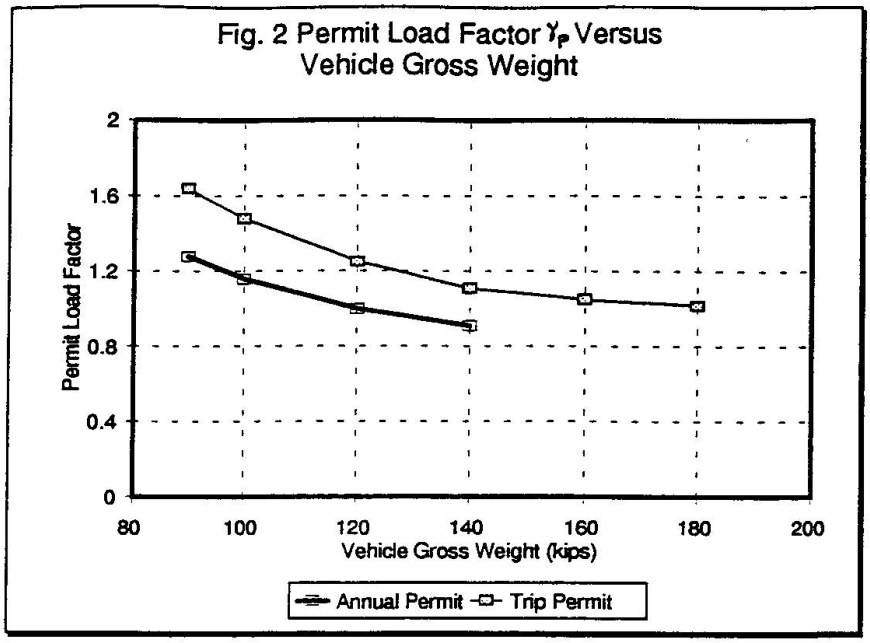


| Permit Type | Annual (Multilane Checking) | | Trip (One-lane Checking) | | |
|---|---|---|---|---|---|
| Vehicle Gross Weight (kips) | ≤ 130 | > 130 | ≤ 130 | > 130 ≤ 200 | > 200 |
| $\gamma_P$ | 1.35 | 1.05 | 1.55 | 1.15 | 1.05 |
| $\phi$ | 0.90 (reinforced concrete), 0.95 (steel and prestressed concrete) | | | | |
| $\gamma_D$ | 1.20 | | | | |

Table 1 Proposed Load and Resistance Factors of Eq.(1) for Bridge Evaluation

# Incorporation of Quantitative Structural Assessments in Bridge Management Systems

## Évaluation structurale quantitative prise en compte dans les systèmes de gestion des ponts

## Einbezug quantitativer Tragwerksbeurteilungen in Brückenbewirtschaftungssysteme

**George HEARN**
Assistant Professor
University of Colorado
Boulder, CO, USA

**Dean M. FRANGOPOL**
Professor
Univ. of Colorado
Boulder, CO, USA

**Milan CHAKRAVORTY**
Research Assistant
Univ. of Colorado
Boulder, CO, USA

**A. Joseph SICCARDI**
Staff Bridge Engineer
Colorado Dept of Transp.
Denver, CO, USA

**Walter MYSTKOWSKI**
Bridge Management Eng.
Colorado Dept of Transp.
Denver, CO, USA

**SUMMARY**

Bridge management systems are assuming an increasingly important role in the planning of maintenance and repair operations. The expanding use of bridge management systems exerts an influence on many aspects of the operations of highway networks, and it is essential to integrate them with other operations. This paper outlines a broad effort in the integration of bridge management systems and structural engineering evaluations. The approach taken is one of a redefinition of condition data obtained in field inspections, an expansion of the content of field data, and the application of bridge management systems modelling capabilities to calibration of models of physical processes of deterioration.

**RÉSUMÉ**

Les systèmes de gestion des ponts jouent un rôle sans cesse croissant dans la planification des travaux d'entretien et de réparation. Cela influe sur d'innombrables aspects de l'exploitation des réseaux autoroutiers, d'où la nécessité de les intégrer dans d'autres applications. L'article esquisse les efforts d'intégration des systèmes de gestion des ponts avec l'évaluation des structures. Cette approche du problème consiste à redéfinir les données réelles à partir d'essais effectués sur le site et à prendre en compte l'aptitude de modélisation des systèmes de gestion des ponts pour étalonner des modèles de processus de dégradation physique.

**ZUSAMMENFASSUNG**

Brückenbewirtschaftungssysteme spielen bei der Unterhalts- und Reparaturplanung eine zunehmend bedeutendere Rolle. Dies wirkt sich auf viele Aspekte im Betrieb von Autobahnnetzen aus, und es ist wichtig, sie mit anderen Tätigkeiten zu integrieren. Der Beitrag skizziert eine umfassende Anstrengung zur Integration von Brückenbewirtschaftungssystemen mit der Tragwerksbeurteilung. Der Ansatz besteht aus einer Benutzung von Zustandsdaten aus Felduntersuchungen, einer inhaltlichen Erweiterung der Felddaten und der Kalibrierung der Modellierungsfähigkeit von Brückenbewirtschaftungssystemem am physikalischen Verfallsprozess.

## 1. STRUCTURAL ENGINEERING AND BRIDGE MANAGEMENT

Decisions about maintenance planning necessarily entail decisions about structural load capacity and structural safety. The preservation of the strength of bridges relies on the maintenance actions. Often, cost is the primary criteria applied by management systems in an automated optimization of maintenance programs. Other, quantitative measures of the condition of bridges, such as load capacity, often are not modeled explicitly in BMS. Safety constraints on maintenance programs are introduced separately and on a bridge by bridge basis.

A cost basis for optimization is compatible quantitative structural evaluations. Repair costs are a reasonable general indicator of structural health for a network of bridges [1], but are not reliable for assessment of individual bridges [2]. Costs can be small if only a small portion of a component needs repair. But if this small portion is in a critical location, it can correspond to a significant threat to structural safety. The recognition of safety constraints in BMS requires separate, specific computation and modeling of structural engineering evaluations.

### 1.1 Structural Engineering Evaluations

The structural engineering evaluations of interest in the planning of maintenance programs include present-day load capacity and structural reliability as well as an estimate of minimum likely load capacity and structural reliability within the planning horizon. Bridges that are today vulnerable or that may become vulnerable should be identified. The data needed for present-day evaluations of load capacity and reliability are strength of components (present-day remaining strength for members with deterioration) and load demand in components. Estimates of capacity at future times require, at a minimum, an estimate of the future strength of components, and may also recognize the potential for redistribution of loads under damage.

Load demand in components and the original strength of components are available from design computations. Data on present-day strength can be evaluated if there are adequate, quantitative descriptions of deterioration in components. Load capacity, then, is computed for known components strength and load demand. Since load demand depends on the location of a component within the bridge, it is necessary that data on deterioration in components identify the location of deteriorated portions of the component. Estimates of load capacity at future times is accomplished through the use of models of deterioration processes. Using models of processes, the growth in severity and extent of deterioration can be estimated, future (lessened) section properties are computed, remaining strength is computed, and evaluations of load rating and structural reliability can be performed.

### 1.2 Bridge Inspection

Inspection of bridges provides data on present-day condition of components. Bridge inspection is, in most instances, a visual inspection. Deterioration in components is reflected in qualitative condition rating values, and additionally as notes and sketches that the inspector prepares. Condition ratings are particularly important to automated procedures such as bridge management because the condition ratings form the electronic database that is employed directly for present-day evaluations, and that is modeled for estimates of expected condition ratings in the future.

There are two important aspects to condition ratings. First is the scope of the rating. The United States practice since 1970 has employed three ratings, one each for deck, superstructure and substructure, that are assigned during the inspection of a bridge. Each rating covers an assembly of large extent made up of many components. Second is the definition of rating values. US practice defines ratings by qualitative descriptions of the appearance of the assembly. The so-called 'condition state language' describes conditions as excellent, good, fair, poor, etc. But the language does not offer specific indication of the type of deterioration that may be present, and does not provide quantitative measures of the severity of deterioration. Newer, element-level bridge management systems being implemented in the United States employ an expanded set of condition ratings [3], but the condition state language remains a qualitative naming of good, fair and poor conditions.

### 1.3 Use of Condition Ratings in Bridge Management Systems

Bridge management systems interpret qualitative condition ratings in terms of repair needs. The condition rating values can be linked to the cost of repairs, and to the immediacy of the need. Trends in condition ratings over time can be modeled either as static models that respond to bridge age, traffic level and other variables [4], or as dynamic models that are regularly recalibrated against the record of condition ratings

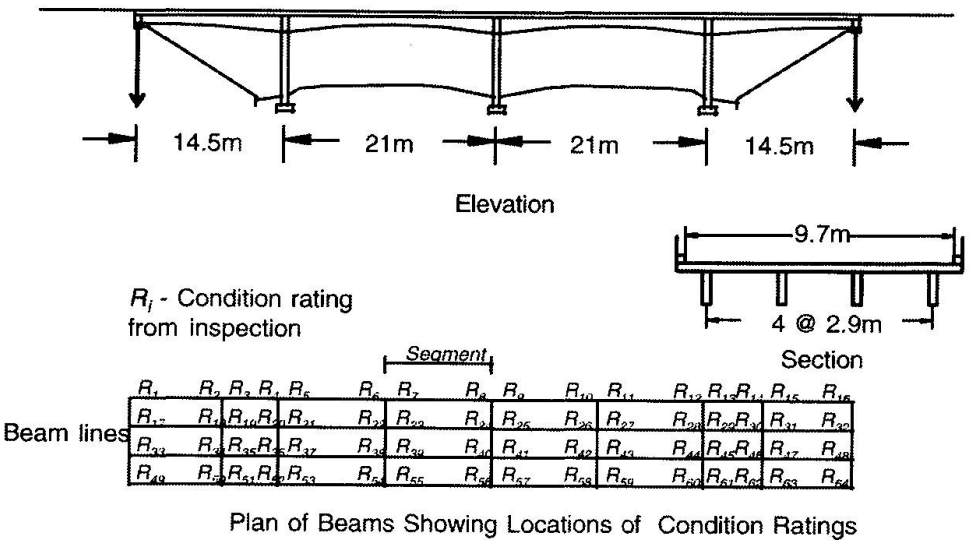


**Figure 1 - Beam Segments for Reinforced Concrete Bridge**

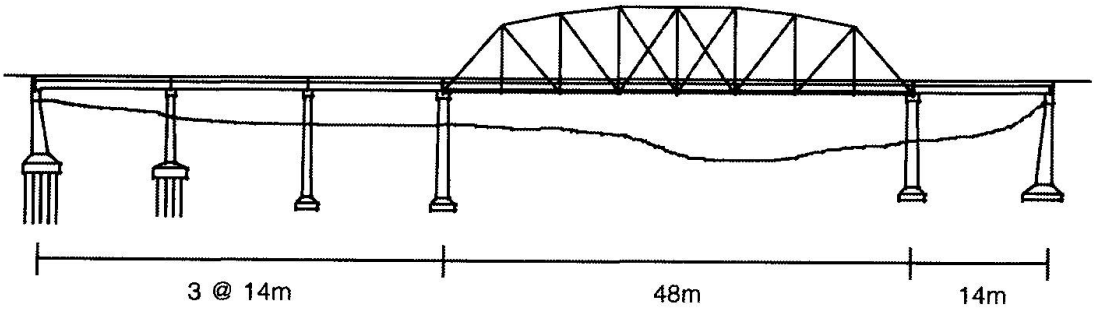


**Figure 2 - Truss Bridge Elevation**

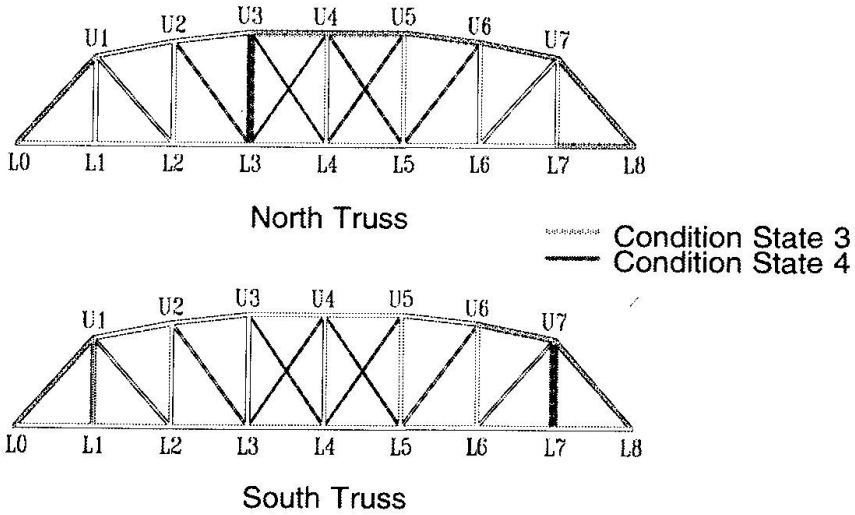


**Figure 3 - Condition States from Field Inspection**

for a network of bridges [5]. Dynamic models are particularly useful because they indicate the actual performance of a network of bridges. Models of condition ratings are identified, in BMS, as deterioration models. But since the condition ratings are qualitative, BMS models are not able to indicate the mechanisms of deterioration that are active in member, nor the location of deterioration, nor the severity of deterioration.

## 2. STRUCTURAL ENGINEERING EVALUATIONS IN BRIDGE MANAGEMENT SYSTEMS

Structural engineering evaluations such as load capacity require new quantitative forms of condition ratings, and require that condition ratings be linked to locations in a bridge. New quantitative condition rating scales are formed as discrete-value scales, a necessity for condition ratings used in routine inspection of bridges. Quantitative condition ratings are defined in terms of damage indices. Different damage indices are selected for different types of members. Condition ratings for steel members are linked to a damage index that expresses normalized thickness loss in parts. Reinforced concrete members employ damage indices linked to crack opening and spacing. Note that the use of a damage index for condition ratings is compatible with standardized reporting of precise data, such as thickness measurements by ultrasonic methods. These detailed data can be reported to the BMS database through the use of quantitative condition ratings.

Remaining strength of members is assessed as a reduction of original strength. The magnitude of the reduction is determined by the value of the damage index for the member [6]. Each condition rating value corresponds to a range of the damage index. This allows an unambiguous assignment of condition ratings during visual inspections. Of course, if a single rating value indicates a range of a damage index, then the remaining strength computed using the condition rating indicates a range of strengths. It is approximate. The pattern of deterioration is as important as the severity. For populations of similar components it is possible to identify standard patterns of deterioration [7]. The assumed patterns of deterioration can be augmented with other data if available [8].

The location of weakened members in the bridge is established in field inspections through a process of segment-based recording of condition ratings. Segments are portions or lengths of a member that can be readily identified by physical boundaries in the structure. For beams, segments are portions between diaphragm connections. For trusses, segments are individual truss members between panel points, etc. An example of beam segments for a four-span reinforced concrete bridge is shown in Figure 1. During inspection, each segment is assigned a quantitative condition rating. The completed inspection report indicates the distribution of condition ratings $R_i$ throughout the structure. Load ratings can now be assessed for each segment in the structure. The lowest load capacity among all estimates controls and is taken as the load capacity of the bridge. Together, quantitative condition ratings and segment-based reporting provide adequate data to support automated estimation of present-day load capacity within management systems.

Load capacity at future times is computed using estimates of future values of damage indices. Here, a direct use of existing BMS models for condition ratings are employed. Models are formed for quantitative condition ratings. Condition ratings are future times are estimated, and these future condition ratings are again used to compute the remaining strength of segments. In turn, load capacity is determined.

BMS models for condition ratings can also be used to determine parameters of models of deterioration processes [9]. Though discrete-valued condition ratings offer little precision in damage indices, the transition times for rating values for a population of bridge components is an adequately detailed representation of the deterioration process to allow the formation of models of deterioration mechanisms. This allows engineers to recognize the rates of deterioration in the network, and to examine the correlations between deterioration rates and exposure or service environment.

## 3. FIELD DEMONSTRATION

In the summer of 1994, inspections of eight highway bridges in Colorado were conducted using new quantitative condition ratings and segment-based reporting. The bridges included two steel beam bridges, one steel plate girder bridge, two steel truss bridges, a timber beam bridge, one reinforced concrete continuous beam bridge (and two approach viaducts of reinforced concrete spans at two of the steel bridges), and a prestressed concrete beam bridge. For each bridge, segments were identified and inspection forms were prepared. Quantitative condition states were established separately for steel members, for reinforced concrete members, for prestressed concrete members, and for timber members. Quantitative condition ratings were chosen to correspond to R Codes (rust severity codes) for steel elements, and to S Codes (spall / ero-

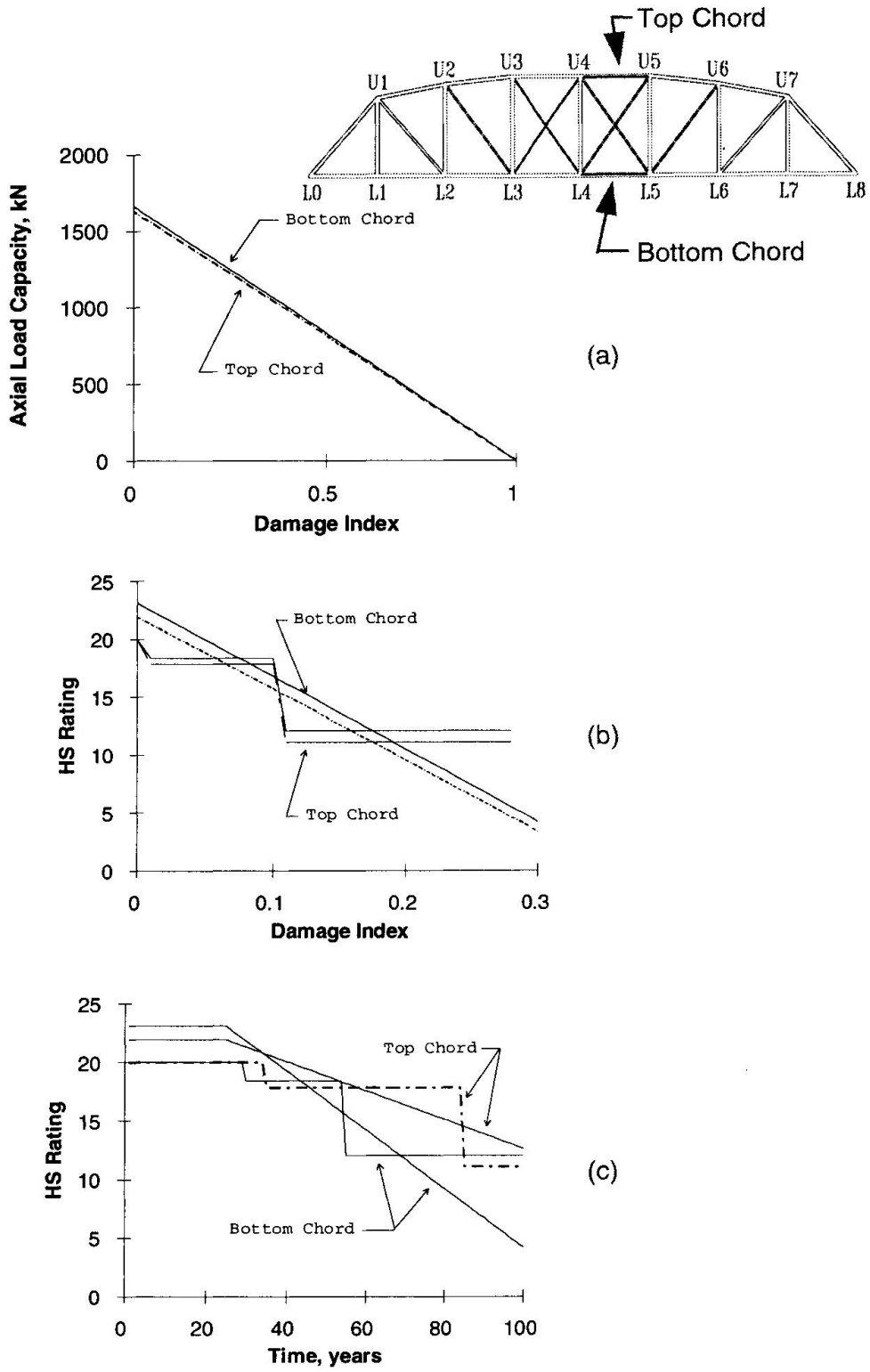


Figure 4 - Load Capacity Evaluation for Truss Bridge

sion severity codes) for concrete elements. R and S Codes are an established reporting basis for Colorado DOT inspectors.

### 3.1 Example: Load Rating of a Steel Truss Bridge

An example of load rating of a steel truss bridge is considered. Figure 2 shows an elevation of a simple thru truss with a span of 48 m. The bridge is more than sixty years old. Today, it carries a single lane of traffic, but could carry two lanes if required. Truss members are riveted, built-up members. Most are pairs of channels connected by flat lacing bars. The bridge has simple reinforced concrete approach spans.

The bridge is in good condition. There is minor surface rust and some pitting on truss members. Inspection of the bridge included all components of the deck, superstructure, and substructure in both the truss span and the approach spans. This example will consider the trusses only.

Quantitative condition ratings were assigned to all truss members. The rating scale used here is a 5-valued scale. Rating 1 is perfect condition. Higher rating values indicate poorer condition. Figure 3 shows the two trusses, with members in condition ratings 3 and 4 highlighted. These are the members with the poorest condition in the trusses. The relation of between condition rating and remaining strength is shown in Figure 4(a) for one top chord and one bottom chord member. Each chord in the truss can be given a unique damage / strength curve since the damage index is itself a normalized measure of deterioration. Only condition ratings 4 and 5 indicate a loss in member strength.

For these same two truss chords, the HS live load ratings are plotted as a function of damage index in Figure 4(b). The smooth curves are the exact results for load ratings computed for known (precise) damage indices. The stepped curves are the HS ratings that would be assigned on the basis of quantitative condition ratings. Load capacity computation using condition ratings is approximate, but vulnerable structures can be identified.

Plot (c) in Figure 4 shows the HS ratings as a function of time for an assumed set of deterioration rates. Bottom chord members typically corrode more quickly than top chords. Here for assumed corrosion rates, it is seen that the load rating of the truss is at first controlled by the capacity of the top chord, but is later controlled by the bottom chord as deterioration advances. The deterioration models used here would be obtained from the larger historical database of condition ratings observed in all members in similar exposure classes.

## 4. CONCLUSION

Structural engineering evaluations can be made a part of the automated evaluations in management systems through the introduction of quantitative condition ratings and an enhanced practice of recording for field inspections. Estimates of load capacity obtained from condition ratings are approximate, but vulnerable structures can be identified and an evolution in controlling members or in modes of failure over time can be recognized. Models of deterioration mechanisms can be formed using quantitative condition ratings. Segment-based reporting can support the classification of members by exposure for more accurate modeling of deterioration. The methods proposed here are being demonstrated in an ongoing project conducted with the Colorado Department of Transportation.

## REFERENCES


1. Al-Subhi,K.M., Johnston,D.W., and Farid,F. (1989). "Optimizing system-level bridge maintenance, rehabilitation, and replacement decisions." North Carolina DOT, FHWA/NC/89-001, Raleigh, NC, 274 p.
2. Cesare,M., Santamarina,J.C., Turksta,C.J., and Vanmarcke,E. (1993). "Risk-Based Bridge Management." ASCE Jou Transportation Engrg. 119(5) 742-750.
3. *Pontis User's Manual Version 2.0* (1993). USDOT Federal Highway Admin., Office of Tech. Applic., FHWA-SA-93-083, Washington, D.C., 357 p.
4. Allen,G.R., McKeel,W.T.,Jr. (1989). "Development of performance and deterioration curves as a rational basis for a structures maintenance and management system." Proc. Sixth Annl. Intl. Bridge Conf., IBC-89-17, Pittsburgh, PA.
5. Thompson,P.D., Shepard,R.W. (1994). "Pontis." Nat. Res. Cncl., Trans. Res. Circ. No. 423, Washington, D.C., 35-42.
6. Hearn,G., Frangopol,D.M., Chakravorty,M. (1994). "Towards structural strength and safety evaluations within bridge management systems." ASCE Struct. Cong. XII, N.C.Baker, B.J.Goodno, eds., Atlanta, GA. 290-295.
7. McCrum,R.L., Arnold,C.J., Dexter,R.P. (1985). "Current status report: Effects of corrosion on unpainted weathering steel bridges." Rpt. R-1225, Michigan Trans. Comm., Lansing, MI.
8. Lauzon,R.G., and Sime,J.M. (1994). "Connecticut's bridge management information system." Nat. Res. Cncl., Trans. Res. Circ. No. 423, Washington, D.C., 81-86.
9. Hearn,G., Frangopol,D.M., Chakravorty,M. (1994). "Quantitative deterioration modeling for highway bridges." Proc. IV Conf. on short and medium span bridges., A.A.Mufti, B.Bahkt, L.G.Jaeger, eds., Halifax, NS, 397-408.

# Identification of the Computational Model of a Drawbridge Span

Identification du modèle mathématique de la travée d'un pont-levis

Identifikation des Berechnungsmodells vom Feld einer Zugbrücke

**Jerzy DOROBCZYNSKI**
Associate Professor
Techn. Univ. of Szczecin
Szczecin, Poland

**Jan A. KARCZEWSKI**
Professor
Warsaw Univ. of Technology
Warsaw, Poland

**Witold M. PACZKOWSKI**
Senior Lecturer
Techn. Univ. of Szczecin
Szczecin, Poland

Jerzy Dorobczynski, born in 1927, received his civil engineering degree at the Technical University of Szczecin. For more than 35 years he has been working on the analysis of the real behaviour of steel bridges.

Jan Karczewski, born in 1937, received his civil engineering degree at the Warsaw University of Technology. For more than 30 years he has been involved in special problems of steel structures in civil engineering.

Witold Paczkowski, born in 1953, received his civil engineering degree at the Technical University of Szczecin. Since more than 15 years his research themes are optimisation and structure identification.

## SUMMARY

The paper presents the tensometric measurement results for a drawbridge span. These measurements were done before and after modernisation of the bridge. They provided the basic data for the mathematical model of a span using the identification method compared with the real object. They were also useful in a process of reconstruction and rectification during the assembly of the span.

## RÉSUMÉ

L'article présente les résultats d'essais extensométriques de la travée mobile d'un pont-levis. Les essais ont été effectués avant et après une modernisation du pont. Les résultats obtenus ont servi à la création d'un modèle mathématique de la travée par la méthode de l'identification avec un objet réel. Ces résultats servent aussi de base pour l'introduction des modifications avant et pendant la construction.

## ZUSAMMENFASSUNG

Es werden die Ergebnisse der Tensometeruntersuchungen vom Feld der Strassenzugbrücke dargestellt. Die Untersuchungen wurden vor und nach der Modernisierung der Brücke durchgeführt. Die gewonnenen Ergebnisse dienten der Erstellung eines Berechnungsmodells des Feldes mittels der Methode der Identifikation mit dem realen Objekt. Sie wurden auch zur Grundlage der Einführung von Konstruktionsänderungen und Berichtigung des montierten Feldes benutzt.

## 1. INTRODUCTION

The real behaviour of a structure often differs from the assumed designer's model. Especially in the structures that exist for dozens of years, it can be a result of some new functions that those structures care, the simplification of the computational model as well as changes that were done during erection. It has been well proved in some tensometric analysis of a drawbridge span, and seems to be one of the basic forms for the bridge model verification.

The object of this research will be a span of the road bridge on Dziwna river, one of the arms of Odra river. There was a temporary bridge made of steel and wood with one draw span erected in the fifties. After thirty years of using there were some restrictions put, connected with the mass and velocity of passing by dump trucks. It was a result of a wear of wood span elements and timber piles on which the fixed bearings were founded. In 1978 there were tensometric testing and model identification analysis carried out for one drawbridge span [1]. In 1990-94 the bridge was rebuilt and put in the line of old bridge axis. The fixed part of a bearing structure are made of continuous reinforced beams. The draw span was modernized during the reconstruction too. Leaving the main girders made of rolled steel joists intact, the bridge deck and pedestrian pass were widened. It was made as a new orthotropic platform. Fig. 1 shows the cross sections of the draw span before (d) and after modernization (e). Because of a greater load of the moving span, the lifting gear had to be strenghten, i.e. the extractor trusses and hangers. The hangers got adjusting bolts to simplify both assembly and rectification of the extractor system. After the assembly, the geodetic surveying showed that the planes perpendicular to the upper and lower pin axis were not planar. The big stresses in the hangers involved the designing of some additional hinges in span - hanger connection. After the new connections had been made, the tensometic tests were done again.

## 2. PRIOR TO BRIDGE MODERNIZATION TESOMETRIC TESTS

Fig. 1b shows the horizontal projection of a draw span prior to modernization. The bearing structure is made of seven steel girders crosswise braced. Its two hangers are made of 2 I NP 140. There is a crosswise put plate girder. Both bridge floor, platform and traverses are made of wood.

For the static trial loading the 120 kN lorry was used. Fig. 1f shows the dimensions and loads. There were 9 load schemes under analysis, for which the position of the lorry wheel and the direction of the lorry move shows fig. 2. It was done to receive the maximal stress in the side and middle main beam. The stresses were measured by a resistance wire strain gauge [2]. The tensometers RL 120/20 (k=2.15) were fixed to the elements under investigation with the chemo-hardening glue. The measuring and compensational tensometers were connected with the Hottinger electric bridge UPM 60 by the 20 m long ekranized cables. Fig 1b. shows the topology and numbering of the tensometers. There were two cycles of analysis with the lifting of the bridge between, made by the weather permitting.

## 3. THE IDENTIFICATION OF THE DRAWBRIDGE ELASTIC SUPPORT

Identification is understood as a procedure aimed at creating the system structure and parameters of its mathematical description which lead to the formulation of a mathematical model based on the data concerning the response of the system to a certain input signal [1,3]. The paper analysis the parametric identification method for static characteristic of a structure. The best possible mathematical model in a sense of some known parameters leads to the functional minimum:

$$J = J[e(\mathbf{x})] = J[y - y(\mathbf{x})] = \sum_{i=1}^{n} [y_i - y_i(\mathbf{x})]^2, \tag{1}$$

where $\mathbf{x} = [x_1, \ldots, x_n]^T$ vector of parameters under consideration, $e(\mathbf{x})$ acceptance deviation of model equation, a difference between input values measured $y_i$ and the corresponding computational model response $y_i(\mathbf{x})$.

The choice of the criterion of compatibility between mathematical model and real object seems to be the basic element of identification problem solution by eq. (1). In this paper the classical criterion of least squares method is taken under consideration.

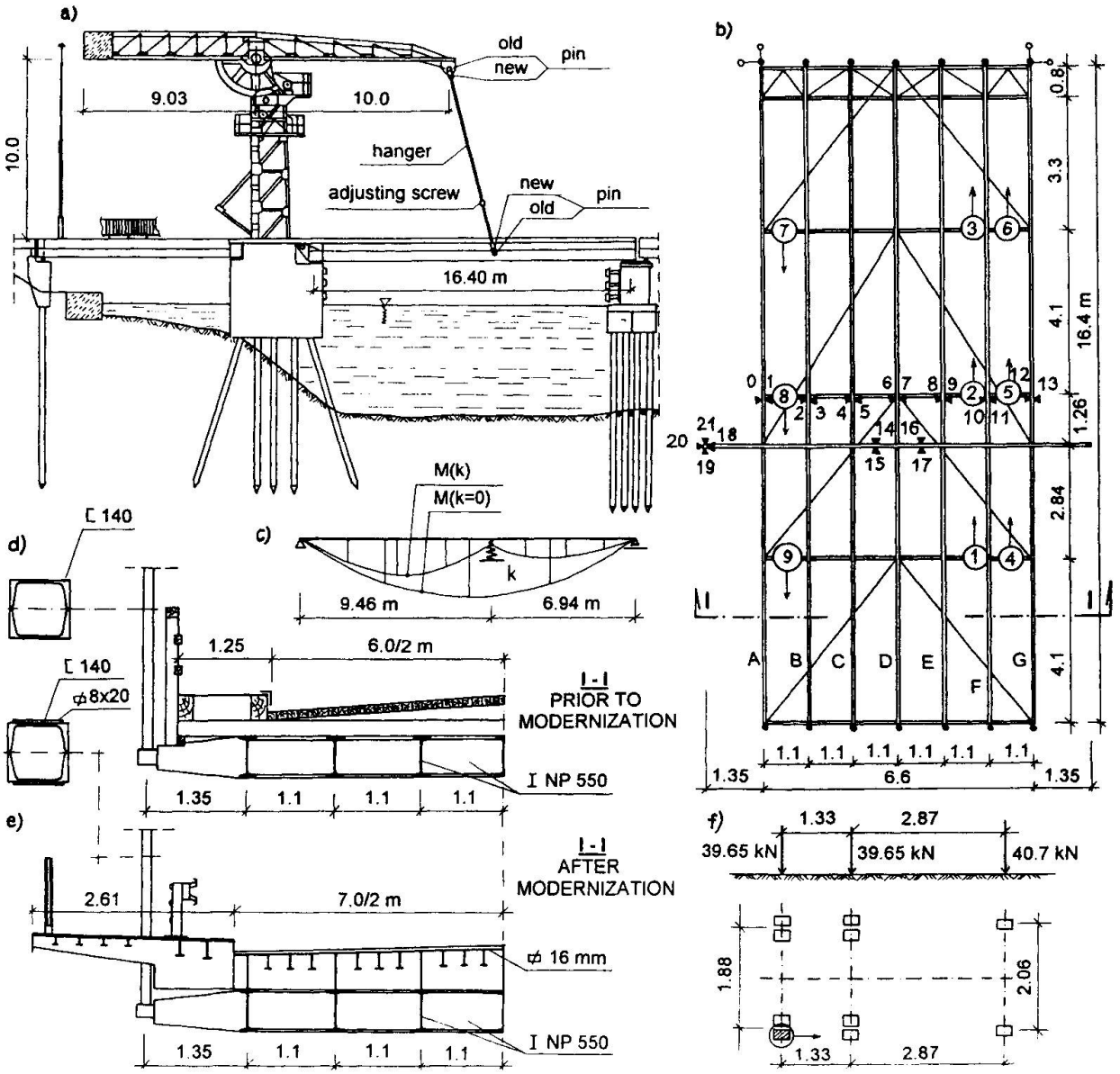


*Fig. 1 Bridge construction scheme prior to modernization and after modernization*

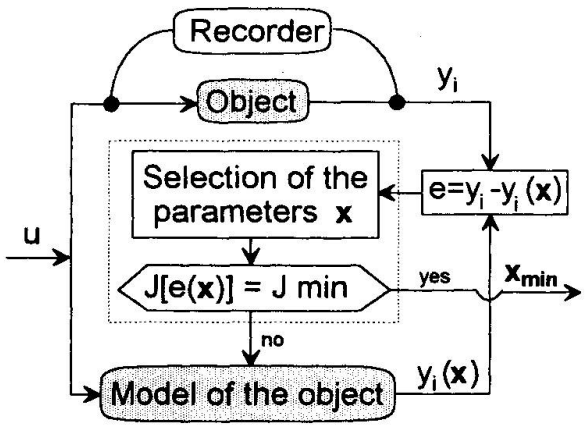


*Fig. 2 The identification procedure algorithm*

The identification process goes as follow (fig.2):

- recording the input signal u (experimental load) and output signal $y_i$ (displacements, stresses),
- creating the structure model in which changes of the structure parameters identified **x** are possible within a feasible region,
- comparing the registered signals $y_i$ and the corresponding model inputs $y_i(\mathbf{x})$ computed theoretically,
- selecting the identification variables **x**, to have the deviation error equal 0 or minimum in the sense of the criterion under account.

During the tests it came out, that the turning off the lifting gear with the span being lowered ca. 1 m over the stationary support was creating

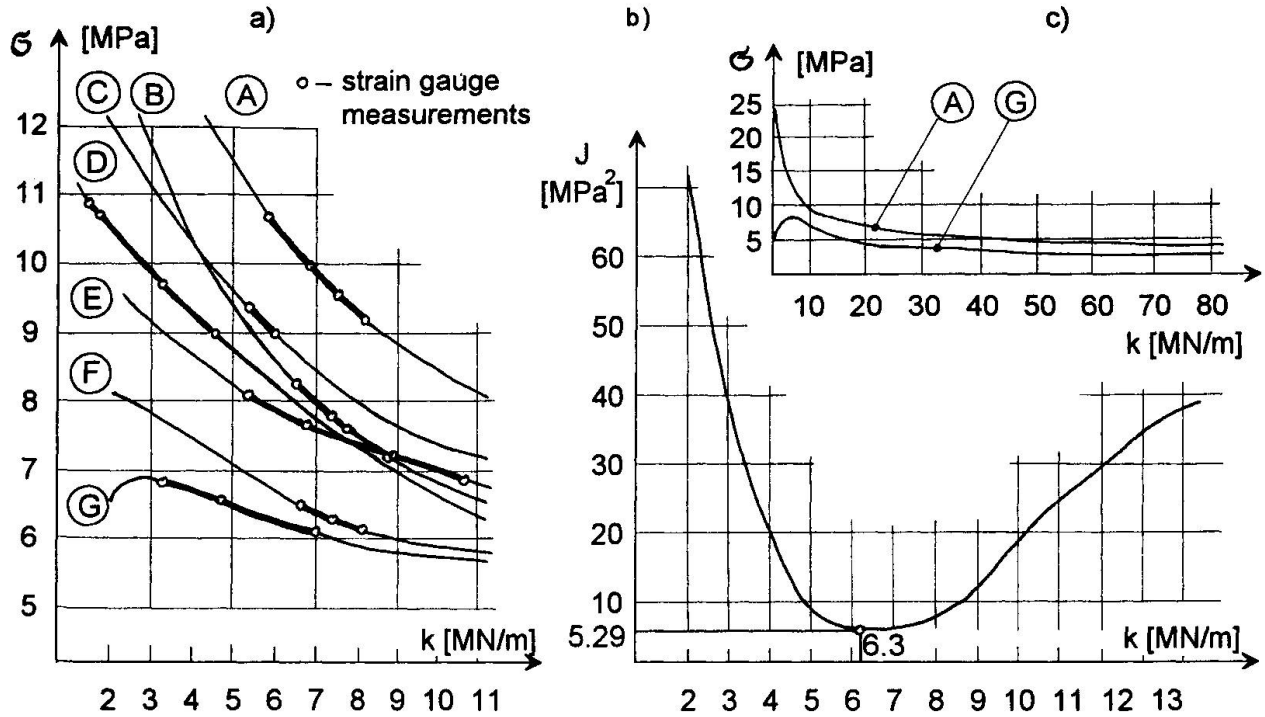


*Fig. 3 Stresses in the main beams (a, c) and the deviation function e(k) (b)*

the elastic support in the line of the hangers. The parameter k of that support was taken as one of **x**-parameters and was identified by the identification analysis. The static calculation by STRAINS-system [4] involved a grid model of a bridge. Fig. 3a shows stresses in main beam cross-sections in which were fixed tensometers. The stresses were defined within the whole range of k-values $k \in <0, \infty)$.Certain curves representing stresses were supplemented with values of measurements provided that the deviation e =0. That makes possible to define a narrow range of the identified factor variation $k \in <2, 11\ MN/m>$. The identification analysis looks for such an elastic factor $\hat{k}$ which gives a minimum of a J(k) over a set X

$$J(\hat{k}) = \max_{k \in X} \sum_{i=0}^{21} [e_i(k)]^2 = \max_{k \in X} \sum_{i=0}^{21} [\sigma_i - \sigma_i(k)]^2, \qquad X = \{k : 2 \le k \le 11\ MN/m\}, \qquad (2)$$

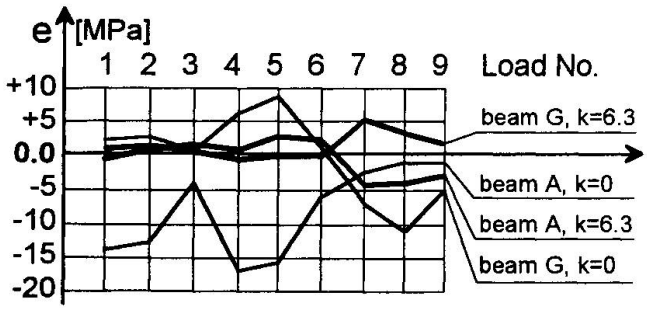


*Fig. 4 The differences between theoretical and existing stresses*

where

$\sigma_i$ - stresses at measuring section, obtained by tensometric analysis,

$\sigma_i(k)$ - stresses of the same section received theoretically.

The elastic factor k, that minimize function (2) was evaluated by the controlled enumeration method. Fig. 3b shows the function J(k). For the optimal k = 6.3 MN/m and k =0 (no support) there were the differences of stresses both the theoretical and measured ones evaluated for two side beams A and G with 9 load sets (fig. 4).

## 4. THE ANALYSIS OF HANGERS DURING MODERNIZATION

There were evaluated the increments of normal stresses in hangers during the lowering process of the span without the deck. The span was risen with hydraulic jacks set on the bearing top plate. The measure points were set on the cross-section plane to main axis (fig.5).

The used strain gauge set lets to determine in an analysed cross-section, normal forces and bending moments. For the stresses from the set of a dozen or so both rising and lowering of a span there were stresses P and moments $M_x$, $M_y$ computed. The results shows table 1.

| BN - bridge with no deck<br>W - without adjusting by a screw<br>A - after adjusting | Left hanger | | | | | | | Right hanger | | | | | | |
|---|---|---|---|---|---|---|---|---|---|---|---|---|---|---|
| | $\sigma_P$ | $\sigma_{Mx}$ | $\sigma_{My}$ | $\sigma_{max}$ | P | $M_x$ | $M_y$ | $\sigma_P$ | $\sigma_{Mx}$ | $\sigma_{My}$ | $\sigma_{max}$ | P | $M_x$ | $M_y$ |
| | MPa | | | | kN | kNcm | | MPa | | | | kN | kNcm | |
| BN W | 21.5 | 15.5 | 9.5 | 46.5 | 129 | 376 | 195 | 33.5 | 20.5 | 15.5 | 69.5 | 201 | 497 | 319 |
| BN A | 23.7 | 23 | 13.5 | 60.2 | 142 | 558 | 278 | 23.7 | 16.5 | 6 | 46.2 | 142 | 400 | 123 |
| Phase I | 63.9 | 11 | 1 | 79 | 383 | 267 | 21 | 56.4 | 12.8 | 10 | 78.5 | 338 | 309 | 206 |
| Phase II | 1.8 | 1 | 1.5 | 3.5 | 10 | 24 | 31 | 2.5 | 1.5 | 4.5 | 8.5 | 15 | 36 | 92 |

*Table 1. Stresses and forces in hangers*

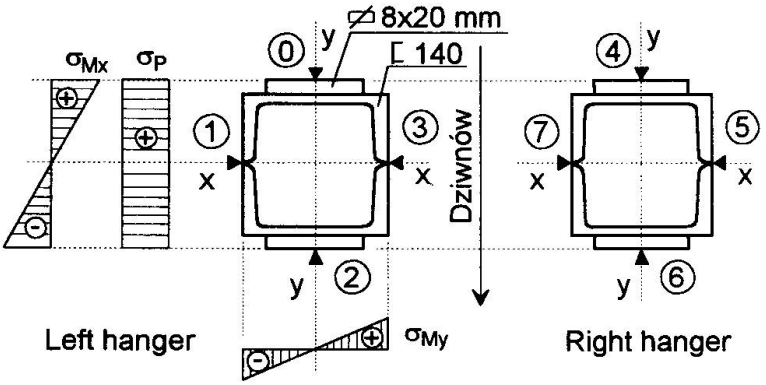


*Fig. 5 The set of tensometers and stresses in hangers*

The results show the existence of greater bending influence for left hanger. The displacement of rotary planes for left and right hangers were respectively 60 mm and 20 mm. The bending existing in the rotation plane shows the lack of free rotation in the bearing. From the set of data in table 1 it may be concluded that the lack of a free rotation in the hangers bearing increases the stresses up to 100% comparing to the stresses from the normal force. And the total stress of normal forces and two-dimensional moments, measured in cross section corner is increased by 150%.

The additional stresses being the result of a hanger bending equal $\sigma_M = 6EJ_y\Delta/w_yL^2 = 52$MPa. The computational and analytical results shows, that the hanger's stresses of 70 MPa, rise to $2.5 \bullet 70 + 52 = 227$ MPa because of bending and assembly imperfections. The connecting of the span and the hanger was decided to be remodelled. There were two additional joints put to guarantee a free rotary according to y-axis. The above-mentioned solution released the axis fixing being a result of some friction of pins and some prebending during the assembly.

## 5. THE ANALYSIS OF HANGERS AFTER MODERNIZATION

After the modernization three phases of tensometric analysis were set. They involved (for hangers):

- in phase 1 stresses from the increased load of span with deck,
- in phase 2 analysis of the rising, lowering and trial loading influences,
- in phase 3 stresses in dynamical states being a result of lowering and rising and also of moving the load.

The tensometric bridges UPM 60 go for static, and DMC 9012 for dynamic measurements were used [2]. The hanger's cross sections were chosen behind the additional bearings ca 30 cm over road surface (fig. 5). In the phase 1 the stresses after the hanger's regulation and setting were measured. The counterbalance was supported on a scaffold. The deck was rised by hydraulic jacks to a level of 60 cm. The counterbalance moved up ca 20 cm after the lowering of the span. Table 1 shows the greatest stresses noted before the total lowering of a span. The mean stresses measured in the left hanger were 64 MPa, and in the right one 57 MPa. It comes to a force of 383 kN and 338 kN respectively. A little of bending ca 10 MPa existed in hangers too.

The trial load for phase 2 consisted of two tipper tracks of A=288 kN and B= 271 kN live load respectively. When the resultant load of a rear axis of a truck follows the line of the jointed connection of a span and hanger, the maximum force in a hanger can be measured. For the trucks put in the middle line of a bridge, to the left and right pavement line, and parallel to each other there were the statical measurements done. Those measurements were done by some and none gear clearances. The dynamic measurements were done by the truck A moving with the speed of 20, 40, 60 kN/h, and by lifting and lowering of a span with rapid braking.

The live load has no meaning concerning the hanger's stresses, no matter where put, and no matter how big it can be. The additional stresses they result are no more than 3 MPa. It is the

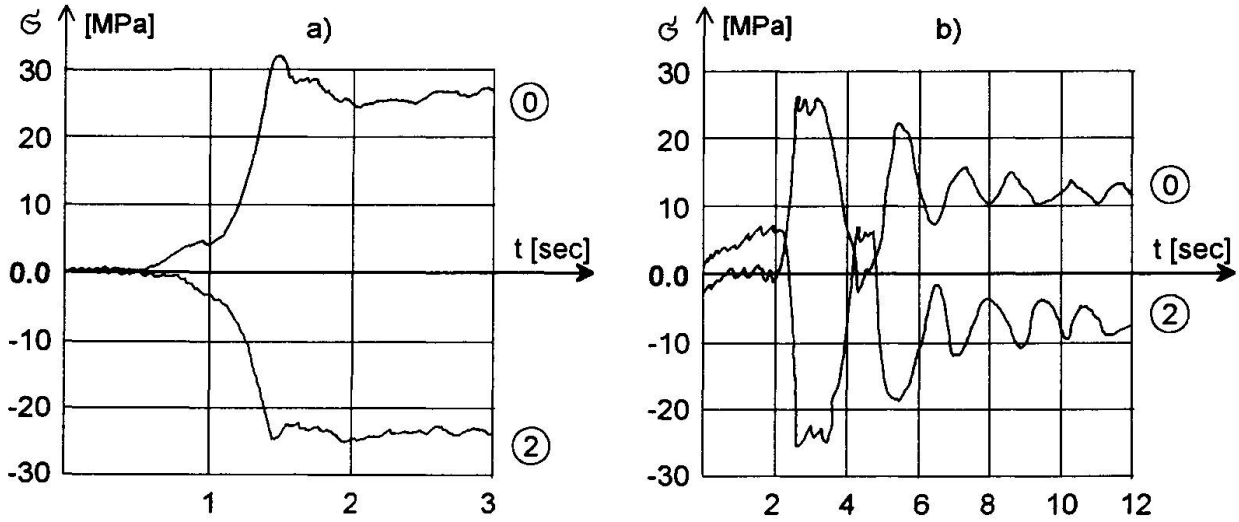


*Fig. 6 The results of the dynamic analysis*
*a) when rising, b) when lowering and braking of a span*

result of some additional joints between span and hangers added and the properly balance counterweight the bigger stiffness of a drawspan after modernization can help too.

The lifting and lowering of the span are resulting in some additional hanger's forces i.e. 15 kN by static and 24 kN by dynamic move. It gives respectively 2.5 MPa (table 1) and 4.0 MPa. The important phase of raising or braking results in bending moments in a rotary plane of a span. The additional stress caused by above mentioned action equals 31 MPa. The stresses versus time plots when lifting or lowering the span for tensometers 0 and 2 are shown on Fig. 6.

## 6. FINAL NOTES

The tensometric measurements of a real structure is a very useful base for the verification of the real work of some elements. The real object is always more complex than its mathematical model. The identification procedure seems to be a proper tool for the verification of some structures behaviour parameters and some still ignored parameters because of the lack of information.

The analysis of a bridge had permitted a limited exploatation in the years of 80-ies. It shoved the need for reconstruction in 1990-94 and was a base for a proper geodetic rectification of hanger's and for proper loading of a drawspan counterweight.

## REFERENCES

1. Dorobczyński J., Niczyj J., Paczkowski W. M., Application of identification to the determination of design model parameters of bridge structures. Enging.Transactions, Polish Academy of Sciences, Vol. 39, No. 3-4, 1991, pp.419-435.
2. Hoffmann K., An introduction to measurements using strain gauges. Hottinger Baldwin Messtechnik GmbH, Darmstadt, Germany, 1991.
3. Mańczak K., Nahorski Z., Computer identification of dynamic objects. [in Polish], PWN, Warsaw, Poland, 1983.
4. Gryszkiewicz M., User manual of mikro-STRAINS system. [in Polsh], Percomp, Warsaw, 1983