Zeitschrift: IABSE reports = Rapports AIPC = IVBH Berichte
Band: 68 (1993)

Artikel: Automatic knowledge acquisition and economic evaluation
Autor: Wang, Lianzi / Xu, Yang
DOI: https://doi.org/10.5169/seals-51841

Nutzungsbedingungen
Die ETH-Bibliothek ist die Anbieterin der digitalisierten Zeitschriften auf E-Periodica. Sie besitzt keine Urheberrechte an den Zeitschriften und ist nicht verantwortlich für deren Inhalte. Die Rechte liegen in der Regel bei den Herausgebern beziehungsweise den externen Rechteinhabern. Das Veröffentlichen von Bildern in Print- und Online-Publikationen sowie auf Social Media-Kanälen oder Webseiten ist nur mit vorheriger Genehmigung der Rechteinhaber erlaubt. Mehr erfahren

Conditions d'utilisation
L'ETH Library est le fournisseur des revues numérisées. Elle ne détient aucun droit d'auteur sur les revues et n'est pas responsable de leur contenu. En règle générale, les droits sont détenus par les éditeurs ou les détenteurs de droits externes. La reproduction d'images dans des publications imprimées ou en ligne ainsi que sur des canaux de médias sociaux ou des sites web n'est autorisée qu'avec l'accord préalable des détenteurs des droits. En savoir plus

Terms of use
The ETH Library is the provider of the digitised journals. It does not own any copyrights to the journals and is not responsible for their content. The rights usually lie with the publishers or the external rights holders. Publishing images in print and online publications, as well as on social media channels or websites, is only permitted with the prior consent of the rights holders. Find out more

Download PDF: 07.01.2026

ETH-Bibliothek Zürich, E-Periodica, https://www.e-periodica.ch

Automatic Knowledge Acquisition and Economic Evaluation
Acquisition automatisée des connaissances et valeur économique
Automatisierter Wissenserwerb in Wirtschaftlichkeitsstudien

Lianzi WANG
Associate Professor
N. Jiaotong Univ.
Beijing, China

Yang XU
Lecturer
N. Jiaotong Univ.
Beijing, China

Lianzi Wang, born 1933, graduated at Tangsban Jiaotong Univ. 1955. At Northern Jiaotong Univ. she is responsible for automatic application in design of railway by computer.

Yang Xu, born 1961, got his BS degree in computer science at the Beijing Computer Inst. in 1985, and his MS degree in engineering economics at the Northern Jiaotong Univ. in 1991.

SUMMARY
The paper is intended to describe the method for automatic acquisition of knowledge by way of a neural network to be applied in the economic evaluation of railway construction or upgrading projects. Based on the features of knowledge structure and knowledge system in the field of engineering economics, the necessary analysis and modification of a typical neural network model, with regard to the structure and algorithm are carried out, leading to a package of networks and algorithm suitable for engineering economic analysis. This paper also describes in depth the new type expert system which combines the neural networks with the expert system in this regard.

RÉSUMÉ
L'article propose une méthode d'auto-apprentissage des connaissances par le biais d'un réseau neuronal, développé pour les calculs de rentabilité dans les projets de construction ou de modernisation de chemins de fer. A partir des caractéristiques de structures et de systèmes de connaissances dans le domaine de la rentabilité, un réseau neuronal typique est analysé et modifié tant en structure qu'en algorithme, jusqu'à faire apparaître un progiciel de réseaux et d'algorithmes pouvant être appliqué dans les calculs de rentabilité. Les auteurs décrivent en outre un nouveau système expert dans lequel les réseaux neuronaux ci-dessus ont été mis en application.

ZUSAMMENFASSUNG
Es wird eine Methode des selbsttätigen Lernens in einem neuronalen Netzwerk vorgestellt, die für Wirtschaftlichkeitsberechnungen von Eisenbahnprojekten entwickelt wurde. Aufgrund von Struktur- und Systemmerkmalen des ingenieur-ökonomischen Wissens wird ein typisches neuronales Netzwerk hinsichtlich Struktur und Algorithmus analysiert und modifiziert, bis ein Paket zum Einsatz bei Wirtschaftlichkeitsberechnungen entsteht. Der Beitrag beschreibt ferner ein Expertensystem, in das solche neuronalen Netzwerke implementiert wurden.

1. INTRODUCTION

Economic evaluation is the essential factor in the overall assessment of a railway construction project. It involves not only the quantitative computation but also qualitative experience. For the latter case, it is rather difficult to describe by direct use of a mathematic model. But anexpert system can fulfil the task of both, i. e. to carry out the qualitative analysis based on the experience of the expert and the quantitative computation through the procedural knowledge, which can be best suited to the economic evaluation.

There are many evaluation methods available for the economic evualaltion of the railway construction projects. The diversification of the methods often leads to a lot of troubles to the summing—up of the experience of the experts as well as the review of the laws [1].

Neural network is a functional structure of wide applications. It can simulate systems with very complicated properties. By using computer as a means to substitute manual labor and based on standard algorithms, it can summarize and acquire the necessary knowledge and laws through the immense existing samples [2]. The combination of neural network with expert system for the economic evalution of railway construction projects can play a great role in the simplification of the system reasoning mechanism and the constant updatiang of the knowledge base.

2. ANALYSIS OF DOMAIN KNOWLEDGE STRUCTURE [2]

Presently there are available many types of neural network. Only careful analysis is made to the various neural networks, can a suitable neural network model be selected.

2. 1 Classification of domain knowledge

The domain knowledge can be classified into the following according to the system processing methods:

2. 1. 1 procedural knowledge

This kind of knowledge generally involves certain defination formulars, theorectical equations or emperical formulars. It is represented by procedure or functions in the programs.

2. 1. 2 Reasoning expert experience knowledge

It is the typical type of expert experience knowledge. It is represented generally by the way of " IF. . . THEN. . . "

2. 1. 3 Evaluation type expert experience knowledge

This type of knowledge is generally based on a set of evaluation criteria with the support of the expert experience for the selection of the most suitable conclusion. Different from the previous one, it is rather by refering to the existing evaluation samples or the results of analysis through certain mathematic methods than the direct acquisition from the experts for the summing—up, analysis and conclusion.

2. 2 System structure of domain knowledge

And the economic evaluation of a railway construction project must be based on the objective facts as well as the objective environment to determine the input and output of the project. Then a series of evaluation criteria is obtained accordingly, by which the final evaluation conclusion is drawn.

It is seen that we can draw such a conclusion: The domain knowledge structure for the economic evaluation of the railway construction projects is that of a hieracy structure, which can be shown in Fig. 1.

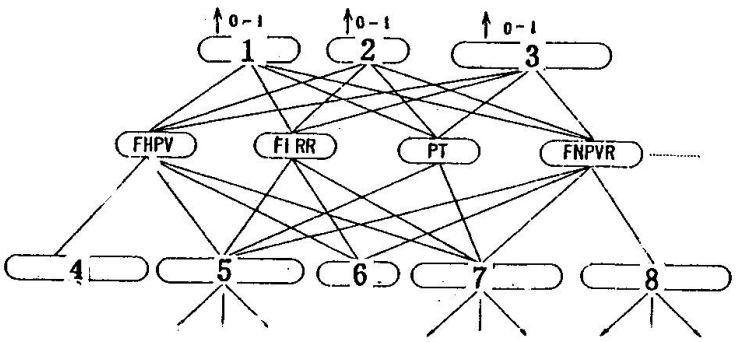

1. Evalnation conclnsion
2. Lmmediate construction
3. Postponement not necessary
4. Rate of discount in dynamic recovery
5. Cash in flow
6. Calculation period
7. Cash out flow
8. Present value of investment

Fig. 1

3. IMPROVED B—P MODEL FOR ECONOMIC EVALUATION

In view of the above mentioned domain knowledge structure, we selected a similarly—structured neural network, i. e. the B—P (Back—Propagation) Model and made certain necessary modifications accordingly so as to best suit the actual conditions.

3. 1 The B—P Model is a multi—hieracy network structure [3][4][5][6].

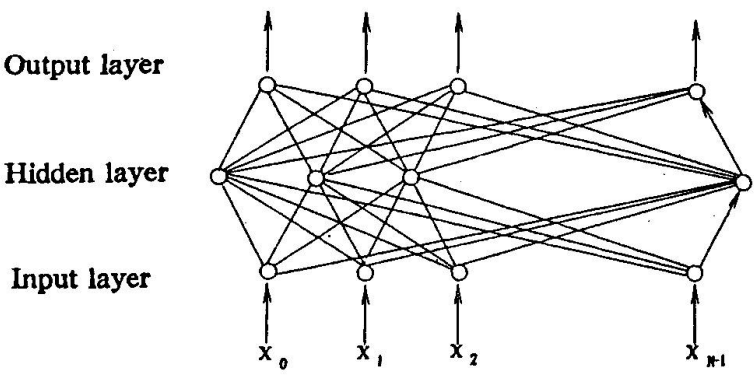

Fig. 2

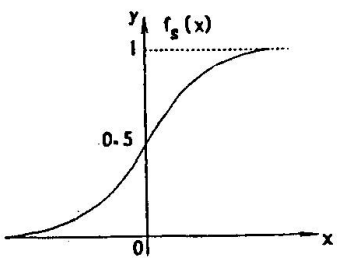

Fig. 3

Perfect unidirectional connection is done between adjacent layers (Fig. 2). It has input and output nodes as well as hidden nodes. The input value has to be transmitted to the hidden nodes first for processing through the activation function and then the output information is further transmiteted to the next hidden nodes layer by layer until to the output nodes. (The hidden nodes probably consist of more than one layer.) The output value is formed at the output nodes. The activation function se-

lected for the various nodes are shown by the S—functions in Fig. 3.

$$f_s(x)=\frac{1}{1+\exp(-x)}$$

The learning process of a network is that in which the error is reduced while back—propagating. The error function for the Pth sample is shown as follows:

$$E_p=1/2\sum(t_{pj}-O_{pj})^2$$

where tpi, Opj are respectively the expected output and the actual output for the Pth sample. The purpose of the weight correction is to reduce the error function. Therefore we selected the gradient descent method of the optimization theory so as to reduce the weight value of the network in the direction of Ep gradient.

$$\Delta PW_{ji}\infty\frac{\partial E_p}{\partial W_{ji}}$$

The computation for the weight correction is shown as follows:

$$\Delta PW_{ji}=\eta\delta_{pj}O_{pj} \quad \text{When Opj is a hidden node,} \quad \delta_{pj}=f_s'(net_{pj})\sum\delta_{pR}W_{Rj}$$

And when Opj is a output node, $\delta_{pj}=f_s'(net_{pj})(t_{pj}-O_{pj})$

For the above equations, Wji is the weigh value for connection between the ith node and the jth node of the upper layer. Opj is the output of the jth node, in which $net_{pj}=\sum W_{ji}O_{pi}$ is the information sum received at the jth node, δ_{pj} is the output error at the jth node, and $\eta>0$ is the gain.

For this type of models, due to the existence of the hidden nodes which are equilavent to the introduction of immense adjustable parameters in the model, the capability and flexibility of the model is greatly enhanced. The following theorem is developed:

If the hidden nodes could be set up arbitrarily, then the network with the three—layer S—function may approximate to continuous arbitrary functions for any accuracy[5].

From the above mentioned, it can be seen that the B—P Model can satisfy the knowledge structure shown in Fig. 1 in general. However necessary modifications are required.

3. 2 Modification of B—P model[7][8][9]

3. 2. 1 Modification of the network structure

a. In the B—P Model as shown in Fig. 2, the unidirectional perfect connection is done between adjacent layers, but some are not neccessary at all and can be deleted completely according to the actural conditions in its application in the economic evaluation.

b. There are many types of input values for the initial samples. If all the values are included into one neural network it would increase the complexity and also reduce the learning speed of the neural network and it would lead to difficult conclusion of the evalutions. Therefore, the neural network should be structured properly, the training, conducted separately, and the outcome information,

plications.

c. The number of hidden nodes can be adjusted for the above mentioned various neural network in case of need and it is not necessary to set up hidden node layers for linear problems[8].

As mentioned above, the theorem can ensure that the three layer B—P Model can simulate the arbitrary continuous functions but as a matter of fact, it is rather difficult to accurately conduct the computation simulation due to the built—in shortcomings. Hence, in this system, the B—P Model is not intended to represent the various procedural knowledge but instead, it is used to represent the reasoning expert experience knowledge and in particular the evaluation type expert experience knowledge. This is more practical and realistic for the increasing of the operational efficiency of the system.

3. 2. 2 Improvements of the algorithm of the B—P Model

a. In the knowledge network for economic evaluation, there are not only data input nodes but also status input nodes. For the latter case, the status has to be quantified first, i. e. to represent different status by corresponding quantities.

b. It can be seen that the sensitivity area of changes for activation function and its derivative is rather small and is only in [—4,4] as shown in Fig. 4. Therefore, the sample value should be located in this area as far as possible so as to better adjust the weight valaue (for sample of faster changes, this area can be reduced).

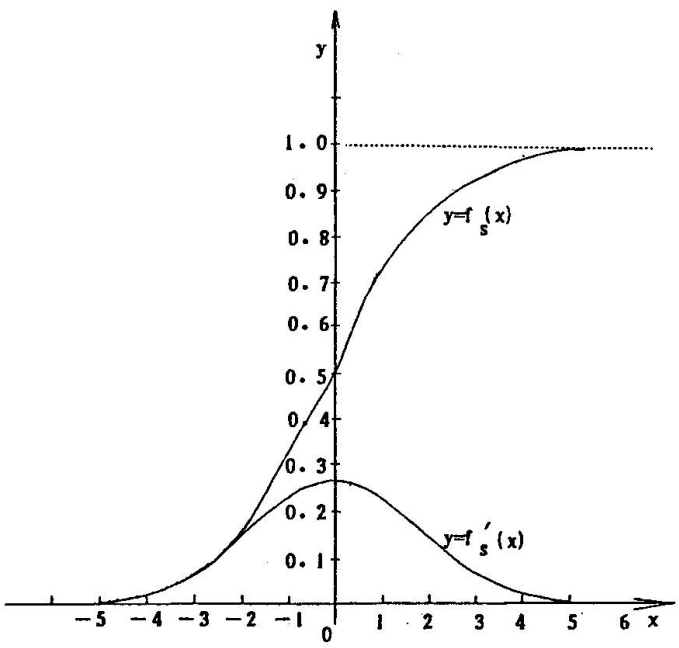

Fig. 4

Assuming that there are L given samples, X_i^R, i=1,2..., L, R=1,2..., the following conversion for X should be conducted:

$$Y_i^R = \frac{8(X_i^R - b)}{a-b} - 4 \quad \text{Where } a = \max\{x_i^R\},\ b = \min\{x_i^R\}$$

By this way the input value of the sample is compressed to the area of $[-4, 4]$.

For the output value of the network, a threshold of $0<\theta<1$ should be selected so as to keep the output value being 1 when $f_s(X) \geqslant \theta$ or zero.

In view of the above mentioned statement, the algorithnm of the improved B—P Model is shown in Fig. 5.

4. COMBINATION OF NEURAL NETWORK WITH EXPERT SYSTEM[11], [12], [13]

Since the neural network possesses strong knowledge acquisition capabilities and system simulation functions, there have developed quite several expert systems structured by neural network. However, it is the author's view that these systems are mere traditional expert system represented in the form of neural network hence bringing forth some certain problems in actual applications.

a. The interpretation function of the system is rather weak and it is suitable only for certain training samples and lacks representativity in many cases.

b. Due to the inadequecy of the training samples the system sometimes can not solve the desired problems or it will generate more than one conclusions.

c. It might cause the complete abortion of the existing expert system and, in particlular, the valuable knowledge base.

The above mentioned three problems, especially the first two, have been solved satisfactorily by using the traditional expert system. But on the other hand, it is difficult for the traditional expert system to realize the automatic acquisition of knowledge and parallel processing. However, these shortcomings can be well coped with by the neural network. A proper artificial intellegent system should be a traditional expert system to be combined with the neural network. This newly—formed artificial intellegent system should be composed of and structured as shown in Fig. 6.

The traditional expert system is explained in [12].

In the neural network system, the Neural Network Knowledge Base (NNKB) is actually a set of improved B—P neural network Models, which is constantly updating with the running of the system. The neural network is trained in the training module by using the samples and the improved B—P algorithm. The solver is used to get the conclusions through the use of knowledge base and the inputs as well as the working method of the B—P Model. The verification module is used to verify the reasonability of the conclusions.

This new type of intellegent system is design to operat in such a way that each issue must go first to the neural network for solutions. The outputs might be in one of the following three patterns:

1. Only one output from the output node is greater than the limit value. In this case, the system will interprete and output the conclusion.

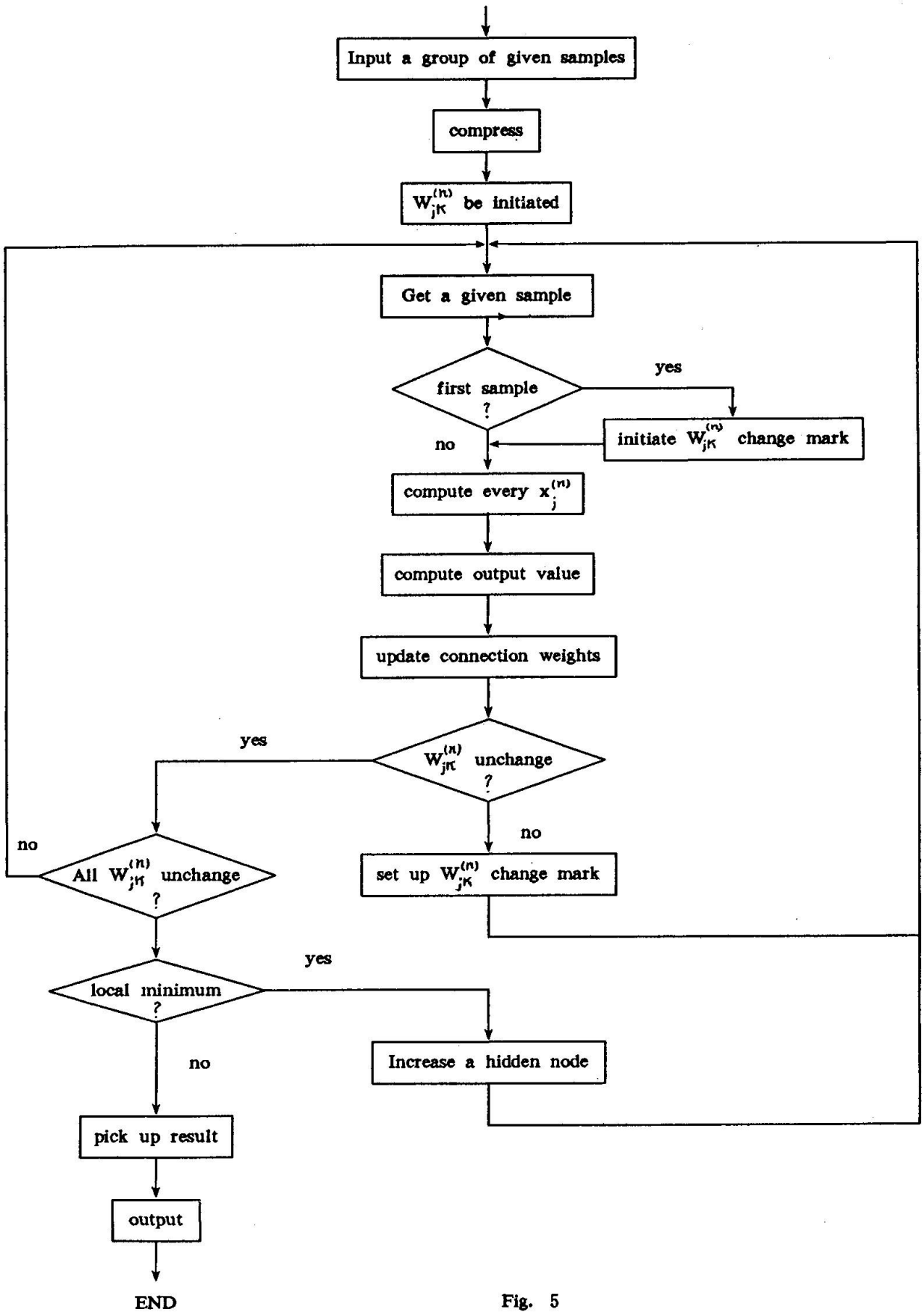
Input a group of given samples
compress
$W_{jK}^{(n)}$ be initiated
Get a given sample
first sample ?
yes
initiate $W_{jK}^{(n)}$ change mark
no
compute every $x_j^{(n)}$
compute output value
update connection weights
$W_{jK}^{(n)}$ unchange ?
yes
no
set up $W_{jK}^{(n)}$ change mark
All $W_{jK}^{(n)}$ unchange ?
no
local minimum ?
yes
Increase a hidden node
no
pick up result
output
END

Fig. 5

2. Several outputs from the output node are greater than the limit value. In this case, all the outputs can be treated as candidates for conclusions and then the inference method is used for deriving the final conclusion.

3. No output from the output mode is greater than the limit value, In this case, only the traditional expert system is to be used.

For the second and the third cases, the outputs and conclusions obtained should be used as new samples to be inputed to the system after they are verified so as to train the neural network. This will lead to further enhancement of the functional capabilities of the neural network.

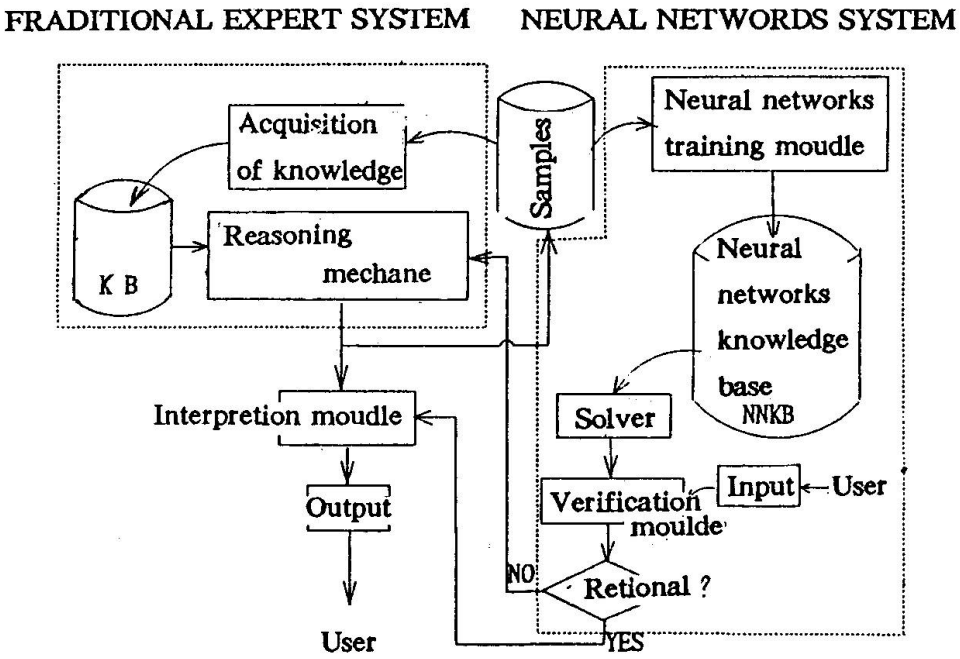

Fig. 6

The appolication of the neural network in engineering evaluation is just beginning. It has offered a new means to solve certain pending problems in our economic evaluation of railway construction projects.

REFERENCES

1. W. R. WIAN, Expert System for Roads. Monash University Press, 1988.

2. YIN HONGFENG, DAIRUWEI, Theory of Artificial Neural Networks Information Procoess. Pattern Recognition and Artificial Intelligence Vol. 3, No. 1, 1990.

3. ZHANG HONG BIN, Learning Algorithm of Artificial Neural Networks. Computer Science, No. 2 1990.

4. TANG YIQUN, Neural Networks and Neural Neworks Computer. Computer Magazine, Vol. 17,

No. 6, 1989.

5. B. IRIE, and S. MIYAKE, Capabilities of Three Layered perceptrons. Proc. of IEEE ICNN88, 1988.

6. S. S. RANGWALLA and D. A. DORNFELD, Learning and Optimization of Machining Operations Using Comtuting Abilities of Nearal Networks. IEEE Transctions on Systems, Man, and Cybernetics Vol. 19, No. 2, 1989.

7. YAO XIN, CHENGGOULIANG, Neural Networks Computer. Computer Engineering No. 8, 1990.

8. TANG YIQUN, Neural Networks and Neural Networks Computer. Computer Magazine Vol. 18, No. 1, 1990.

9. CHEN BAOLIN, The Theory and Algorithm of Optimization, QingHua University Press, 1989.

10. W. MYERS, The Combination in Expert System with Neural Networks Computer Science No. 5, 1991.

11. HONG JIARONG, Thinking Simulate Computer Science No. 4, 1991.

12. WANG IIANGZI XUYANG, Expert System for Economic Evaluation of Rail Way Construction Project. North Jiaotong University, 1990.