Zeitschrift: IABSE reports = Rapports AIPC = IVBH Berichte
Band: 64 (1991)

Artikel: Prestressed concrete bridge made of precast elements
Autor: Likverman, A.I.
DOI: https://doi.org/10.5169/seals-49324

Nutzungsbedingungen
Die ETH-Bibliothek ist die Anbieterin der digitalisierten Zeitschriften auf E-Periodica. Sie besitzt keine Urheberrechte an den Zeitschriften und ist nicht verantwortlich für deren Inhalte. Die Rechte liegen in der Regel bei den Herausgebern beziehungsweise den externen Rechteinhabern. Das Veröffentlichen von Bildern in Print- und Online-Publikationen sowie auf Social Media-Kanälen oder Webseiten ist nur mit vorheriger Genehmigung der Rechteinhaber erlaubt. Mehr erfahren

Conditions d'utilisation
L'ETH Library est le fournisseur des revues numérisées. Elle ne détient aucun droit d'auteur sur les revues et n'est pas responsable de leur contenu. En règle générale, les droits sont détenus par les éditeurs ou les détenteurs de droits externes. La reproduction d'images dans des publications imprimées ou en ligne ainsi que sur des canaux de médias sociaux ou des sites web n'est autorisée qu'avec l'accord préalable des détenteurs des droits. En savoir plus

Terms of use
The ETH Library is the provider of the digitised journals. It does not own any copyrights to the journals and is not responsible for their content. The rights usually lie with the publishers or the external rights holders. Publishing images in print and online publications, as well as on social media channels or websites, is only permitted with the prior consent of the rights holders. Find out more

Download PDF: 19.02.2026

ETH-Bibliothek Zürich, E-Periodica, https://www.e-periodica.ch

Prestressed Concrete Bridge made of Precast Elements

Pont en béton armé préfabriqué et coulé en place

Monolithische Stahlbetonbrücke aus Fertigteilen

A.I. LIKVERMAN
Civil Engineer
Giprotransmost
Moscow, USSR

The bridge across SAMARA river near settlement Alekseevka may serve as an example of the construction technology influence on the design of reinforced concrete bridges.
The bridge is located on motor road of 2 technical category, has the roadway width of 11.5 m with side-walks of 1 m each, the bridge diagram: 51.6+3*79.5+72.1+58.5+40.9 m (Fig.1).

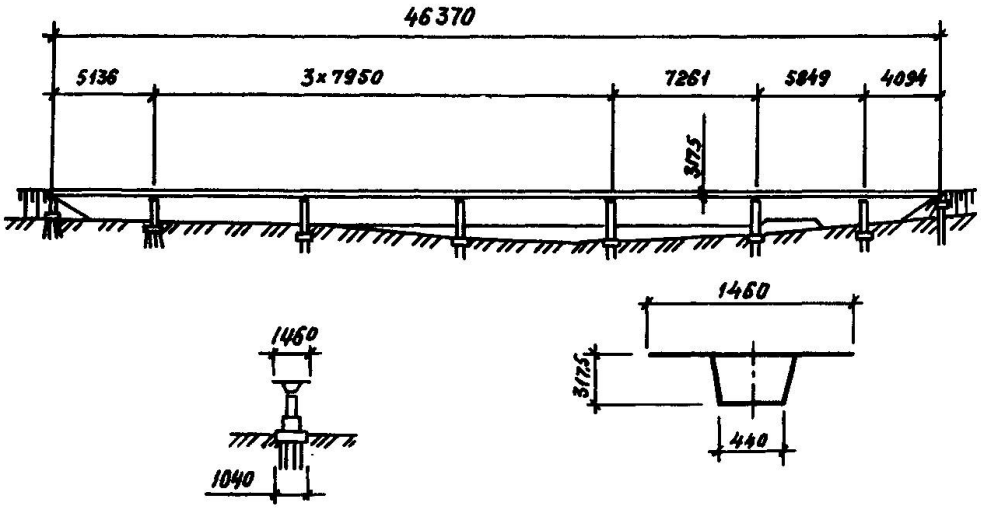

Fig.1 Diagram of superstructure

The superstructure is continuous,prestressed from precast reinforced concrete block of box cross section having epoxy adhesive interblock joints.
The block were manufactured at a plant located at a considerable distance where the block for other bridges of similar designe were produced. The overall dimensions and mass of block were assigned taking into account their manufacture at the plant and transportation by rail and motor roads.
The superstructure is assumed from blocks of constant height of 3.16 m (1/25 of span).
Length of the top plate is 13.6 m with a minimum thickness of 20 cm.,block width beneath - 4.4 m at cantilever size of 5.6 m. The block face size is 2.78 m.
Thickness of box inclined walls is constant -28 cm, thickness of the bottom plate is variable - from 70 cm in span and up to 32 cm at bearing.
Material of the superstructure reinforced concrete of 500-600 brand.
Prestressed reinforcement - tendons of high strength wire having the time resistance of 170 kgf/mm^2.
The bearing parts - combined, of sleeve-type using rubber and fluoroplastic.

The bridge superstructure blocks are erected by a method of balanced suspension assembly using: in the river side crane installations CKY and floating crane, in the shore spans and over the railway tracks - crawler crane.
The pier foundations are erected on the cast-in-site reinforced concrete pillars of 1.25 - 1.6 m diameter, thrusted on against destroyed dolomites and clays.
Body of intermediate piers - massive within the ice movement limits and hollow of box form - above the ice movement level, cast-in site, erected in travelling metal forms.
On the superstructures the following expenditure of materials per m^2 was obtained: of concrete - 0.5 m^3, metal - 116 kg, including high strength - 38.0 kg.
The abopted parameters of prefabricated blocks were used for development of universal technology of manufacture of similar design superstructures.