Zeitschrift: IABSE reports = Rapports AIPC = IVBH Berichte

Band: 62 (1991)

Rubrik: Cracking

Nutzungsbedingungen

Die ETH-Bibliothek ist die Anbieterin der digitalisierten Zeitschriften auf E-Periodica. Sie besitzt keine Urheberrechte an den Zeitschriften und ist nicht verantwortlich für deren Inhalte. Die Rechte liegen in der Regel bei den Herausgebern beziehungsweise den externen Rechteinhabern. Das Veröffentlichen von Bildern in Print- und Online-Publikationen sowie auf Social Media-Kanälen oder Webseiten ist nur mit vorheriger Genehmigung der Rechteinhaber erlaubt. Mehr erfahren

Conditions d'utilisation

L'ETH Library est le fournisseur des revues numérisées. Elle ne détient aucun droit d'auteur sur les revues et n'est pas responsable de leur contenu. En règle générale, les droits sont détenus par les éditeurs ou les détenteurs de droits externes. La reproduction d'images dans des publications imprimées ou en ligne ainsi que sur des canaux de médias sociaux ou des sites web n'est autorisée qu'avec l'accord préalable des détenteurs des droits. En savoir plus

Terms of use

The ETH Library is the provider of the digitised journals. It does not own any copyrights to the journals and is not responsible for their content. The rights usually lie with the publishers or the external rights holders. Publishing images in print and online publications, as well as on social media channels or websites, is only permitted with the prior consent of the rights holders. Find out more

Download PDF: 01.04.2026

ETH-Bibliothek Zürich, E-Periodica, https://www.e-periodica.ch

Imposed Deformation and Cracking

Fissuration par déformation imposée

Rissbildung durch Zwang

H.W. REINHARDT
Prof. Dr.
Otto Graf Institute
Stuttgart, Germany

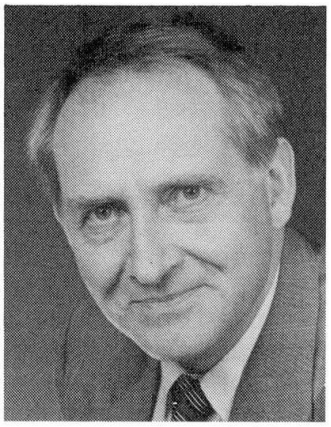

H.W. Reinhardt, born 1939, obtained his civil engineering degree at Stuttgart University. He performed research on concrete and concrete structures at Delft and Darmstadt. Since April 1990, he has been Professor for materials at Stuttgart University and the managing director of the Otto Graf Institute.

SUMMARY

Attention is focused on imposed deformation which may lead to cracking of concrete. Some typical situations are: stresses due to nonlinear temperature and shrinkage distribution, imposed deformation, and deformation with internal and external restraint. Some practical cases illustrate the relevance of these effects.

RÉSUMÉ

L'auteur traite les déformations imposées pouvant causer la fissuration du béton. On distingue des situations typiques: contraintes par distribution non-linéaire de la température et par retrait, déformation imposée, et déformation avec empêchement intérieur. Quelques cas pratiques illustrent l'importance de ces actions.

ZUSAMMENFASSUNG

Zentrischer Zwang mit möglicher Rissbildung wird behandelt. Dabei werden typische Fälle unterschieden: Spannungen infolge nichtlinearer Verteilung von Temperatur und Schwinden, aufgezwungene Verschiebung, innerer und äusserer Zwang. Praktische Beispiele verdeutlichen die Bedeutung dieser Belastungen.

1. MOTIVE AND SCOPE

There is an increasing number of structures with great demands on serviceability, especially on gas-tightness and liquid-tightness. We can think about structures for environmental protection such as catch basins, waste disposal sites, interim storage sites, treatment plants for contaminated water, about structures in chemical plants of refineries, but also about basements, pipes and ducts located in contaminated ground water. The common feature of these concrete structures is that they serve at least two purposes. First, they are structures which carry dead and life load, and second, they ought to be impermeable against gasses and fluids during a certain time. A main concern is cracking, i.e. occurence of cracks and crack width.

Besides direct actions which are usually taken into account in designing there are indirect actions originating in imposed and restraint deformations. Causes can be due to shrinkage and swelling of concrete, thermal movements, chemical reactions, and differential settlement. This contribution deals with eigenstresses and actions due to imposed and restraint deformation. It will be shown that the boundary conditions have an essential influence on these actions. Practical examples will illustrate the findings.

2. TYPE OF ACTIONS

2.1 Non-linear temperature distribution

Heating and cooling of concrete elements due to air temperature variation and thermal radiation cause non-linear temperature distribution.

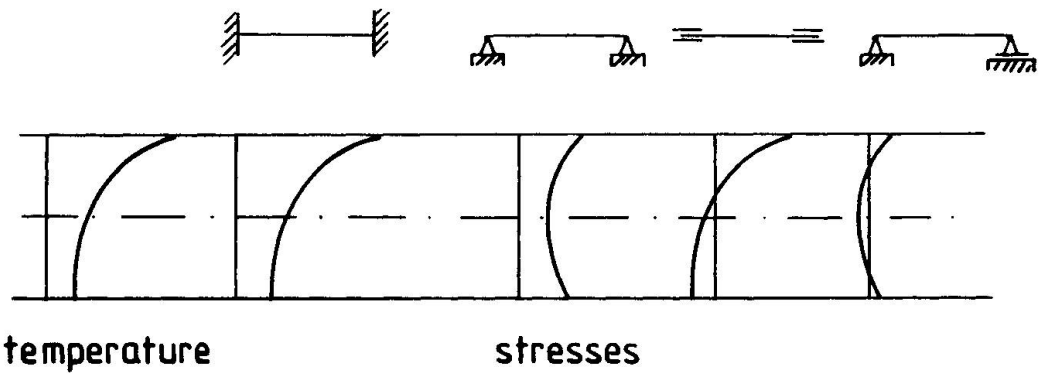

Fig. 1 Stresses due to non-linear temperature distribution with various boundary conditions.

Fig. 1 shows a typical example of a concrete slab on a foundation during nightly cooling. The surface temperature is lowest. Depending upon the boundary conditions the stress distribution is different. Even if the supports allow rotation and translation there are eigenstresses in the homogeneous cross-section, in this case tensile stresses at the surface.

In a composite cross-section with layers of material with different coefficients of thermal expansion there will be eigenstresses even if the temperature is raised uniformly. At the boundaries of the layers shear stresses develop.

Similarly to non-linear temperature distribution, drying and wetting of concrete cause eigenstresses due to shrinkage. However, the process is much slower. The governing parameter for temperature is the thermal diffusivity which is about $1*10^{-6} m^2 s^{-1}$, and, for shrinkage, it is the diffusion coefficient which is about $2*10^{-10} m^2 s^{-1}$. This means that shrinkage is about 5000 times slower than temperature movement.

2.2 Imposed deformation

If various concrete elements which are connected to each other undergo different thermal and shrinkage history there may mutually impose deformation. For instance, if an external column is heated up while the internal columns stay at the same temperature a deformation will be imposed on the slab resting on these columns. Those deformations are most relevant which cause tensile forces in an element or excentricity in a compressive part.

Common imposed deformations are due to differential settlement of hyperstatic structures.

The reaction of a structural member to an imposed deformation δ can be illustrated by Fig. 2. If a displacement δ_0 is imposed the member will crack

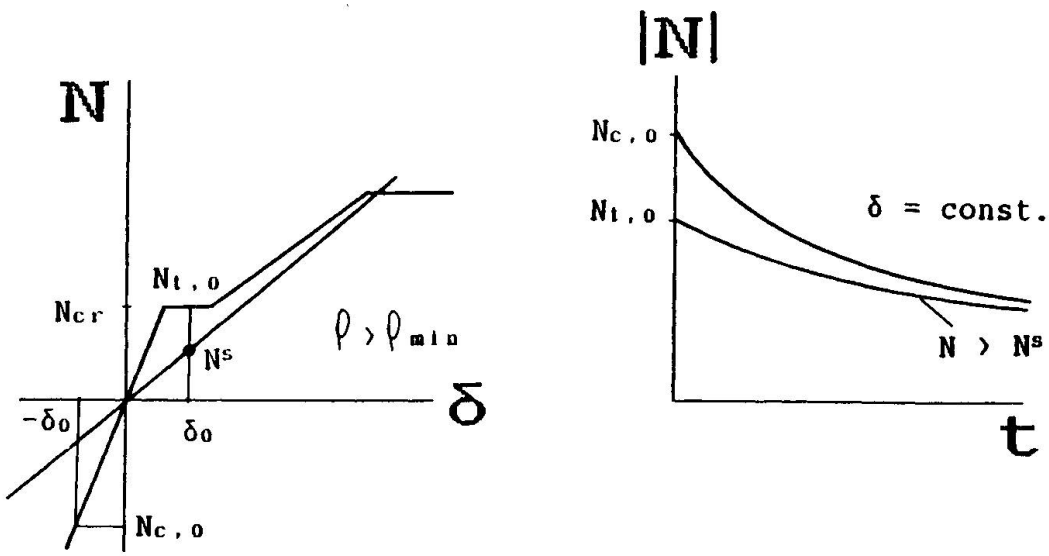

Fig. 2 a) Normal force vs. imposed deformation
b) Normal force vs. time with constant deformation

at N_{cr} (tension) or will react with $N_{c,o}$ (compression). The forces will decrease due to relaxation of the concrete. In case of tension the force cannot become lower than N^s. If the reinforcement ratio is smaller than $\delta_{min} = f_t/f_{sy}$ the steel will yield after cracking remaining at a constant force $N_y = A_s f_{sy}$. This is shown by Fig. 3

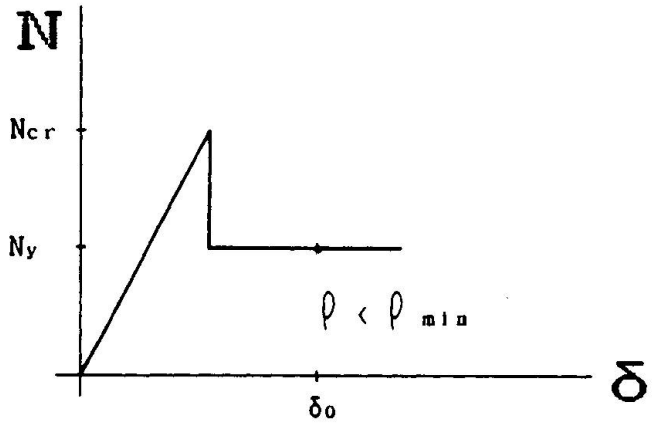

Fig. 3 Normal force vs. imposed deformation for $\delta < \delta min$.

To judge the effect of imposed deformations realistically the correct stiffness of the member has to be chosen. An analysis with initial elastic stiffness may lead to a great overestimation of reaction forces. Crack width and crack spacing can be obtained in the same way as for imposed loads [1].

2.3 Restraint deformation

If deformation is caused by temperature, humidity, chemical reactions, i.e effects which cause length changes of the concrete, and if this deformation cannot occur freely stresses will develop in the cross-section. There are two different cases: the movement will be restraint externally by supports or internally by reinforcement. The two cases lead to quite different stresses and crack widths. This will be elaborated in more detail in the following chapter.

3. UNIFORM SHRINKAGE IN A REINFORCED MEMBER

3.1 Internal restraint

It is assumed that the concrete shrinks and that this movement is restraint by embedded bars. Since the concrete member is simply supported there will be no external forces. Steel strain and concrete strains are equal, $\epsilon_s = \epsilon_c$. The forces are equal with opposite sign, $N_c = -N_s$. The concrete strain consists of the initial shrinkage strain ϵ_0 and the elastic strain due to composite action:

$$\epsilon_c = \frac{N_c}{A_c E_c} + \epsilon_0 \qquad (1)$$

The steel strain is given by

$$\epsilon_s = \frac{N_s}{E_s\ A_s} \tag{2}$$

With $\rho = A_s/A_c$, $n = E_s/E_c$, $\epsilon_s = \epsilon_c$ it yields

$$\epsilon_s = \frac{E_c\ A_c}{E_sA_s + E_cA_c} = \frac{1}{1 + n\,\rho}\ \epsilon_0 \tag{3}$$

The elastic stresses are

$$\sigma_s = \frac{E_s\ \epsilon_0}{1 + n\rho} \quad \text{and} \quad \sigma_c = -\ \rho\ \sigma_s \tag{4}$$

As soon as the tensile strength of concrete is reached cracks will develop. This is true for $\sigma_c = f_{ct}$ and the appropriate strain ϵ_0^{CR} becomes

$$\epsilon_0^{CR} = \frac{1 + n\rho}{\rho}\ \frac{f_{ct}}{E_s} = \frac{1 + n\rho}{n\rho}\ \frac{f_{ct}}{E_c} \tag{5}$$

In the vicinity of a crack, bond stresses between steel and concrete are activated. Assuming a constant bond stress τ_0 (for a more accurate treatment see [1]) the stress is linearly distributed between two cracks with the maximum $\sigma_{c,max} = f_{ct}$. The elastic steel deformation is then

$$\Delta l_s = \frac{1}{2}\ \frac{1 + n\rho}{\rho}\ \frac{f_{ct}}{E_s}\ l_{CR} \tag{6}$$

and the mean steel strain

$$\bar{\epsilon}_s = \frac{\Delta l_s}{l_{CR}} = \frac{1}{2}\ \frac{1 + n\rho}{\rho}\ \frac{f_{ct}}{E_s} \tag{7}$$

with l_{CR} = crack spacing.

The mean strain of concrete is at this moment

$$\bar{\epsilon}_c = \frac{1 + n\rho}{\rho} \frac{f_{ct}}{E_s} - \frac{1}{2} \frac{1 + n\rho}{\rho} \frac{f_{ct}}{E_s}$$

$$= \frac{1}{2} \frac{1 + n\rho}{\rho} \frac{f_{ct}}{E_s} \qquad (8)$$

Mean steel and concrete strain are the same, the crack width is zero.

With increasing ϵ_0, concrete will slip on the steel since τ_0 = const. Concrete strain increases according to

$$\epsilon_c = \epsilon_0 - \frac{1}{2} \frac{1 + n\rho}{\rho} \frac{f_{ct}}{E_s} \qquad (9)$$

while steel strain remains the same. The mean crack width becomes

$$\bar{w} = l_{CR} (\bar{\epsilon}_c - \bar{\epsilon}_s) = l_{CR} \left(\epsilon_0 - \frac{1 + n\rho}{\rho} \frac{f_{ct}}{E_s} \right) \qquad (10)$$

Crack spacing is given by

$$l_{CR} = \frac{1}{2} \frac{f_{ct}}{\tau_0} \frac{d_s}{\rho} \qquad (11)$$

with d_s = bar diameter. Three stages can be distinguished if concrete shrinkage increases continuously (see Fig. 4). These are:

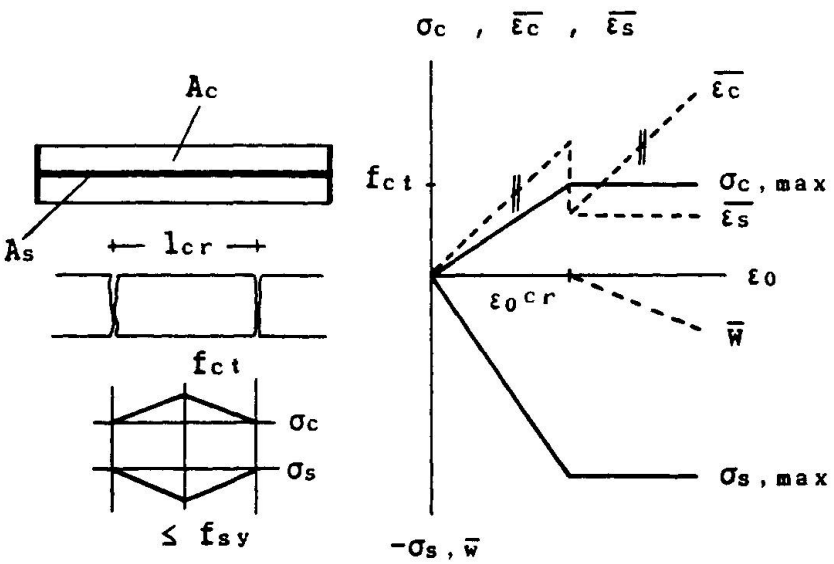

Fig. 4 Stress, strain, and crack width vs. initial strain ϵ_0

1) No cracks, shortening of the composite member.
2) At cracking, the member length increases again; crack width is zero.
3) The length of the bar remains constant and the crack width increases.

It should be noted that $\rho \geq f_{ct}/f_{sy}$ because otherwise the steel would yield.

3.2 External (and internal) restraint

If the composite member is fixed at the ends and shrinkage occurs then

$$\sigma_c = -\epsilon_0 E_c \quad \text{and} \quad \sigma_s = 0 \tag{12}$$

Cracks develop at $\sigma_c = f_{ct}$. Then, concrete gets shorter and forces the steel to become shorter. Since the ends are fixed a tensile force will develop in the steel. Steel stress and strain are

$$\sigma_{s,max} = -\frac{1 + n\rho}{\rho} f_{ct} \quad \text{and} \quad \bar{\epsilon}_s = -\frac{1}{2}\frac{1 + n\rho}{\rho}\frac{f_{ct}}{E_s} \tag{13}$$

The elastic elongation $\bar{\epsilon}_s = \dfrac{\sigma_s^{CR}}{E_s}$ has to cancel the shortening which makes

$$\sigma_s^{CR} = \frac{1}{2}\frac{1 + n\rho}{\rho} f_{ct} \tag{14}$$

which is half as much as in the simply supported case. However, the sign of the stress changes along the bar. The crack width can be calculated from the initial strain minus elastic elongation of concrete:

$$\bar{w} = l_{CR}\left(\epsilon_0 - \frac{1 + n\rho}{2}\frac{f_{ct}}{E_c}\right) \tag{15}$$

Comparing eqs. (10) and (15) tells that crack width is larger in case of external restraint than it is at internal restraint. Crack spacing is the same. The minimum reinforcement ratio at external restraint is half of the one at internal restraint. The schematics of this situation are given by Fig. 5.

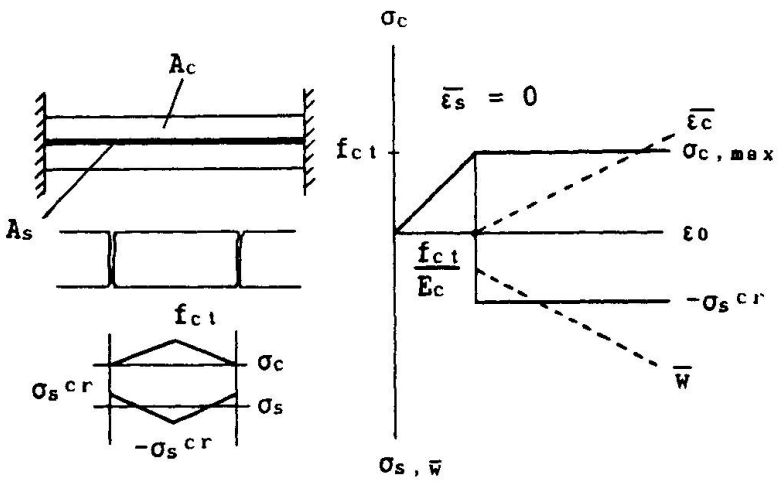

Fig. 5 Stress, strain and crack width vs. initial strain ϵ_0

3.3 General remark

The derivations made in the two preceeding chapters are intentionally based on crude material modelling in order to make the main point clear, the importance of the boundary condition. The results can be improved by assuming time dependent properties of concrete [2], realistic bond behaviour, and scatter of material properties.

4. PRACTICAL CASES

4.1 Car-park

The roof of an underground parking facility consists of a reinforced concrete slab supported by beams. On the roof, there is a water drainage but no isolation. Fig. 6 shows the situation after a year of service. Cracks have

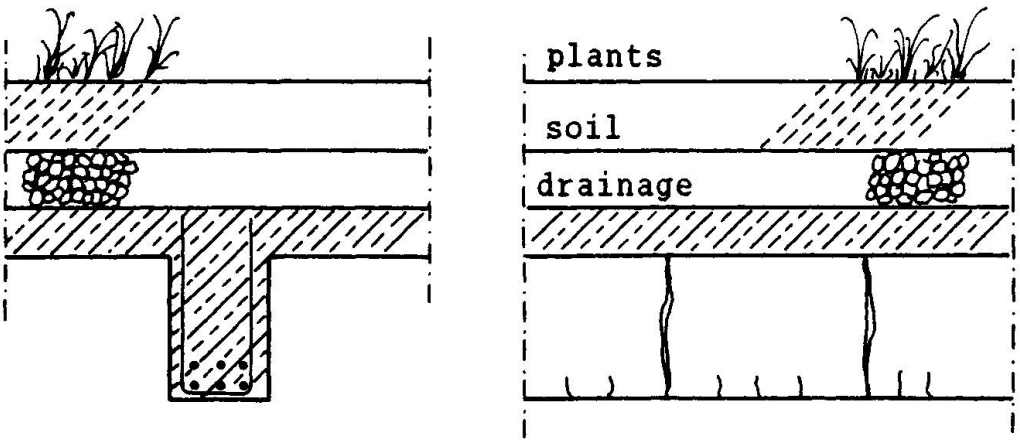

Fig. 6 Cracks in the beam under the roof slab

developed in the beam due to differential shrinkage. The slab does not shrink, it may even swell whereas the beam does shrink due to heating and ventilation of the parking deck. The crack width is the largest at places with no longitudinal reinforcement (w = 0.3 to 0.5 mm) and smallest near the longitudinal bars (w = 0.1 to 0.2 mm).

4.2 Baking furnace

Anodes for the electrolytic production of aluminium are manufactured in a baking furnace at about 1050°C. Although the interior of the furnace is strongly insulated the concrete structure is warmed up to about 200°C at the inner face. Temperature distribution gives rise to curvature of the walls (see Fig. 7). The horizontal displacement was large enough to touch the columns of the superstructure. The walls cracked and the columns were loaded by an almost constant force, i.e. imposed deformation on the walls and imposed force on the columns.

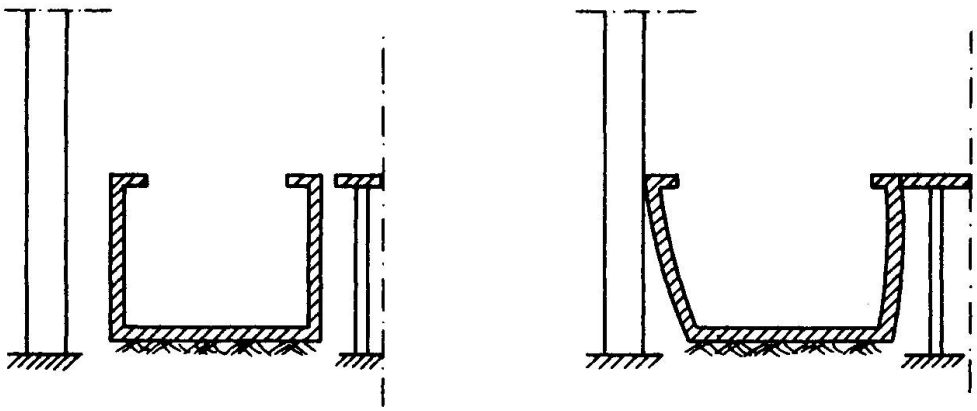

Fig. 7 Baking furnace with superstructure

4.3 Sedimentation-basin

The sedimentation basin of a process-water treatment plant cracked due to temperature differences between the hot water (38°C) and the cold air and structure. Fig. 8 shows the basin with vertical cracks at the

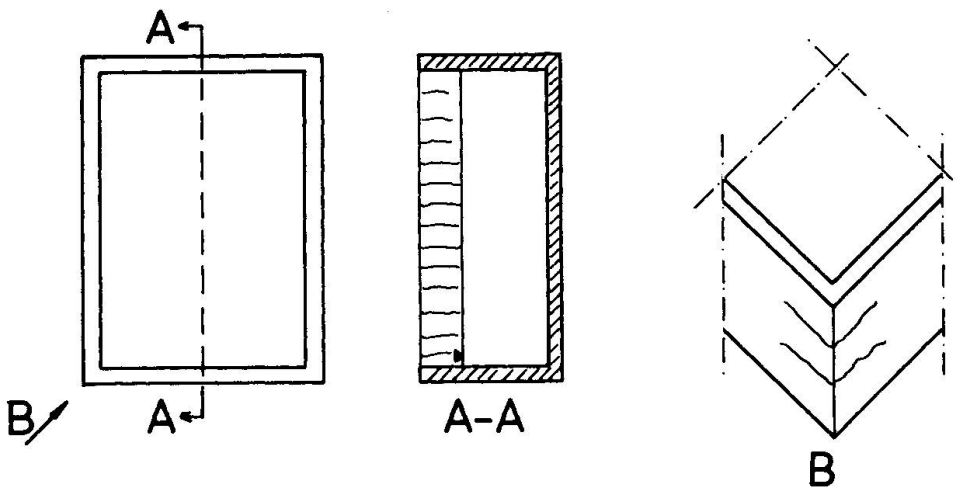

Fig. 8 Sedimentation-basin with cracks indicated

crown of the walls and horizontal cracks at the edges. The basin has been designed and constructed very carefully without any cracks due to early thermal movement. However, during operation cracks appeared the cause of which are rather obvious. There are thermal stresses in wall direction because the lower part of the structure warms up while the top part does not. In the middle of the basin the wall can bend and rotate freely whereas the edges restrain the curvature. Here the inner edge expands due to heating and the outer edge is stressed in such a way that cracks occur. It will be interesting to observe the cracks and to see whether they propagate into the concrete due to inelastic cyclic loading [3].

5. CONCLUSION AND OUTLOOK

Imposed deformations are usually treated as secondary effects which may be neglected in design of concrete structures. However, these effects should receive due attention in all cases where tightness against gasses and fluids play an important role.

It has been shown how cracks develop and that crack width is greatly influenced by boundary conditions. Models should be developed which enable the structural engineer to judge the behaviour of a structure under restraint deformations, similarly to what has been developed for imposed loads.

6. REFERENCES

[1] BRUGGELING, A.S.G.; Theorie en praktÿk van het gewapend beton. Uitgave PBF, 's-Hertogenbosch 1985.

[2] TROST, H.; Creep relaxation and shrinkage of structural concrete. Introductory Report to this colloquium.

[3] HORDIJK, D.A.; REINHARDT, H.W.; Growth of discrete cracks in concrete under fatigue loading. "Toughening Mechanisms in Quasi-Brittle Materials", ed. S.P.Shah, Evanston 1990, pp 553-568.

Control of Crack Width in Deep Reinforced Concrete Beams

Contrôle de la fissuration des grandes poutres en béton armé

Beschränkung der Rissbreiten in hohen Stahlbetonträgern

Cornelis R. BRAAM
Dr. Eng.
Molenbroek Civil Eng. Inc.
Rotterdam, The Netherlands

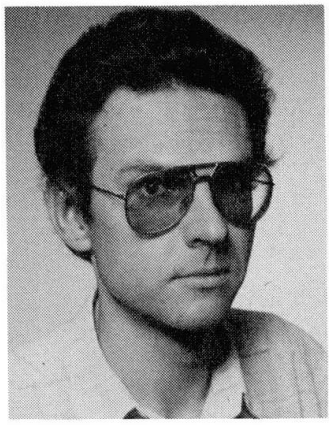

Cornelis R. Braam, born 1961, is senior-consultant at Molenbroek Civil Engineers Inc. in Rotterdam. He graduated as Civil Engineer M.Sc. at the Delft University of Technology. He joined the concrete structures group in 1985 receiving his Ph.D. degree in 1990.

Joost C. WALRAVEN
Professor
Delft Univ of Techn.
Delft, The Netherlands

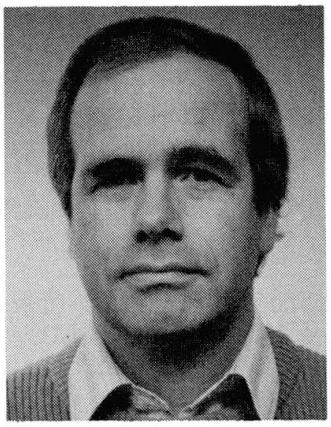

Joost Walraven, born in 1947, obtained his Ph.D. degree in Delft in 1980. Associate professor at the University of Darmstadt until 1989, and since then professor of Structural Engineering at the Delft University of Technology.

SUMMARY

Most calculation methods for the control of crack widths in concrete structures are based on the behaviour of centrically reinforced concrete bars, subjected to tension. In deep beams, the validity of these methods is therefore mainly limited to the regions directly surrounding the main reinforcing bars. In the areas at some distance from the main reinforcement, however, crack control has to be carried out with the same attention. In this paper it is described how crack control in deep beams can be carried out on the basis of a rational model.

RÉSUMÉ

Plusieurs méthodes de calcul concernant le contrôle de la largeur des fissures sont basées sur le comportement de tirants armés axialement et tendus. Pour les murs porteurs, la validité de cette théorie est cependant limitée aux zones situées directement au voisinage des barres d'armature principale. On, pour les régions se trouvant à une certaine distance, le contrôle de la fissuration doit malgré tout être considéré avec le même soin. Ce problème est résolu de façon cohérente par un modèle rationnel adapté.

ZUSAMMENFASSUNG

Die meisten Rechenmodelle zur Beschränkung der Rissbreiten basieren auf dem Verhalten von zentrisch bewehrten Stahlbetonstäben, die auf Zug beansprucht werden. In grösseren Bauteilen ist die Gültigkeit dieser Rechenmodelle deshalb auf die Umgebung der Hauptbewehrung beschränkt. In den von der Hauptbewehrung weiter entfernten Bereichen ist eine ausreichende Untersuchung zur Vermeidung von klaffenden Rissen jedoch genau so wichtig. In diesem Aufsatz wird beschrieben wie man, aufgrund einer rationalen Modellierung, die Rissbreiten in hohen Stahlbetonträgern beschränken kann.

1. INTRODUCTION

The cracking behaviour of reinforced concrete structures has been investigated for many years. Most research was restricted to describing crack width and crack spacing in a semi-empirical manner. In recent years considerable progress has been gained with regard to the development of rational models for crack width control: Crack widths and spacings can be calculated as a function of the concrete tensile strength, bond strength, reinforcing ratio, bar size and load level. However, since laboratory experiments provide the basis for the tuning between theory and practice, most results are restricted to relatively small concrete specimens. With regard to members loaded in bending, the experiments have shown that crack widths are controlled in an effective area around the main reinforcement. However, outside this region the cracks 'collect' if too little web reinforcement is applied. Leonhardt [1] already pointed out this phenomenon in the early sixties and defined the wide cracks in the web as 'Sammelrisse'.
Since members in practice are generally considerably larger than test-beams in laboraties, this is a problem of particular importance. It is necessary to know the amount of horizontal web reinforcement that is required to control the cracking outside the 'effective area' of the main reinforcement.

2. CRACKING BEHAVIOUR OF TENSILE MEMBERS AND BEAMS

2.1 Tensile members

The first relations to predict the crack spacing and the crack width in tensile members were based on a relatively simple calculation model [2]. The basic principles of the model can be summarized as follows: At the instant of cracking, the concrete tensile force must be carried by the reinforcing steel. At a certain distance away from a crack, the so-called transfer length l_t [2], the bond stress is zero. The whole concrete section is assumed to be in uniform tension so that a new crack can occur. At increasing elongation new cracks are formed until the crack pattern is 'fully developed', e.g. all the crack spacings vary between l_t and $2l_t$. In this situation there are no parts where the concrete stress reaches the tensile strength. Thus, the mean crack spacing l_m in a fully developed crack pattern is $1.5l_t$ [2]. After the introduction of a lower-bound value, the following formula is obtained:

$$l_m = k_1 + k_2 k_3 \frac{d_s}{\rho} \qquad [mm] \qquad (1)$$

The mean crack width follows from the mean tensile strain ϵ_{sm}:

$$\epsilon_{sm} = \epsilon_s [1 - k_5 k_6 (\frac{\sigma_{s,cr}}{\sigma_s})^2] \qquad [-] \qquad (2)$$

where $\sigma_{s,cr}$ and σ_s are the steel stresses in a crack at the cracking load and the service load, respectively. The variation in crack widths is accounted for by the coefficient k_4:

$$w_k = k_4 w_m \qquad [mm] \qquad (3)$$

The coefficients k_1 to k_6 can be tuned so as to obtain close agreement with experimental results.

2.2 Beams

Formulae (1) to (3) can also be used to predict the crack pattern at the level of the main reinforcement of beams. In the formula (1) the mean crack

spacing was found to depend on, among other factors, the reinforcing ratio ρ. In the case of a tensile member this ratio is given by $\rho=A_s/A_c$. For beams an 'effective' concrete area around the main reinforcement is defined. In most recent approaches, this area is based on the beam height h and the effective beam depth d [3,4]:

$$\rho_{eff} = \frac{A_s}{\alpha b(h-d)} \qquad [-] \qquad (4)$$

It is observed that the cracks initiated by the main reinforcement 'collect' outside the 'effective concrete area'. Thus, in the web of beams fewer cracks with larger widths occur, see figure 1 [5]. Several researchers have investigated the development of crack widths and spacings over the entire height of deep beams, e.g. [6,7]. However, the amount of experimental data is rather limited. Therefore, it was decided to perform experiments on deep reinforced concrete beams.

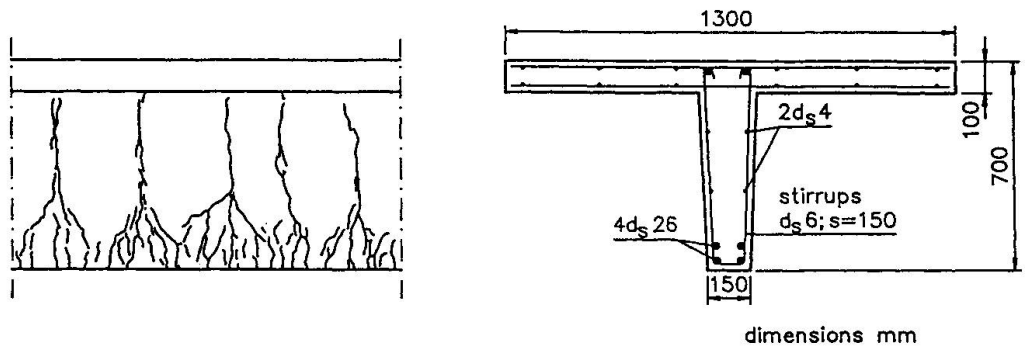

Fig. 1 Crack pattern and cross-section of a deep T-beam [5].

3. EXPERIMENTS

3.1 Test set-up

In the tests 15 beams were loaded in four-point bending, see figure 2. The beams were 5.5m long and 0.8m in height. Twelve beams had a T-shaped cross-section, whereas three beams were rectangular. For the main reinforcement either 4 bars d_s20mm or 3 bars d_s16mm were used. The diameter of the web rebars was 10, 12 or 16mm. The vertical bar spacing was 100, 150 or 200mm. One concrete mix was used. The average 28-day 150mm cube compressive and tensile splitting strength were 50.0 and 3.0MPa, respectively.

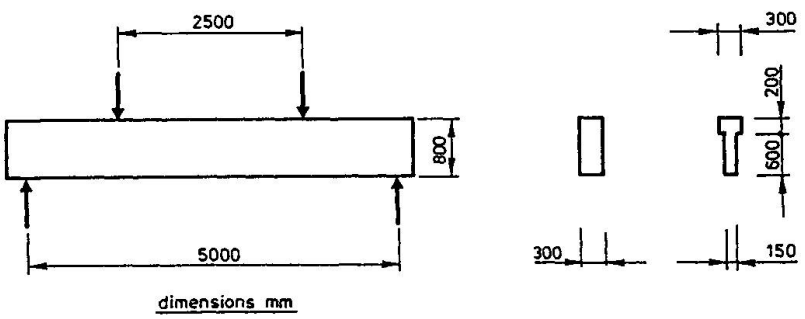

Fig. 2 Cross-sections and side-view of the beams tested

3.2 Measurements

The crack width measurements were restricted to the middle 2.3m of the uniform bending moment zone. Measurements were taken on both sides of the beams by means of a microscope. Nine horizontal lines were drawn, covering about the lower 450mm of the beams. Cracks were measured at each position where the cracks intersected these lines.

3.3 Experimental results

Figure 3 presents the influence of the web rebar spacing on the mean crack spacing. For comparison, the results of a beam without web rebars are also given. The dominant cracks are accompanied by minor cracks. Therefore, the sum of the widths of the dominant cracks is less than the measured beam elongation. This was also observed in [8]. It was found that :

$$w_m = 0.75 l_m \epsilon_{sm} \quad [mm] \qquad (5)$$

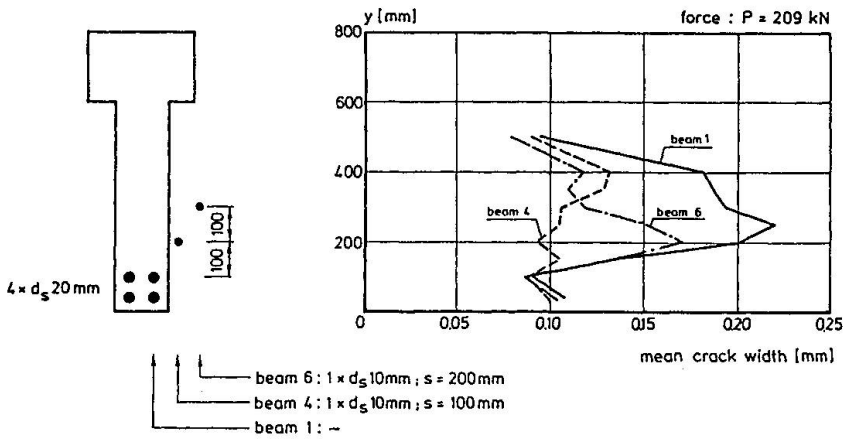

Fig. 3 The influence of web reinforcement on the mean crack width [9].

4. THEORETICAL MODEL

4.1 No web reinforcement

In the case no web reinforcement is applied, the crack pattern is similar to the one observed in a concrete wall cast on a hardened slab [10], see figure 4a. The mean crack spacing halfway down the web is approx. $l_m = h - h_x - (h-d)$. When comparing this value with the average crack spacing at the main reinforcement according to the Eurocode II a family of curves is obtained for various values of h and d_s (fig. 4b). The figure shows that the ratio $l_m$web / $l_m$main reinf.= 4, which is reported by several authors, applies for the region $0.6 < \rho < 1.0\%$.

4.2 Web reinforcement

If sufficient web reinforcement is applied, cracks can be forced to extend into the web. Figure 5a presents the corresponding relation between steel stress in the web rebars, the bar diameter and the bar spacing, whereas the transfer length is shown in figure 5b. It was assumed that f_{ct}=2.5MPa and that the distance from the side face of the member to the centre of the web rebars is b_1=50mm. In the case the actual parameters differ from these values, the results from the design curves (indicated by the superscript 'd') must be corrected by the following formulae:

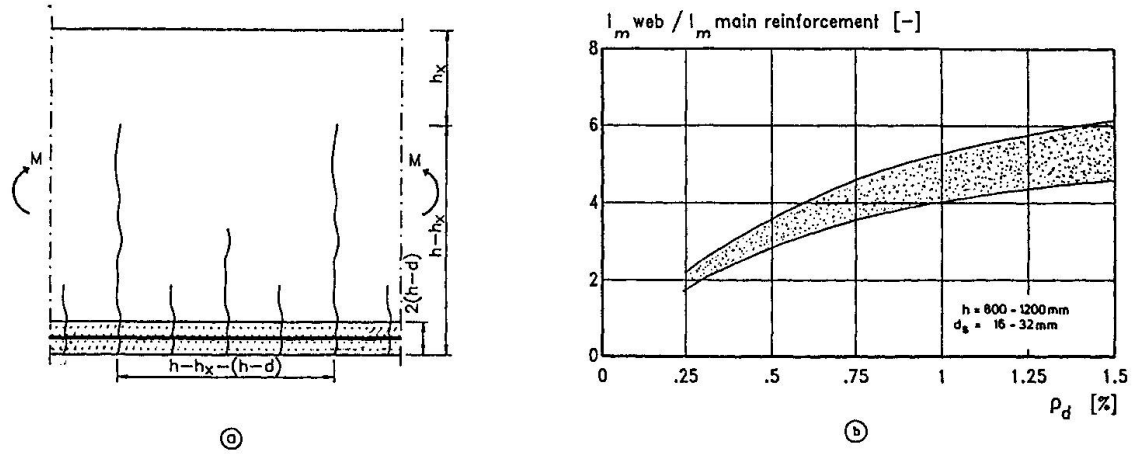

Fig. 4 Crack pattern in a deep beam without web reinforcement (a) and the ratio between the mean crack spacing in the web and at the bottom (b)

$$\sigma_{s,cr} = \sigma^d_{s,cr}(0.015b_1+0.125)\frac{f_{ct}}{2.5} \qquad \text{[MPa]} \qquad (6)$$

$$l_t = l^d_t(0.015b_1+0.125) \qquad \text{[mm]} \qquad (7)$$

The crack pattern is fully developed if the average surface strain exceeds $\sigma_{s,cr}/E_s$. The average crack spacing is then $l_m=l_t$. Since one aims at the use of a rather limited amount of web reinforcement, the web crack pattern is mostly not fully developed.

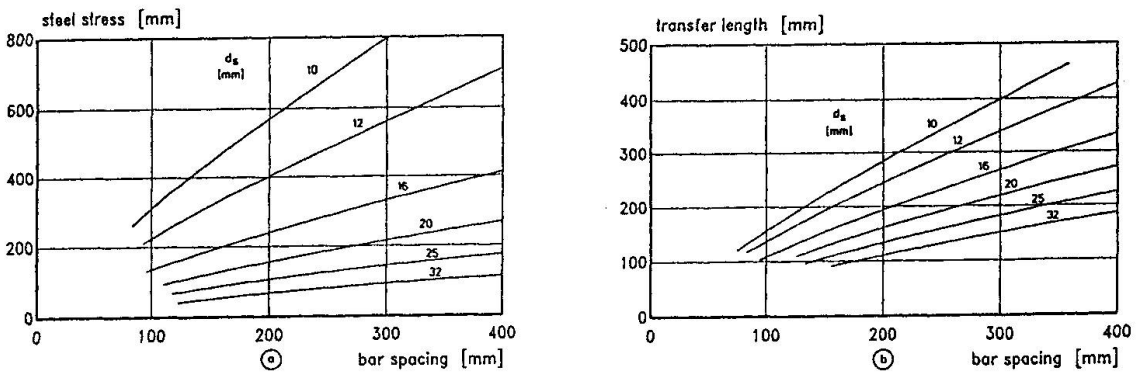

Fig. 5 The steel stress initiating cracking in the web (a) and the transfer length (b).

5. PRACTICAL DESIGN RULES

The previous sections provide the calculation method of web crack widths. Since the crack pattern is assumed not to be fully developed, long-term or varying loading is assumed to cause an increase of the transfer length by 40%. The characteristic long-term crack width is:

$$w_k = 1.3 l_t \epsilon_{s,cr} \qquad \text{[mm]} \qquad (8)$$

Formula (8) is presented in figure 6a in the case f_{ct}=2.5MPa and b_1=50mm. In the case the parameters differ from the assumed values, the result from the design curve is corrected as follows:

$$w_k = w_k^d(0.015b_1+0.125)^2 \frac{f_{ct}}{2.5} \qquad [mm] \qquad (9)$$

The part of the web h_w where web reinforcement is required can be calculated according to present design rules [12].

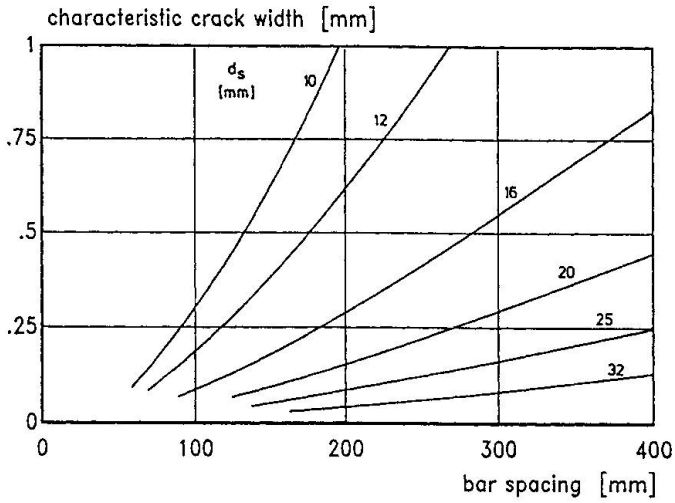

Fig. 6 Web crack width in a not fully developed crack pattern.

ACKNOWLEDGEMENT

The financial support from the Netherlands Technology Foundation (STW) is gratefully acknowledged.

REFERENCES

1. LEONHARDT, F., Ueber die Kunst des Bewehrens von Stahlbetontragwerken. Beton- und Stahlbetonbau, August/Sept. 1965.
2. CEB, Bulletin d'information no 61, 1967.
3. SCHIESSL, P., WOLFEL, E., Konstruktionsregeln zur Beschränkung der Rissbreite. Beton- und Stahlbetonbau, January 1986.
4. FEHLING, E., KONIG, G., Zur Rissbreitenbeschränkung im Stahlbetonbau. Beton- und Stahlbetonbau, June/July 1988.
5. LEONHARDT, F., Vorlesungen über Massivbau. Teil 3, 1974.
6. BEEBY, A.W., An investigation of cracking on the side faces of beams. Cement and Concrete Association, Technical Report 42.466, 1971.
7. BREEN, J.E., FRANTZ, G.C., Cracking on the side faces of large reinforced concrete beams. Univ. of Texas, Report 198-1F, 1978.
8. BEEBY, A.W., Concrete in the oceans; Cracking and corrosion. Cement and Concrete Association, Technical Report no. 1, 1978.
9. BRAAM, C.R., Deep reinforced concrete beams; Experimental results. Delft University of Technology, Stevin Laboratry, Report 25-5.90.5, 1990.
10. BRAAM, C.R., Control of crack width in deep reinforced conrete beams. Dissertation, Delft University of Technology, 1990.
11. CUR, Cracking due to shrinkage and temperature variation in walls (in Dutch). CUR, Report no. 85, 1978.
12. CEB, Bulletin d'information no. 143, 1981.

Influence of Temperature on the Cracking in Reinforced Concrete

Influence de la température sur la fissuration du béton armé

Temperatureinfluss auf das Rissverhalten von Stahlbeton

Lucie VANDEWALLE
Senior Assistant
Catholic Univ. of Leuven
Leuven, Belgium

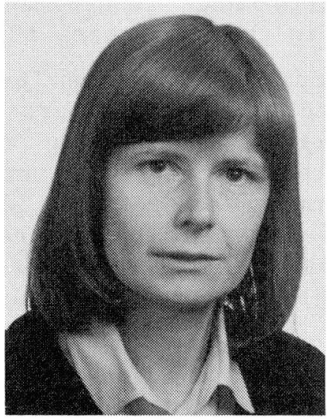

Lucie Vandewalle, born 1958, received her engineering degree and Ph.D. at the Catholic University of Leuven. Her field of research mainly concerns reinforced concrete and the bond between steel and concrete.

SUMMARY

Crack spacings and crack widths in a reinforced concrete structure can be calculated by means of methods which are based on the τ-s-relation of a rebar in concrete. The τ-s-relation, presented in this paper, holds both for normal and cryogenic temperatures. From calculations it follows that the mean crack spacing at −165°C is almost the same as the value at+ 20°C, the mean crack width and the mean steel stress at −165°C, on the other hand are substantially greater than the corresponding values at +20°C.

RÉSUMÉ

L'espacement et l'ouverture des fissures peuvent être calculés à l'aide de méthodes basées sur la relation τ-s d'une barre d'armature dans le béton. La relation τ-s, présentée dans la présente communication, est valable pour les températures normales ainsi que pour des températures très basses. Des calculs démontrent qu'à −165°C l'espacement moyen des fissures est à peu près le même qu'à +20°C. Cependant l'ouverture moyenne des fissures ainsi que les contraintes moyennes dans l'armature sont plus élévées à −165°C qu'à +20°C.

ZUSAMMENFASSUNG

Rissabstände und Rissbreiten in einer Stahlbetonkonstruktion können mittels Methoden, die auf dem τ-s-Verhältnis eines Bewehrungsstabes im Beton beruhen, berechnet werden. Das in dieser Abhandlung beschriebene τ-s-Verhältnis gilt für normale und extrem tiefe Temperaturen. Aus Berechnungen ergibt sich, dass der mittlere Rissabstand bei −165°C ungefähr derselbe ist wie bei +20°C; die mittlere Rissbreite und die mittlere Stahlspannung sind im Gegenteil bei −165°C bedeutend grösser als die entsprechenden Werte bei +20°C.

1. INTRODUCTION

Because of the low tensile strength of concrete, both at normal and cryogenic temperatures, cracks are likely to occur in concrete constructions.

Crack control, which means the limitation of crack widths, plays a significant part in all types of structural concrete. Controlling crack widths can be applied for reasons of appearance, corrosion protection or tightness with regard to gas or liquid permeability. The cracking situation of the structural concrete has also an important influence on the extent of deformation. Deformation in cracked state can be a multiple of that in uncracked state [1,2]. The previous mentioned performance requirements are imposed by the supporting function of the structure in the serviceability limit state.

The following is an attempt to determine "quantitatively" crack spacings and crack widths in reinforced concrete members for temperatures ranging between +20°C and -165°C. The cracking behaviour of structural concrete is mainly dependent on the way a tensile force, exerted on a "reinforcement bar", is transferred to the "enveloping concrete" by way of "bond stresses". The bond between the reinforcement bar and the concrete is, consequently, one of the basic properties which make reinforced concrete possible. According to [1], concrete, reinforcing steel and bond behaviour can be called the subsystems of structural concrete.

Researchers [3,4,5,6] have found that the concrete properties, consequently also the bond stresses, are highly influenced by temperature. Especially the amount of chemically unbound water in the concrete plays an important part at low temperatures.

2. FROM τ-s RELATION TO CRACKING AT NORMAL TEMPERATURE

The bond between the reinforcement and the concrete may be described in an idealized way as a shear stress between the surface of the reinforcement bar and the surrounding concrete. The bonding mechanism may be expressed by the relation between the shear stress τ and the relative displacement s between the reinforcement bar and the concrete.

On the basis of the results of an extensive test programme of beam tests both at normal and cryogenic temperatures, executed at the Department of Civil Engineering of the K.U.Leuven, the τ-s-relation is mathematically approximated by the expression :

$$\tau = \tau_u \, (1 - \mu e^{-\lambda s}) \tag{1}$$

with μ = 0,78 and λ = 9,78. The ultimate bond strength τ_u is a function of the concrete cover on the rebar (c), the concrete quality (f_c,f_{ct}) and the temperature :

$$\frac{c}{\phi} \leq 3 \qquad \frac{\tau_u}{f_c} = \frac{\sqrt{K}}{2} \left[1 + (1 - K)\, 0{,}353 \frac{\frac{\phi}{2} + c}{\frac{\phi}{2}}\right] \tag{2a}$$

$$\frac{c}{\phi} > 3 \qquad \frac{\tau_u}{f_c} = \frac{\sqrt{K}}{2} \left[1 + (1 - K)\, 2{,}473\right] \tag{2b}$$

with $K = f_{ct}/f_c$. The temperature effect has been completely taken into account by way of the quantities f_c and f_{ct}. The expression (1) has the merit of describing the τ-s-course up to the bond fracture.

For a centrically loaded reinforced concrete tensile bar (Fig. 1) the transfer

of the tensile force in the bar to the surrounding concrete is, for an elementary part dx, described by the following differential equation :

$$\frac{\phi\ E_s}{4(1 + \frac{E_s}{E_c}\omega)} \frac{d^2 s}{dx^2} = \tau_x \tag{3}$$

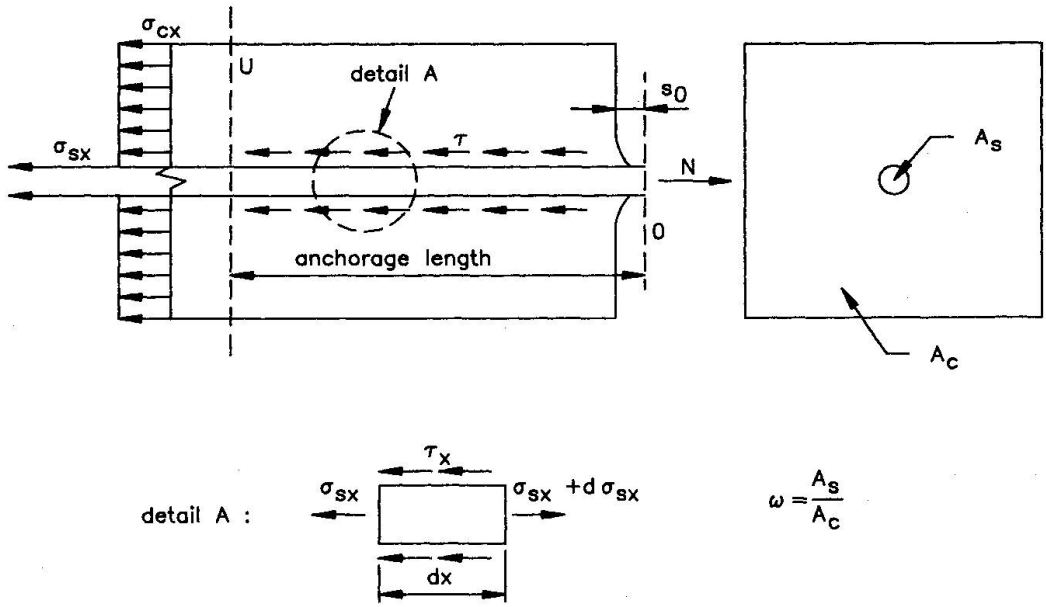

Fig. 1 Reinforced concrete tensile bar subjected to a force N.

The length, needed for the transfer of the tensile force N, is called the anchorage length. At the end of the anchorage length (in U, see Fig. 1) the concrete and the steel strain are equal. If the force N is increased in such a way that the concrete tensile stress at U becomes equal to the concrete tensile strength, i.e. $N = N_r$, the length OU is equal to the anchorage length ℓ_T. After inserting (1) in (3) and numerically solving the differential equation (3), one obtains the anchorage length ℓ_T belonging to the force N_r :

$$N_r = A_s\, \sigma_{s,r} \tag{4}$$

with

$$\sigma_{s,r} = f_{ct}\ (\frac{1}{\omega} + \frac{E_s}{E_c}). \tag{5}$$

When subjecting a reinforced concrete tensile bar to a force N_r it is assumed that in the first instance all "first-order cracks" are formed. A first-order crack is by definition a crack at such a distance from the nearest crack that the transfer zones of both cracks do not influence each other (Fig. 2). This requires that the distance between the two cracks in question is greater than or equal to 2 ℓ_T. The crack width w_r, immediately after cracking is then equal to :

$$w_r = 2\ s_{r,0}.$$

After the completion of this first-order crack pattern, the so-called second-order cracks will be formed. The distance between two cracks is now smaller than 2 ℓ_T. With the second-order cracks the transfer zones overlap partly. After the completion of the second-order crack pattern the distance between two

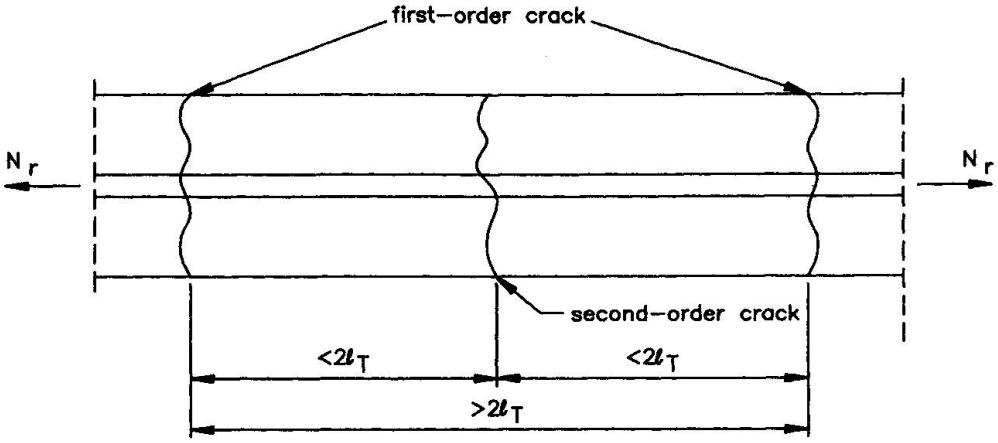

Fig. 2 First-order and second-order cracks.

cracks is at least ℓ_T. Only at this distance, taken from another crack, does the concrete stress attain the concrete tensile strength again. The crack width of second-order cracks varies, as a function of the crack spacing, between 75 % and 100 % from that of the first-order cracks.

In reality the distribution of cracks is very irregular because it is determined by stochastic effects. The concrete tensile strength is, indeed, a quantity which is liable to a relatively great dispersion. Therefore strictly speaking, only minimum and maximum values can be given for the crack spacing (L_r) and crack width (w_r) respectively. A mean value for these quantities, obtained by making the calculations with the mean concrete tensile strength or another intermediate value is consequently to be interpreted with caution.

3. INFLUENCE OF TEMPERATURE ON THE CRACKING BEHAVIOUR OF STRUCTURAL CONCRETE

The above described theory may also be used for the determination of crack spacings and crack widths at low temperatures, provided that the coefficients of expansion of the concrete (α_c) and the steel (α_s) do not differ too much. This is indeed the case for concrete with a low moisture content. If, however, the concrete has a high moisture content, a correction has to be made on f_{ct}. The coefficient of expansion of the concrete is indeed at low temperatures a good deal smaller than the one of the reinforcement steel [5]. This has as a consequence that the concrete, whilst cooling off, is as it were prestressed. The tensile stresses which are formed in the steel when the temperature is going down from T_n (= normal temperature) to T_ℓ (= low temperature) may be calculated for a centrically reinforced concrete bar with :

$$\sigma_s = \int_{T_n}^{T_\ell} \frac{E_s(T)}{(1 + \frac{E_s(T)}{E_c(T)}\omega)} (\alpha_s(T) - \alpha_c(T))dT \qquad (6)$$

with $E_s(T)$: modulus of elasticity of steel at temperature T (N/mm²)
$E_c(T)$: modulus of elasticity of concrete at temperture T (N/mm²)
$\alpha_s(T)$: coefficient of expansion of steel at temperature T (1/°C)
$\alpha_c(T)$: coefficient of expansion of concrete at temperature T (1/°C).

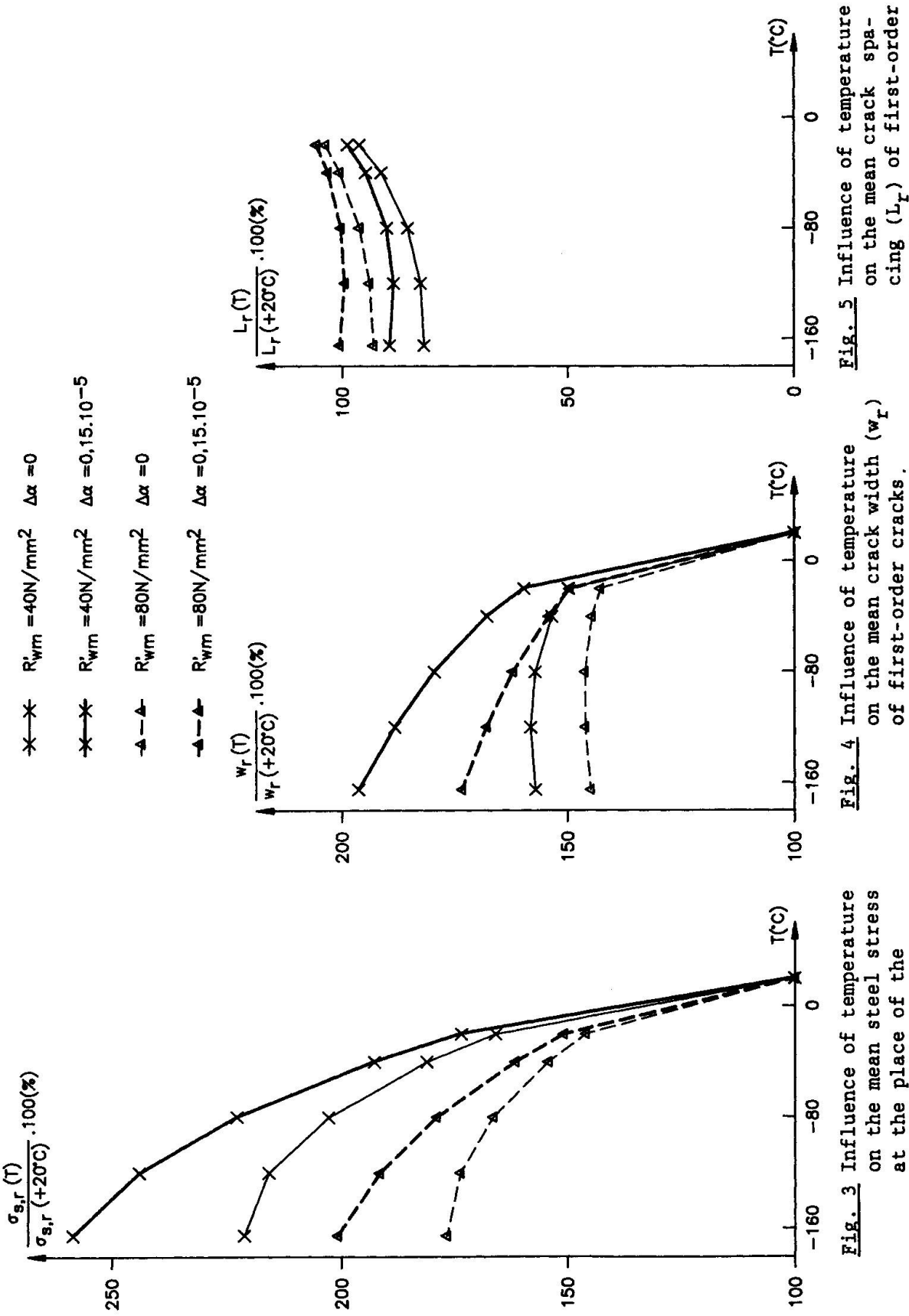

Fig. 3 Influence of temperature on the mean steel stress at the place of the crack ($\sigma_{s,r}$).

Fig. 4 Influence of temperature on the mean crack width (w_r) of first-order cracks.

Fig. 5 Influence of temperature on the mean crack spacing (L_r) of first-order cracks.

The compressive stresses which are created in the concrete at the same time are then :

$$\sigma_c = -\sigma_s \omega . \tag{7}$$

The internal prestress may be considered a virtual increase of the tensile strength of the concrete at that temperature and thus brings about a "postponement" of the crack formation at low temperatures. In the case of concrete with a high moisture content the uniaxial tensile strength f_{ct} has to be transformed into a virtual tensile strength $f_{ct}^*(T_\ell)$ for the calculation of $\sigma_{s,r}$ by using (6) and (7) :

$$f_{ct}^*(T_\ell) = f_{ct}(T_\ell) + \omega \int_{T_n}^{T_\ell} \frac{E_s(T)}{(1 + \frac{E_s(T)}{E_c(T)}\omega)} (\alpha_s(T) - \alpha_c(T))dT . \tag{8}$$

The remaining characteristics of the concrete and the steel (f_c, f_{ct}, E_c and E_s) at low temperatures may be calculated on the basis of the corresponding values at room temperature [3,4].

Results of the qualitative course of the mean stress in the rebar at the place of the crack ($\sigma_{s,r}$), the mean crack width (w_r) and the mean crack spacing (L_r) as functions of temperature are shown in the Figs. 3, 4 and 5. At the calculation of the concrete tensile strength it is assumed that for one thing there is no difference between the coefficient of expansion of the steel and the concrete, consequently $\Delta\alpha = 0$, and for another that difference is constant over the whole temperature range and equal to $0{,}15.10^{-5}$ per °C [7].

From the Figs. 3, 4 and 5 it follows that the mean steel stress ($\sigma_{s,r}$) and the mean crack width (w_r) increase considerably, if temperature falls. This increase is so much the greater as the difference in the coefficient of expansion between steel and concrete increases and the mean compressive strength of concrete at room temperature decreases. The mean crack spacing (L_r) on the contrary varies relatively less (slight decrease) as a function of temperature.

REFERENCES

1. WICKE M., Performance Requirements. IABSE Colloquium "Structural Concrete", Stuttgart, April 10-12, 1991.

2. BRUGGELING A.S.G., An engineering model of structural concrete. IABSE Colloquium "Structural Concrete", Stuttgart, April 10-12, 1991.

3. VANDEWALLE L., Hechting tussen wapening met verbeterde hechting en beton bij gewone en cryogene omstandigheden. Ph.D. Thesis, Katholieke Universiteit Leuven, 1988 (in Dutch).

4. ROSTASY F.S., SCHEUERMANN J., Verbundverhalten einbetonierten Betonrippenstahls bei extrem tiefer Temperatur. Deutscher Ausschuss für Stahlbeton, Heft 380, 1987, p.43-105 (in German).

5. VAN DER VEEN C., Properties of concrete at very low temperatures - A survey of literature. T.U. Delft, 1987.

6. BROWNE R.D., BAMFORTH P.B., The use of concrete for cryogenic storage - A summary of research, past and present. First International Conference on Cryogenic Concrete, Newcastle, March 1981.

7. FASTABEND M., Zum Trag- und Verformungsverhalten lastbeanspruchter Stahlbetonkonstruktionen bei tiefen Temperaturen. Forschungsberichte aus dem Fachbereich Bauwesen, Universität Gesamthochschule Essen, Heft 42, Juni 1987.

Cracking Analysis of Concrete Structures

Analyse de la fissuration des structures en béton

Rissbildungsanalyse von Betonbauten

Fiodor BLJUGER
Sen. Researcher
Nat. Build. Res. Inst.
Haifa, Israel

F. Eph. Bljuger, born 1929, has been Researcher and Adjunct Lecturer at the Faculty of Civil Engineering, Technion since 1974. Prior to this he was Senior Scientist and Head of Laboratory at Moscow Institutes, USSR since 1963. He is the author of many articles on reinforced concrete and of the book «Design of Precast Concrete Structures», UK, 1988.

SUMMARY

A probabilistic approach based on an experimental model and on the variation characteristics of concrete strength and load, is presented. Traditional estimation of serviceability in terms of cracking is shown to yield significantly different reliabilities for concrete structures. The situation may be improved with the aid of suitable analysis; in any event, the traditional approach should be revised.

RÉSUMÉ

Une approche probabiliste basée sur un modèle expérimental est mise en évidence; elle tient compte de la variation des caractéristiques de résistance du béton, ainsi que de la charge. En effet, l'approche traditionnelle de l'état de service basée sur la fissuration est présentée, afin de montrer qu'elle peut mener à des sécurités différentes. Cette situation peut et doit être améliorée à l'aide d'une analyse appropriée.

ZUSAMMENFASSUNG

Eine probabilistische Methode, basierend auf einem experimentellen Modell und auf Variationscharakteristiken von Betonfestigkeit und Belastung, wird dargestellt. Die bisherige Erfassung des Gebrauchszustandes in Form von Rissbreitennachweisen liefert deutlich andere Aussagen für die Zuverlässigkeit von Betonkonstruktionen. Die Situation kann mit Hilfe einer geeigneten Analyse verbessert werden; auf jeden Fall sollten die traditionellen Verfahren überprüft werden.

1. INTRODUCTION

The cracking resistance of structures in bending defines their serviceability in terms of premature crack appearance and excessive deflections, depending on the cracking moment [1-4]. It is of prime importance in modern structures made of high-grade concrete [7]. In practice, this serviceability is assured by semi-probabilistic design methods, using deterministic values of loads, material strengths and criteria for the limit state. In reality, crack appearance in a structure complies with a particular probability. Probabilistic cracking analysis of some concrete structures has shown that the main influence on the probability of crack appearance is due to the lengthwise variation of concrete strength over the structure and to the variability of mean concrete strength of the members within their general population, as well as to the load variability [5-6].

In this paper the reliability of particular structures designed under the traditional approach are analysed on the basis of an experimentally obtained model and of the variation characteristics of tensile strength of concrete.

2. STRUCTURAL MODEL FOR ANALYSIS

Consider a simply-supported member of rectangular section under uniformly distributed load (Fig. 1).

Potential cracks in the member in bending may appear at ℓ_s - 40mm spacing (determined experimentally [4] in its middle part - ℓ_o (Fig. 2).

According to [5], the probability of crack appearance in the x-section is:

$$P_x = \frac{\Delta_i}{\sqrt{2\pi}} \sum_{i=-3}^{j} \exp(-i^2/2) \qquad (1)$$

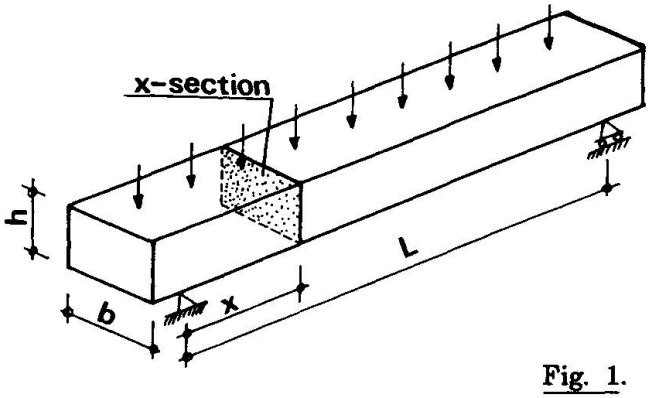

Fig. 1. Member for cracking analysis

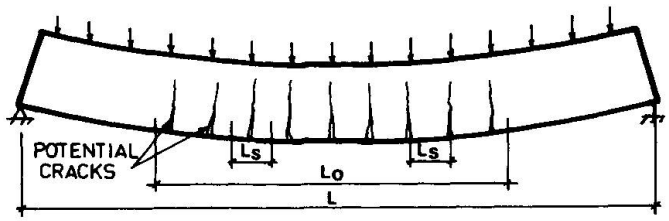

Fig. 2. Model of member with potential cracks.

In (1) Δ_i is the summation step, i is an independent parameter, j in the general case (including prestressed members) is given by:

$$j = [(\frac{M_x}{W} - f_p)/f_{cm} - 1]/C_{v1} \qquad (2)$$

and the Moment M_x in the x-section for a particular uniformly distributed load p is:

$$M_x = \frac{p}{2}(\ell x - x^2) \qquad (3)$$

f_p – residual prestress in most stressed fibre (for non-prestressed member f_p=0).

f_{cm} – mean concrete flexural-tensile strength in member.

C_{v1} – coefficient of lengthwise strength variation.

The probability of crack appearance in the considered member with particular mean concrete strength is:

$$P_{rm} = 1 - \prod_{x_1}^{x_2} (1 - P_x) \qquad (4)$$

According to [1], the mean flexural-tensile strength of concrete is:

$$f_{cmm} = f_{ctm}\,(.6 + .4h^{-.25}) \qquad (5)$$

and the mean tensile strength in the general population is:

$$f_{ctm} = .3\, f_{ck}^{2/3} \qquad (6)$$

As may be inferred from [1], the overall variation coefficient of tensile strength C_v = 18.3%. The variation coefficient of the mean concrete strength in members is:

$$C_{vo} = \sqrt{C_v^2 - C_{v1}^2} \qquad (7)$$

3. PROBABILITY ESTIMATION OF CRACK APPEARANCE IN A MEMBER IN THE STRUCTURE POPULATION

The probability of crack appearance in a member (Fig. 2) with a given grade of concrete under a particular load is evaluated by:

$$P_r = \Sigma\, P_{rm}\, P_m \qquad (8)$$

where P_m –probability of occurrence of the specific mean concrete strength, namely:

$$P_m = \frac{\Delta_m}{\sqrt{2x}} \exp\,(-m^2/2) \qquad (9)$$

The mean concrete strength in a member is defined as: $f_{cm} = f_{cmm}\,(1 + m\,C_{vo})$.

The overall probability of crack appearance in a member within the general population is evaluated by:

$$P = \sum_n P_r P_q \tag{10}$$

$$P_q = \frac{\Delta_n}{\sqrt{2\pi}} \exp(-n^2/2) \quad \text{for} \quad q = q_m(1 + n\, C_q) \ , \tag{11}$$

where: n – independent parameter, q_m – mean load, C_q – coefficient of load variation.

Fig. 3 shows the cracking probability for beams made of C-30 concrete under a characteristic load .0022 MN/m, versus C_q [5].

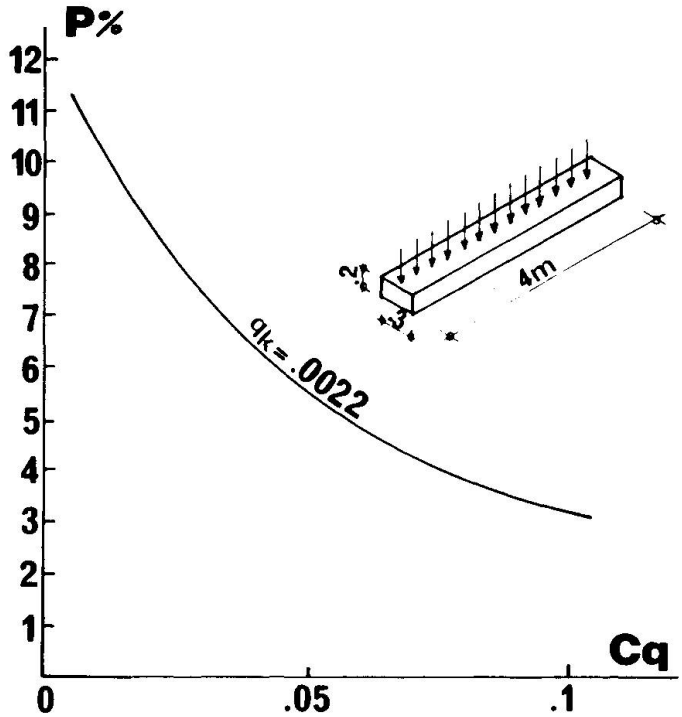

Fig. 3. Probabilities of crack appearance in beam made of C-30 concrete under 0.0022 MN/m characteristic load – versus coefficient of load variation.

4. PROBABILITY ANALYSIS OF MEMBERS WITH VARIABLE CONCRETE STRENGTH UNDER VARIABLE LOADS

The characteristic load for analysis is determined as the load causing crack appearance in the most stressed section of a member:

$$q_k = 8\, f_{cmk}\, W/\ell^2 \tag{12}$$

Numerical analysis results for the members, as shown in Fig. 1 (h=.2m, b=.3m, grade C-50), with different lengthwise strength variations (C_{v1}) – are presented in Fig. 4.

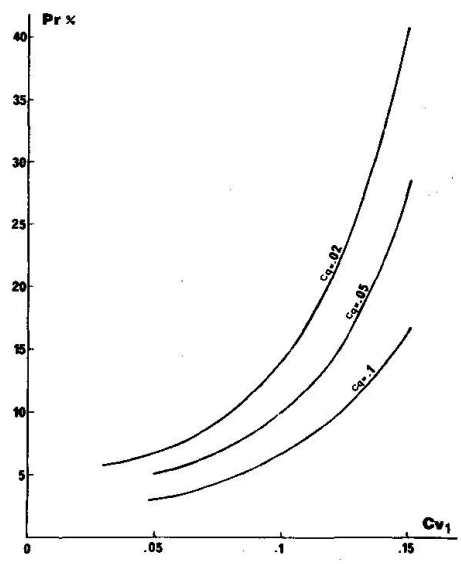

Fig. 4. Probabilities of crack appearance in members vs. lengthwise strength variation (C_{v1}) under the same characteristic load with different variations (C_q).

It is felt that present codes favor design with a wide range of reliability in terms of cracking.

As shown in [6] for composite slabs, the probability of crack appearance in the spans of statically-indeterminate structures should be significantly lower than in simply-supported ones, and such structures may be more reliable. Their reliability depends on the variability of concrete strength in certain parts of the structure, and combinations of low strength make for very low probabilities.

Narrow variation of concrete strength may drastically reduce the probability of crack appearance in a structure. Analysis of cracking probability in members with narrower strength variability under the same mean load (Fig. 5) shows that the reliability of a code-designed structure may be significantly improved through improved homogeneity of the concrete in terms of tensile strength.

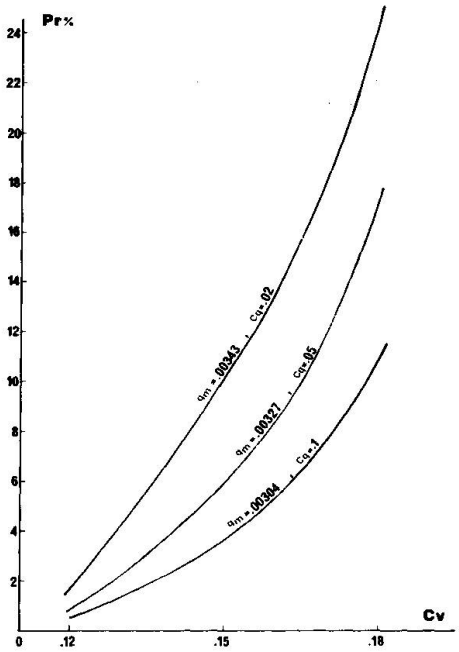

Fig. 5. Probabilities of crack appearance in members under the same mean loads appropriate to their variations - vs. real coefficient of tensile strength variation of concrete.

5. CONCLUSIONS

The analysis shows that traditional estimation of structure serviceability in terms of cracking, yields significantly different reliabilities for concrete structures in bending. Based on probabilistic criteria and statistical initial data, the above situation may be improved with the aid of suitable analysis. In any event the traditional estimation should be corrected by behaviour factors, taking into account the variabilities of concrete strength and load combinations.

The proposed design approach calls for supplementation of the codes by suitable statistical data and by probabilistic restrictions.

As the reliability of a real structure depends on the variability of concrete strength in practice, gradation and strength control of the concrete on the basis of its tensile strength are of extreme importance.

REFERENCES

1. CEB, Comité Euro-International du Béton, CEB-FIP Model Code 1990, First Predraft 1988, Lausanne, 1988.

2. ACI Standard, Building Code Requirements for Reinforced Concrete (ACI 318-77), ACI Manual of Concrete Practice, part 3, Detroit, Michigan, 1986, pp. 318-330.

3. SNiP 2.03-01-84, Building code for Design of Reinforced and Non-Reinforced Concrete Structures, S.I., Moscow, 1985 (in Russian), 77 pp.

4. Bljuger, F., Cracking Resistance of Concrete Members in Bending, ACI Journal, July-August, 1985, pp. 467-474.

5. Bljuger, F., Serviceability of Buildings - Probabilistic Approach, Proc. of Symposium/Workshop on Serviceability of Buildings, Ottawa, Canada, May, 1988, pp. 73-85.

6. Bljuger, F., Design of Precast Concrete Structures, Ellis Horwood Publ., U.K., 1988, 297 pp.

7. Bljuger, F., Some Potentialities of High-Strength Concrete Structures, Proc. of Workshop on the Future of Construction, CIB W82, Haifa, 1989, pp. 23-41.

Watertight Concrete Structures

Etanchéité des structures en béton

Wasserundurchlässige Betonkonstruktionen

Dieter KRAUS
Prof. of Civil Eng.
Universität der Bundeswehr
Munich, Germany

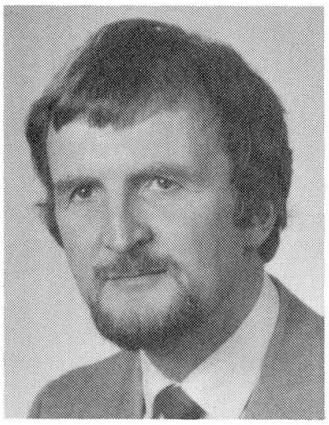

Dieter Kraus, born 1941, obtained his civil engineering degree in 1969 and his Dr.-Ing. degree in 1975 at the Technische Universität München. After 10 years as project engineer in a construction company he joined the Universität der Bundeswehr München as Professor for Concrete Engineering.

Otto WURZER
Civil Eng.
Universität der Bundeswehr
Munich, Germany

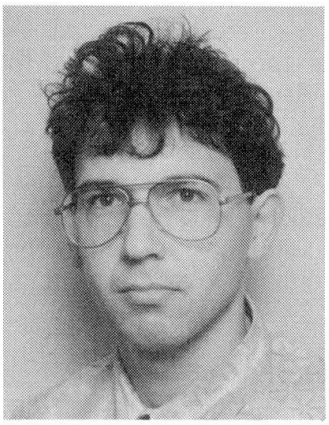

Otto Wurzer, born 1964, obtained his civil engineering degree at the Technische Universität München. After one year, as a member of a construction company, he joined the Universität der Bundeswehr München as a research assistant.

SUMMARY
For various projects like basements or subway-tunnels, which are built and remain permanently in the groundwater, watertight concrete structures are of increasing importance. The paper presents general design criteria for such constructions. It deals, in particular, with loading due to restraint under construction and final conditions, waterproof designs and their consideration in different design codes.

RÉSUMÉ
L'étanchéité est d'importance grandissante pour des projets variés, qui tels que fondations et tunnels, restant en permanence sous le niveau de la nappe phréatique. Cet article souligne les critères généraux de dimensionnement concernant ces types de constructions: l'accent est mis sur les contraintes en phase constructive et finale, la conception de l'étanchéité elle-même ainsi que sa prise en compte dans diverses normes de dimensionnement.

ZUSAMMENFASSUNG
Im Rahmen verschiedener Bauaufgaben wie Gründungen und U-Bahn-Tunnel, die in das Grundwasser einbinden, gewinnen wasserdurchlässige Betonkonstruktionen immer mehr an Bedeutung. Im folgenden sollten daher Entwurfskriterien für derartige Bauwerke vorgestellt werden. Insbesondere wird auf die in den verschiedenen Bau- und Endzuständen auftretenden Zwangsbeanspruchungen, auf die Nachweise der Dichtigkeit sowie deren Behandlung in den Normen eingegangen.

1. INTRODUCTION

The production of watertight concrete structures without additional waterproofing provisions is being practised successfully since many years [2], [4]. Projects which need watertight structures may be classified in three groups:

- As protection of structures against underground water penetration in cases in which the ground water level is located above the foundation slab (underground garages, cellars, subway tunnels).
- As protection of underground water against contaminating substances from purification plants, from manure dumps or from catch basins of chemical plants.
- Water reservoirs require a certain grade of impermeability (leakage rate) because of operating conditions, although their contents do not endanger the underground water.

The determination of the impermeability can result from two procedures, which differ on their practical evaluation:

- Limitation of the moisture content at the air side regarding the impermeability criteria: - complete dry - dry to a great extent - capillarily soaked -
- Limitation of the amount of moisture penetrated through the cross section (leakage rate).

The permeability or leakage of a buildung can by caused by its materials (because of porosity, that is the concrete texture) or by the construction (because of cracks, improperly performed construction joints or expansion joints, leakages within the range of perforations for installations).

The production of a concrete with enough tight texture is primarily a concrete technological problem. The causes of leakage dependent on the construction can be obviated by means of a corresponding clear construction, that harmonizes optimally with the building function (through states of stress due to loads and restraints which are statically easy to survey and through a practicable construction).
The following report deals mainly with the possible proof and examination of usefulness.

2. STATES OF STRESS

2.1 Causes of the states of stress

The states of stress acting on reinforced concrete structural parts may be classified according to the instant at which they occur and according to their causes. According to the instant of occurrence one may distinguish between:

- states of stress during the construction
- states of stress after the end of the construction

According to the causes one may distinguish between:

- states of stress due to loads
- states of stress due to restraints

Stress resultants due to loads (for example owing to dead load or to traffic load) can be easily calculated in most cases. The realistic calculation of stress resultants due to restraints, however, cause considerable difficulties. The dissipation of the heat of hydration [1], shrinkage, temperature and settlements can be regarded as the main reasons for the appearance of restraint stresses.

2.2 Restraint stress resultants

2.2.1 Calculation

The restraint stresses of a thick structural member of concrete (Fig. 1) often have a non-linear development over the thickness of the structure. These non-linear restraint stresses can be divided into a constant part (shortening by restraint), a linear part (change of curvature by restraint) and a non-linear part (residual stresses). It is characteristic for the state of residual stresses, that these stresses do not create stress resultants.

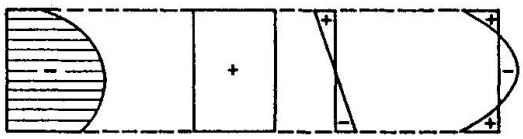

Fig. 1 Stress-strain of a thick concrete member due to non-linear restraint

The following denotations are valid for the calculation of the restraint stress resultants:

$$N_{zw} = \epsilon_r \cdot (EA_c)_{ef} \cdot \delta \cdot c_s \qquad (1)$$

$$M_{zw} = \chi_r \cdot (EI_c)_{ef} \cdot \delta \cdot c_s \qquad (2)$$

$(EA_c)_{ef}$: effective longitudinal stiffness
$(EI_c)_{ef}$: effective bending stiffness
c_s : reduction of restraint by creep
δ : grade of impediment by the structural member

The effective stiffness used in equations (1) and (2) can be studied clearly by a centrically loaded member in Fig. 2.

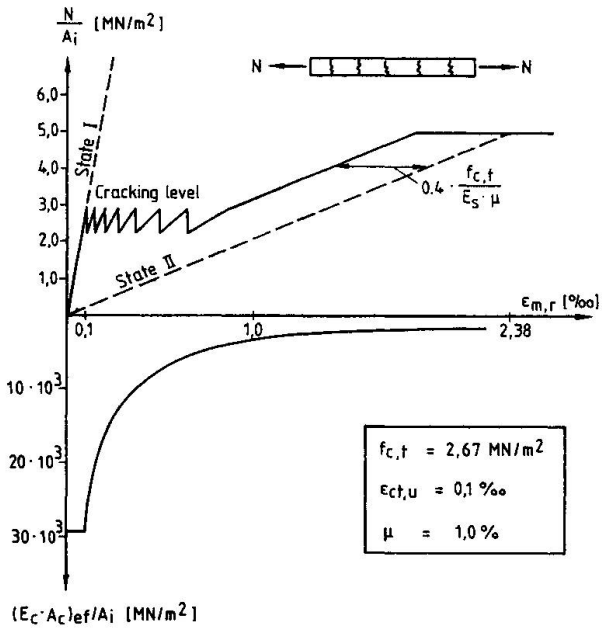

Up to the load of the first crack ($\sigma_c = f_{c,t}$) the structural member remains in state I. After that a successive cracking starts. When the fully developed cracking pattern is reached, there is another ascent of the stress - strain - diagram, which is almost parallel to the plain state II, at a distance of $0{,}4 \cdot f_{c,t}/E_s \cdot \mu$ (tension-stiffening-effect)

f_{ct} : tensile strengh of concrete
ϵ_{ctu} : corresponding strain of concrete
E_s, E_c : modulus of elasticity of steel and of concrete
μ : percentage of reinforcement

Fig. 2 Stress-strain-relationship and effective stiffness of a concrete member under longitudinal force ($A_i = A_c \cdot (1 + n \cdot \mu)$; $n = E_s/E_c$)

At the final state the restraint effects (change of temperature, settlements) are of minor importance for the constructions, which are mostly box-shaped and bedded to the ground. During the construction however, the restraint effects, such as dissipation of the heat of hydration and shrinkage, are to be analysed more carefully. That is especially important for monolitically connected structures, which are cast however at different times. Regarding the dissipation of the heat of hydration, the calculation of the corresponding restraint stress resultants is very difficult because reliable informations about modulus of elasticity, reduction by creep and coefficient of thermal expansion for new (not matured) concrete are hardly available. An estimation of the restraint forces through shrinkage is possible in form of a difference value for shrinkage at structural components which are cast at different times (foundation slab/walls).

2.2.2 Evaluation of the limits of stress resultants for special structural components

- Regarding the load for first cracking

The upper limit of the restraint stress resultant at the instant of appearance of the first crack can bei determined through the sectional forces of the crack for state I.

$$N^{I}_{Crack} = A_c \cdot f_{ct,ef} \quad (3)$$

$$M^{I}_{Crack} = W_c \cdot f_{ct,ef} \quad (4)$$

- Regarding the interaction soil - building

For foundation slabs it is possible to get further limitations for the normal force due to restraint considering the effects of frictional forces. In this connection it has to be examined, whether slide of the foundation slab with respect to the soil results or whether a total bond exists. Fig. 3 shows the diagram of the forces at the contact surface with the soil and the forces at the foundation slab in the case of friction, bond and a combination of both effects.

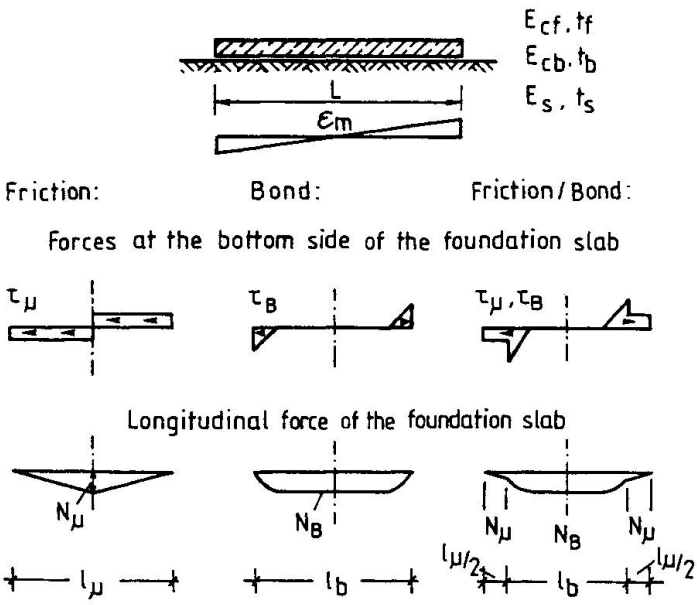

Fig. 3 Longitudinal forces due to restraint of a foundation slab

In the case of skidding friction the maximum normal force in the foundation slab results:

$$N_{\mu} = 1/2\, \mu\, g\, l_{\mu} \quad (5)$$

Assuming a total bond between foundation slab and soil the following value results:

$$N_B = \frac{\epsilon_m}{\dfrac{1}{E_{cf}\, t_f} + \dfrac{1}{(2\, E_s\, t_s + E_{cb}\, t_b)}} \quad (6)$$

3. PROOF OF WATER TIGHTNESS

3.1 Method of proof

The proof of watertightness is made for the limit state of serviceability. In additon to the demonstration of an available sufficient tight concrete texture, the leakage caused by construction is limited further through the following criteria.

- sufficient depth of the compression zone: $x > x_{nec}$
- limitation of the width of separating cracks: $w < w_{adm}$
- limitation of tensile stresses in concrete: $\sigma_{ct} < f_{ct}/\nu$

3.2 Proof of the depth of the compressive zone

The procedure is based upon the requirement that the resulting depth of the compression zone in working conditions must be greater than the depth of penetration of water in the watertight concrete, which is produced according to technological points of view. The determination of the depth of the compression zone in working conditions for bending with normal forces leads to a cubical equation if linear elastic behaviour is assumed for concrete and for steel.

Determinant parameters:
- the percentage of reinforcement ratio μ_1/μ_2
- the relative edge distances $d_{1,2}/h$
- the E-moduli ratio $n=E_s/E_c$
- the relative eccentricity e/h

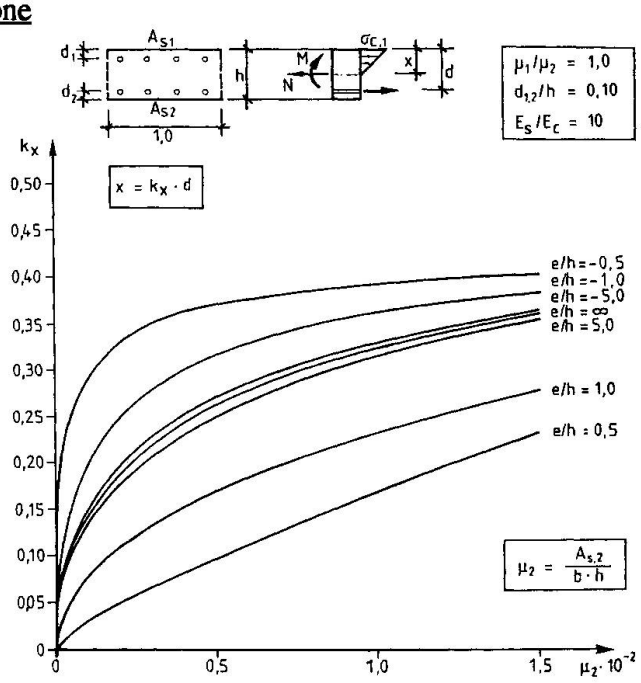

Fig. 4 Depth of compression zone under servie load

3.3 Proof of the width of crack

Separating cracks are critical with respect to the watertightness of a concrete structure. All national and international standards have renounced to fix an admissible width of crack w_{adm} in relation to watertightness (see paragraph 4). The determination of such a limit value needs the careful examination of the special function of the building and of environment conditions as for example the value of the water pressure acting on the examined structural members. In the references ([3], [4], [5], [7]) however, values for w_{adm} = 0,1 to 0,2 mm are given. There are many theories which calculate the theoretical width of crack at the limit state of serviceability. The principles of equation (7) based on fig. 5 are common to all theories. Based upon this fundamental equation it is possible to control cracking through concrete technological provisions and through the adequate choice of reinforcement (steel stresses, diameters of bars) with minimum steel areas according to the restraint stress resultants given in paragraph 2.

$$w_m = s_{rm} \cdot \epsilon_{sm} \qquad (7)$$

w_m : average width of crack
s_{rm} : average distance between cracks
ϵ_{sm} : average strain of steel

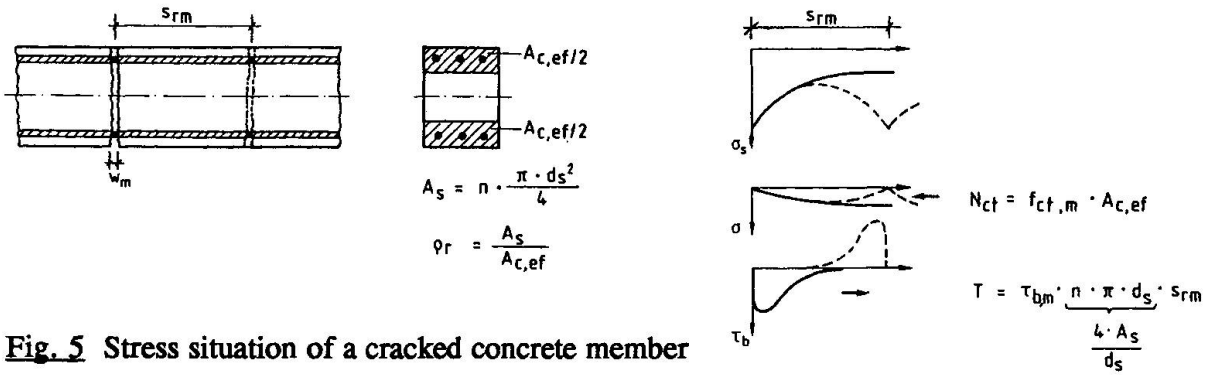

Fig. 5 Stress situation of a cracked concrete member

3.4 Limitation of the concrete tensile stresses in state I

On the one hand this criterium leads to relativ thick strctural members, which are sensible to states of stress due to restraint, and on the other hand the accurate knowledge of the tensile strength of concrete is necessary, although the values show the well known large statistical dispersion. For that reason the proof based on the latter criterium should be given up.

4. COMPARISON OF NATIONAL AND INTERNATIONAL STANDARDS

Whereas in many standards the production of a concrete with tight texture is mentioned, as Tab. 1 shows, nearly all standards which have been studied have renounced to define requirements for a numerical proof of the watertightness. The corresponding proof of limitation of crack width from most standards serves therefore only to insure the durability.

Code/Country/ Year	Water-tightness	Permeability of Concrete	Minimum reinforcement	Crackwidth-Control	Tensile stresses of Concrete
MC - 90/ - / 1990	No	Yes	Yes	Yes	No
EC - 2 / - / 1989	No	Yes	Yes	Yes	No
DIN 1045/D/ 1988	No	Yes	Yes	Yes	No
SIA 162/CH/ 1989	Yes	Yes	Yes	Yes	No
CP-110/GB/ 1972	No	Yes	Yes	Yes	Yes
B 4200/A/ 1979	No	Yes	No	No	No
ACI 318/USA/1983	No	Yes	Yes	Yes	No

Tab. 1 Comparison of standards

REFERENCES

1. SPRINGENSCHMIDT R., BREITENBÜCHER R:, Investigation of a thermal cracking frame. Material and Structures, No. 23/1990.
2. KRAUS D., Wasserundurchlässiger Beton. VBI-Kolloquium, March 1990.
3. DAFSTB, Erläuterungen zu DIN 1045 - Beton und Stahlbeton, Bemessung und Ausführung, Ausgabe Juli 1988. DAfStb-Heft 400, Januar 1989.
4. DBV, DBV-Merkblatt: Wasserundurchlässige Baukörper aus Beton, Fassung August 1989
5. TROST H., CORDES H., Zur Wasserundurchlässigkeit von Stahlbetonbauteilen mit Trennrissen. Beton- und Stahlbetonbau 84/1989, Heft 3, Seite 60-63.
6. DBV, DBV-Merkblatt: Begrenzung der Rißbildung im Stahlbeton- und Spannbetonbau, Fassung April 1986.
7. WICKE M., Performance Requirements, IABSE-Colloquium "Structural Concrete", April 1990.