Zeitschrift: IABSE reports = Rapports AIPC = IVBH Berichte

Band: 62 (1991)

Rubrik: Theme 3: Implementation in codes of practice

Nutzungsbedingungen

Die ETH-Bibliothek ist die Anbieterin der digitalisierten Zeitschriften auf E-Periodica. Sie besitzt keine Urheberrechte an den Zeitschriften und ist nicht verantwortlich für deren Inhalte. Die Rechte liegen in der Regel bei den Herausgebern beziehungsweise den externen Rechteinhabern. Das Veröffentlichen von Bildern in Print- und Online-Publikationen sowie auf Social Media-Kanälen oder Webseiten ist nur mit vorheriger Genehmigung der Rechteinhaber erlaubt. Mehr erfahren

Conditions d'utilisation

L'ETH Library est le fournisseur des revues numérisées. Elle ne détient aucun droit d'auteur sur les revues et n'est pas responsable de leur contenu. En règle générale, les droits sont détenus par les éditeurs ou les détenteurs de droits externes. La reproduction d'images dans des publications imprimées ou en ligne ainsi que sur des canaux de médias sociaux ou des sites web n'est autorisée qu'avec l'accord préalable des détenteurs des droits. En savoir plus

Terms of use

The ETH Library is the provider of the digitised journals. It does not own any copyrights to the journals and is not responsible for their content. The rights usually lie with the publishers or the external rights holders. Publishing images in print and online publications, as well as on social media channels or websites, is only permitted with the prior consent of the rights holders. Find out more

Download PDF: 30.11.2025

ETH-Bibliothek Zürich, E-Periodica, https://www.e-periodica.ch

Theme 3

Implementation in Codes of Practice

Leere Seite
Blank page
Page vide

Impact of Codes in Practice

Impact des normes dans la pratique

Auswirkungen der Normen auf den Entwurf

René WALTHER
Professor
Swiss. Fed. Inst. of Technol.
Lausanne, Switzerland

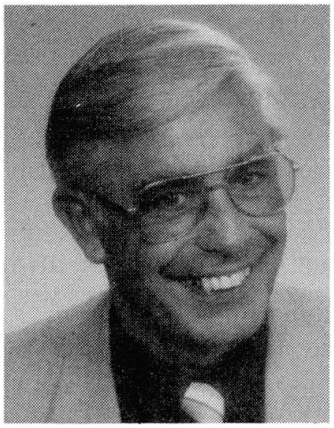

René Walther, born 1928 in Basel, Switzerland, is partner in the firm Walther, Mory, Maier Consulting Engineers in Basel, Professor of concrete structures at the Swiss Federal Institute of Technology in Lausanne, and since 1988 has also served as President of the FIP (Fédération Internationale de la Précontrainte).

SUMMARY

A symptom of misguided professional orientation is the inclusion of many details in our codes that fail to embrace a higher scientific standard. Codes should delineate basic principles and goals while leaving to the ingenuity and experience of the engineer the conceptualization and realization of the task. The distinction of serviceability and ultimate limit states, is one such basic design principle that can be further applied in conjunction with non-linear methods to arrive at more progressive monolithic construction. A uniform approach to structural concrete could certainly help to enhance the aim of good conceptual and aesthetical design.

RÉSUMÉ

La difficulté d'orientation des ingénieurs est accrue par la complexité et l'aspect détaillé de nos normes, qui ne permettent pas une approche scientifique de bon niveau. Les réglements devraient décrire les principes et les objectifs de base, laissant à l'ingénieur son génie et son expérience pour assurer la conception et la réalisation de l'objet. La distinction entre l'état de service et l'état limite ultime est un de ces principes de base qui, appliqué en conjonction avec des méthodes non linéaires, peut construire à la construction d'éléments monolithiques sans joints de dilatation. Une approche unique et uniforme du béton structural pourrait certainement favoriser le dimensionnement, tant pour un bonne conception que pour un aspect esthétique séduisant.

ZUSAMMENFASSUNG

Ausdruck einer unseligen Entwicklung im Ingenieurwesen ist, dass unsere Normenwerke immer komplexer und undurchsichtiger werden, Detailfragen regeln wollen und dabei ihr wissenschaftlicher Wert in keiner Weise erhöht wird. Normen sollten grundsätzliche Fragen regeln, ohne die Kreativität und den Pioniergeist des projektierenden und des ausführenden Ingenieurs einzuengen. Die Unterscheidung von Gebrauchstauglichkeit und Tragfähigkeit eines Bauwerks, welche in den meisten modernen Normen Anwendung findet, ist eines der Prinzipien, das verbunden mit nichtlinearen Berechnungsmethoden zu modernen monolithischen Konstruktionen führt. Eine einheitliche Betrachtungsweise des Stahlbetonbaus sollte zu guten Entwürfen und ästhetisch überzeugenden Bauwerken führen.

1. GENERAL REMARKS

The making of codes inevitably implies the difficult task of finding a fair compromise between the noble aim of stating basic principles and the trivial necessity of specifying rules of good practice. In general discussions most everybody agrees that codes should not merely be manuals for technical personnel with little creative imagination, but should on the contrary convey the basic state of the art in a concise, yet general and flexible way.

However, when it comes to drafting codes many a researcher feels the irresistible urge to include his latest findings or professors their favorite topics while others consider it indispensable that codes go into minute details which are deemed necessary for competitive bidding and for reasons of legal implications. This tendency inevitably leads to ever more voluminous treatises and worse yet to a subdivision in many separate tomes for plain, partially prestressed and fully prestressed reinforced concrete, as well as for buildings, highway and railroad bridges, etc. One is tempted to paraphrase the famous saying of the British engineer Tredgold (1829) that the quality of structures is inversely proportional to the size of the codes needed for its realization 1).

Codes are indeed more than only helpful or necessary tools; to a certain extent they reflect an image of the whole profession, and this unfortunately is not anymore the best as far as civil engineering is concerned. We have come a long way since the times when masterbuilders were architects, engineers and artisans in one person, the great ones often speaking as equals to their rulers. Nowadays at inaugurations of or in publications about important bridges or structures the engineer is hardly ever mentioned, regardless of the extent of his contribution. Nothing shows the decline of the prestige of engineers more clearly than the fact that the task of designing the last bridge over the river Seine in Paris, and incidentally also one in Basel, was recently given to architects rather than to experienced bridge engineers, leading however, as was expected, to rather disappointing results.

It would certainly be a gross exaggeration to hold the excessive preoccupation of engineers with codes responsible for this unsatisfactory situation, but it is nevertheless a symptom of misguided professional orientation. If we continue to conceive our codes as comprehensive manuals, which must also be intelligible for the so-called average engineer or even draftsman, then it is a small wonder that we are often only called upon to calculate and to dimension structures conceived by others. And even this task can nowadays be performed by computers with the latest cry of implementing all the pertinent clauses of codes directly into computerized design programs.

If we wish to improve the reputation of our profession again, then we must have the courage to pursue it in a more progressive way and to place more emphasis on innovative conceptual design rather than on mere dimensioning of structures according to codes. One little step in the right direction would certainly be to raise the scientific standard of our codes, specifying essentially only basic principles and goals while leaving it to the creativity and experience of the engineers to translate this into innovative conceptual design. A concise unified code for structural concrete could undoubtedly be helpful in this respect.

2. SAFETY AND SERVICEABILITY

There is nowadays a nearly universal consensus that for modern conceptual design the two criteria, safety and serviceability, should be checked separately. The first is often referred to as ultimate-limit-state check (ULS), while the second is termed as serviceability-limit-state check (SLS). One of the drawbacks of the otherwise simple and straightforward concept of allowable stresses was that it tried to combine the two criteria in one, with neither of them being met in a really satisfactory manner.

However, even though the principle of two separate checks is stipulated in the introduction of most modern codes, this noble objective is often violated in subsequent chapters specifying the details of these verifications.

1) Original version: the stability of a building is inversely proportional to the science of the builder.

More often than not clauses concerning action effect to be taken into account for the ULS-check include factors for creep, shrinkage, relaxation, temperature effects, hyperstatic forces of prestress, etc. which at ultimate have in general no or, in exceptional cases, only limited influence.

Yet, it should be clearly recognized that the potential advantage of the new design philosophy lies in the clear distinction between safety and serviceability requirement. The fact that the phenomena mentioned above are in general relevant for serviceability considerations only can favorably be exploited in modern conceptual design. A great many structures could be built monolithically, that is without expansion joints or mechanical bearing devices, if appropriate measures are taken to ensure a satisfactory behavior at service loads and if the security check is then performed with non-linear methods such as the theory of plasticity which take duly into account that the effects of these phenomena have the tendency to disappear as the ultimate load is approached.

As an example we cite the 1 km long Felsenau Bridge built about 20 years ago in Berne, Switzerland (Fig. 1).

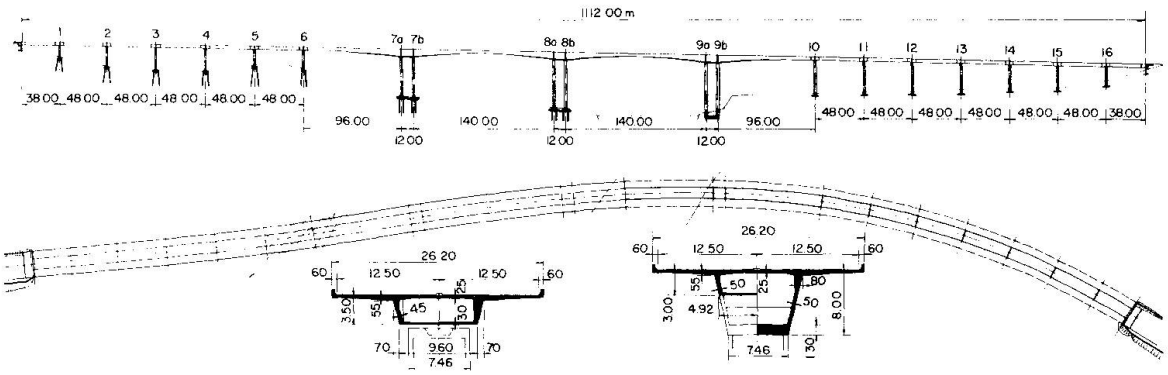

Fig. 1. Felsenau Bridge, Berne, Switzerland.

According to the codes in use at that time it was necessary to fit the piles of the side spans with gliding bearings. Nowadays one would probably prefer to connect these piles monolithically with the superstructure which would certainly be more economical and preferable from the point of view of maintenance.

Another example is the large storage building of the IKEA near Basel, Switzerland (Fig. 2).

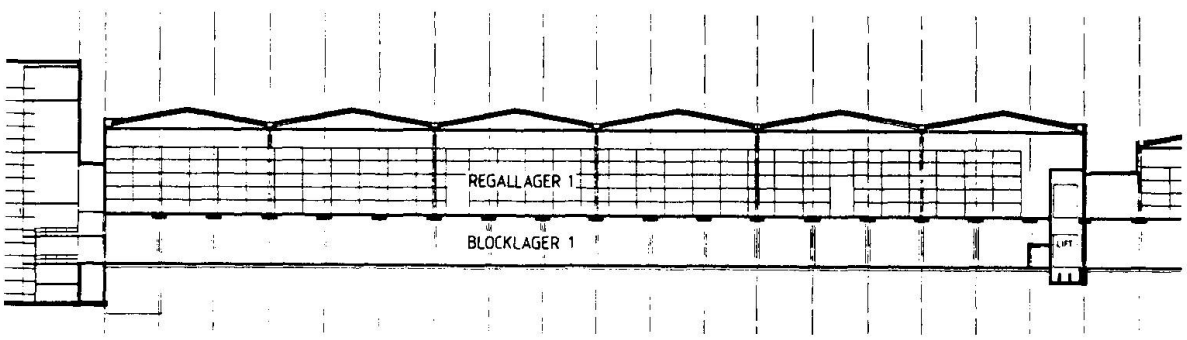

Fig. 2. IKEA Storage Building

In spite of the large size of this building, measuring 180 m in length and 85 m in width, the prestressed cast in-situ slabs do not have any expansion joints and were monolithically connected to the columns. This was only possible by using modern non-linear methods for the design and by profiting from the liberal spirit of the Swiss codes, which grant the engineer much freedom of action as long as he can prove the feasibility of his concept by scientifically sound methods and is willing to take the full responsibility of his endeavours.

By these examples it was tried to show that the separation of security and serviceability requirements is much more that abstract fancies of some theoretically inclined scientists. On the contrary, it enables qualified engineers to conceive their structures in a more appropriate and modern way.

As far as the so-called serviceability requirements are concerned, it has also to be admitted that the roots of many of them stem in reality from durability considerations, which in turn are related to safety.

One can rightly question if, for reasons of conceptual clarity, it might be better to treat durability separately as well. However, we should not erect somewhat scientific ivory towers which are of little help in practice. This holds also true for other topics in this field such as reliability-based design or probabilistic methods concerning safety and considerations of the lifetime of structures.

The essence of all these valuable approaches could and should be implemented in a concise form in the two major categories, one dealing broadly with structural safety and the other with the actual behavior of the structure during its anticipated lifetime, which may well, even if somewhat unprecisely, be termed as serviceability.

3. PRESTRESSING

Since the main objective of this Symposium is to deliberate over the benefits of a uniform approach to structural concrete it is indeed superfluous to discuss at length the futility of artificially divorcing reinforced from prestressed concrete of any degree. This only prevents many engineers from taking full advantage of the most appropriate means of improving the serviceability and durability of their structures by simply providing them with even moderate prestress, especially in building construction, where this procedure is far too scarcely used. Furthermore, most prestressed structures also comprise conventionally reinforced elements. Thus, it would seem rather nonsensical to have to refer to two different codes for one and the same structure.

On the other hand, there exist some diverging opinions as to how prestressing should be dealt with at service and ultimate level and, in particular, if the prestress should be considered as an internal or an external action effect.

From a purely theoretical point of view there can be no doubt that at service loads prestressing is definitely an internal action, which creates a state of self-equilibrating internal stresses (Fig. 3).

However, it can be expedient in education as well as for practical design to take advantage of the static equivalence of the prestressing force itself and its reaction effects on the concrete as is, for example, widely done with the so-called load balancing method. As long as one knows exactly what he is doing there is certainly nothing wrong with using such methods. However, they become rather cumbersome for cases with multiple and overlapping prestressing tendons, in particular if one forgets that prestressing cables produce not only deviation forces, but also sometimes eccentric anchorage forces. At any rate such considerations should not be implemented in codes, the mission of which is to specify principles but not to prescribe methods.

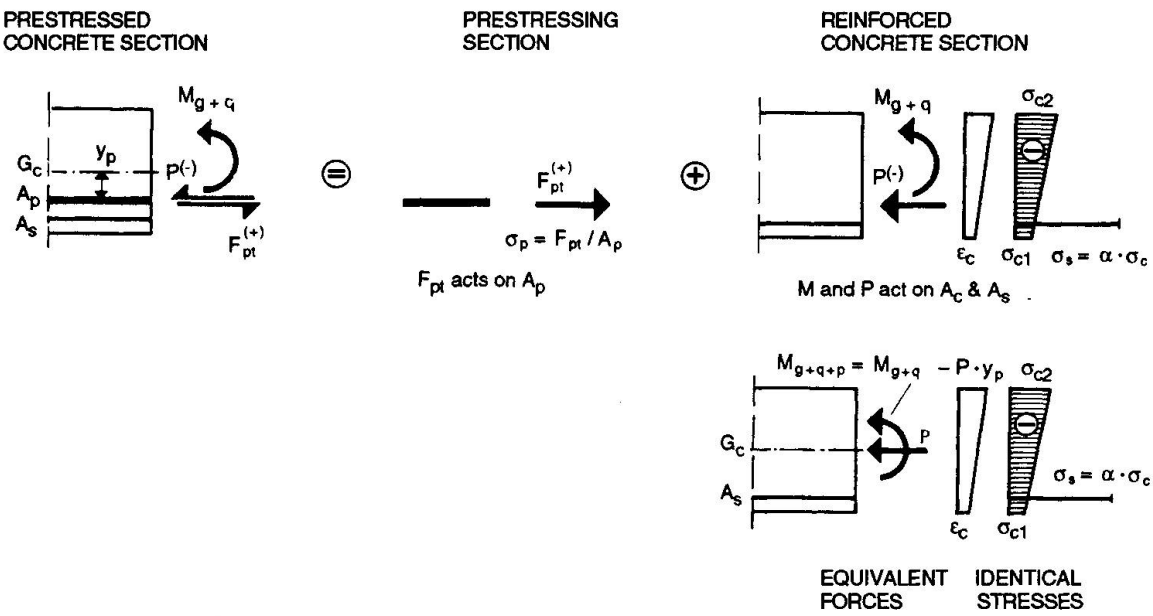

Fig. 3. Internal stresses and forces due to prestress

The question becomes considerably more involved when it comes to the ULS-check. Most of the codes today stipulate formulae of the type:

$$M_u > \gamma_Q M_Q + \gamma_p M_p^h$$

where:

M_u	ultimate moment at the section considered
$\gamma_Q M_Q$	moment due to load effects increased by the load factor (1.6-1.9)
M_p^h	hyperstatical (secondary) moment of prestress
γ_p	load factor of M_p^h (varying between 0.8 and 1.3 depending on the code considered).

Again it has to be stressed that the hyperstatical moments pertain to the elastic state and can no longer be clearly defined at the ultimate limit state due to the considerably moment redistribution which will have taken place. While the formula just mentioned may yield satisfactory results in most cases, there are others (inverted T-beams for example) Fig. 4, where the shifting of the moment closure line stipulated by the term $\gamma_p M_p^h$ goes in the wrong direction. The resulting sectional safety factors γ, calculated backwards by assuming $\gamma_p = 1$ (first line in the table of figure 4) and $\gamma_p = 1{,}3$ (second line) clearly show the inconsistency of such approaches. Furthermore it is sometimes recommended to take $\gamma_p = 0.8$ if M_p acts favourably and $\gamma_p = 1.2$ in the unfavourable case, which means that the global system would not even satisfy the equilibrium conditions. No such ambiguities are met if one performs the ULS check by the statical method of the theory of plasticity, which clearly assesses the effective distribution of internal forces at ultimate load, and which leads to an identical global safety for a T and an inverted T-beam (last line in the table of figure 4) as it should correctly be.

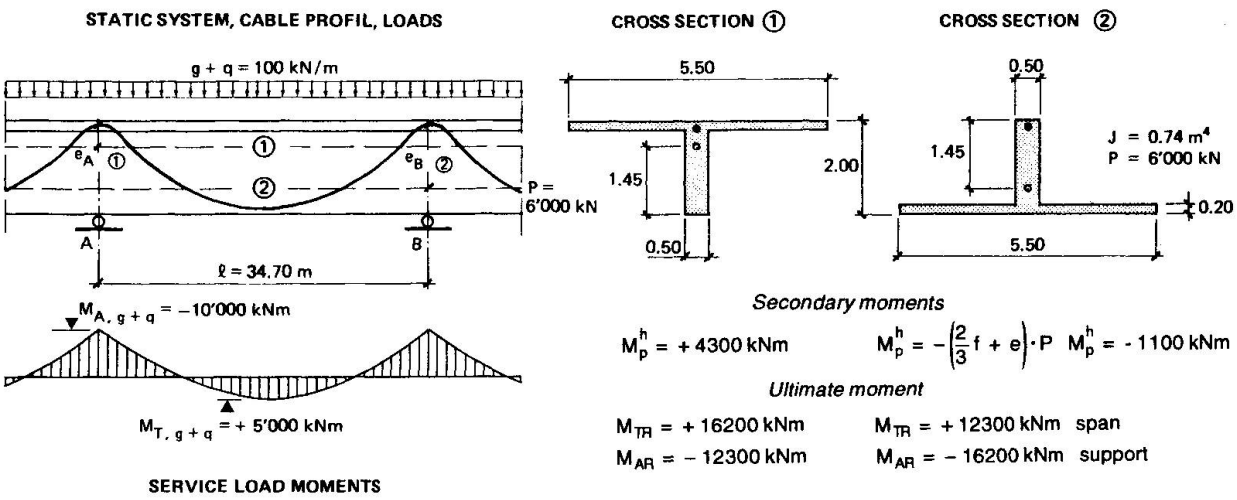

		① SPAN	① SUPPORT	② SPAN	② SUPPORT
$\gamma_p = 1.0$	$\gamma = \frac{M_R - M_p^h}{M_{g+q}}$	1.66	2.33	1.51	2.69
$\gamma_p = 1.3$	$\gamma = \frac{M_R - 1.3\,M_p^h}{M_{g+q}}$	1.79	2.12	1.48	2.75
THEORY OF PLASTICITY	$\gamma = \frac{M_{TR} - M_{AR}}{M_{T,g+q} - M_{A,g+q}}$	1.90		1.90	
		GLOBAL SYSTEM		GLOBAL SYSTEM	

Fig. 4.

4. DETAILING

Nowhere does the discrepancy between noble goals and practical necessities become more apparent than in the case of detailing. While a great many rules of proper detailing can indeed be derived from basic principles, there are others which result from long experimental and practical experience not always readily available to all engineers. Furthermore, they constitute sometimes a quality requirement which the owner may wish to impose. Concrete cover, bending radii, anchorage lengths and alike are striking examples of that category.

There is certainly nothing wrong if such details are specified in the codes. On the contrary, it frees the project engineer from dealing with rather tedious, albeit important matters. However, these rules should not be imposed as rigid commandments carved in stone, but rather be regarded as valuable yet flexible recommendations for everyday routine work. Here, as for codes in general, the overriding maxim must be that he who makes decisions has to assume the full responsibility for their consequences.

5. LEGAL IMPLICATIONS

It is often argued that codes must be comprehensive and go into considerable details in order to put potential bidders on the same contractual and technological footing, especially in view of the ever growing international competition. This argument can certainly not be taken lightly, but it should also not be overestimated.

Above all it must be recognized that the economical aspects of modern building process depend much more on skillful conceptual design and the adroit choice of innovative, time-saving construction procedures than on provisions of codes, which influence mostly only secondary matters of material consumption. Furthermore, the questionable practice of blindly awarding the contract to the lowest bidder is fortunately slowly fading away, since it dawned to many owners that the initially cheapest solution is often not the most profitable one in a long run, not to speak of esthetical aspects which should undoubtedly occupy a more predominant place in our society. Aside from the topic treated here, we have all to strive to grant an ever greater importance to quality and esthetics of our structures.

Yet we have to concede that some code provisions may have considerable effects also on the economy of engineering structures. Take for example construction by incremental launching; the potential economy of this procedure depends very much on whether one requires full prestress during launching or whether some concrete tension stresses of say 3 N/mm^2 are deemed acceptable, which reduces the prestressing forces needed during erection only quite significantly. Thus the question of whether or not and where such and similar provisions should be introduced, has to be pondered carefully. In our opinion certainly not in codes, the task of which must be to promulgate the objectives, but not to prescribe the methods to achieve them. Such and similar provisions should - if necessary - be included in the tender documents of a given project all by leaving the option for eventual alternatives open, if the designer and contractor are willing and capable to guarantee the required quality and safety criteria.

While for reasons of fair competition it is often unavoidable to go into considerable details, one must not believe that the quality of the structure to be built depends on the size or completeness of the specifications. In fact, a sly contractor can more easily find and exploit loopholes in prescriptions of minute details than violate general but rigorous requirements of quality and safety.

There can be no doubt that the liberal attitude towards codes and tendering advocated here requires both courage and competence from all parties involved.

Leere Seite
Blank page
Page vide

A Conceptual Codification of Codes

Codification conceptuelle des normes

Konzeptioneller Aufbau von Normen

T.P. TASSIOS
Prof. Dr.
Nat. Tech. Univ.
Athens, Greece

T.P. Tassios, born 1930, is a civil engineer, working in the field of bridge design and of redesign of reinforced concrete and masonry structures. His research work is on basic modelling under monotonic and cyclic actions. He has served as President of some international Engineering Associations, such as CEB, RILEM and others.

SUMMARY

After a short reminder of the anatomy of the design process, the scope and means of a design-code are reviewed. Subsequently, several basic features of a modern code are enumerated, together with indications of some contradictions; a proposal is made to overcome them. The lecture ends with a further response to some invited reports to the Colloquium.

RÉSUMÉ

Le processus général du dimensionnement est rappelé succintement; la nécessité et les buts d'une norme sont passés en revue, puis, plusieurs caractéristiques fondamentales d'une règlementation moderne sont énumérées et ceci conjointement à quelques situations contradictoires: une proposition est faite afin d'y remédier. L'article s'achève par quelques réponses à des contributions invitées au Colloque lui-même.

ZUSAMMENFASSUNG

Nach einer kurzen Betrachtung der Gliederung des Entwurfsprozesses wird ein Überblick über die Inhalte und die Regelarten von Bemessungsnormen gegeben. Dann werden verschiedene grundlegende Charakteristiken einer modernen Norm aufgezählt; dabei werden auch einige Widersprüche angedeutet, und ein Vorschlag zu ihrer Verminderung unterbreitet. Abschliessend werden weitere Antworten auf einige eingeladene Referate zum Kolloquium gegeben.

1. THE DESIGN PROCESS

a) It is worth, perhaps, to remind that **design** is a mental process, through which knowledge is transformated into production-drawings and specifications. Thus, as an interface between a set of pre-existing knowledge and a set of yet non-existing productive results, design is potentially a clearly **creative** endeavour.

b) To its end, design is based on **given** data, such as:
- Performance requirements of structural, functional, aesthetic and environmental nature.
- Acceptable probability of failure.
- Life-expectancy (indirectly given though)
- Assumptions on (future) level of quality assurance of construction, use and maintenance.

c) Design may make use of several **tools**, such as:
- Experience from similar situations
- Rules for conceptual design; intuitive procedures may intervene in original cases.
- Engineering models regarding local or global behaviour.
- Deemed to satisfy practical rules
- Numerical analysis
- (Eventually) Testing

How such a highly complex and frequently creative process may be assisted by **"Codes"**? And how the eventual risks of such a socially important activity can be faced?

2. CODES: SCOPES AND MEANS

a) These questions should be considered when formulating the **scope** of Codes:
- Public safety issue: Human lifes and enormous economical interests are at risk because of eventually defective designs. And, indeed, almost 50% of failures of any nature are due to incomplete or erroneous design. It is therefore understandable that design principles and basic design methods should be somehow "codified" in order to cover the broader interest of society. Such an inevitable l e g a l aspect has to be clearly understood by our profession.

- Designer's assistance: It has to be recognised that the entire design-industry is not in hands of the few very talented, experienced and creative Engineers. Yet, even those Engineers had passed a period when they were somehow q u i d e d. In this connection, a Code is but a substitute of the live guidance from more experienced persons; but an "un-personalised" guidance, in order to avoid strong non-scrutinised individual views. Thus, from this point of view, a Code should not limit itself in saying only "what not to do" ([1], p. 3).

- Check locus: An articulated ensemble of mutually supported design principles and compatible models, may also serve to identify lacunae, to inspire further research and to stimulate better design philosophies. From this point of view, Code-making may encourage further creative work.

b) Through which **processes** professional community may establish a Code?

- Synthesis: A long and patient process has to be established by a (as broad as possible) professional group, in order to select m a t u r e and well established knowledge ready for "codification". An optimum size of such a Group is sought: Relatively restricted ones are bound to disproportionate personal influences, whereas extremely large organisations may discourage much innovation.

- Scrutiny: A collective re-examination and consensus is needed in selecting available knowledge; and this is a fundamental process inspite of its delicate aspects.

- Calibration: Last but not least, a marriage with the past is to be contracted, so that continuity is secured; trial calculations and feeding back are a sine qua non step in this connection.

But a Code is a "too good to be true" business, needing quite a few further qualifications (yet, not without some degree of contradictoriness).

3. BASIC FEATURES OF A CODE

What follows may be considered as a wishful thinking; however, there is a clear tendency of actual Code-making towards these ideas. After all, it is through experience that such a categorisation of desired features was achieved.

3.1. Holistic design

Due to an understandable oversimplification, design is normally meant to be synonymous to structural analysis and dimensioning against l o a d s. Concurrent external actions, such as imposed deformations and physical-chemical actions, were underestimated or merely covered by means of unconnected and non-trasparent construction-rules [2]. Nowadays, a more holistic attitude (see [3] § 3.6) is taken; building materials and elements show a considerably different response to the synergetic effects of mechanical, physical and chemical actions. Consequently, modern Codes do contain broader guidance for a life-time design.

3.2. Conceptual comprehensiveness

Despite the fragmentaristic approach of just dimensioning some cross-sections, it is now made clear that a global **conceptual design** (which always precedes) should be appropriately backed by the Code. To this end, identification of structural systems, morphological rules and "preliminary dimensioning" (see [1], § 3), are subjects to be also codified. Thus, a sound s y s t e m securing "the efficient flow of forces throughout the structure" ([3] §1.2) will be submitted to the next step of design: "Refined check", to use Schlaich's terminology, will follow and will be backed by subsequent contents of the Code. But we should make clear that an ideal Code needs to elaborate on **two** distinctive levels of sophis-

tication, correspondingly. However, this dual character of design is mainly apparent in original or outstanding structures; in designing everyday structures, previous experience and functional requirements lead directly to the preliminary shaping of the structure before its detailed check.

3.3. Rationality

It is recognised that a modern Code should not be a compilation of more or less authoritarian rules to be blindly followed by the designer. Instead, the following rational characteristics seem to be of paramount importance.

a) Performance oriented formulation is needed; thus, we first describe the desired behaviour. Any criteria to satisfy these requirements may very well change in time, whereas the required performances remain.

b) Physically sound models are needed now more than ever. This is the only way to achieve:

- compatibility within the Code (needed not only for elegance, but above all in order to avoid contradictions and gross errors)
- uniform applicability across apparently different "materials" (reinforced, prestressed and composite, as rightly pointed out in [3], §1.2).

c) Pluralism of design-means should be offered, provided that the conditions of their applicability will be clearly stated. Thus, a Code should be formulated in such a way that e.g. all methods for analysis may be usable, FEM included, following the same format and reliability scheme.

d) Uncertainties-proof: Rationality i.a. means "honesty" on the validity-limits of our working methods. Thus, all possible uncertainties of input data or of modelling should be appropriately counter-balanced by the Code, by means other than just numerical safety-factors. To this purpose, geometrical constrains, construction provisions, and/or limitations of extreme values of basic variables should be used instead. Minimal ductility provisions belong to this category of honesty-measures.

3.4. Transparency

Every design clause should be clearly connected to its **purpose**: Whenever a criterion is given (be it a model, a rule or a minimal measure), the scope of its use should be explicitly stated in connection with the satisfaction of a previously formulated requirement. Listing unconnected or unexplained rules, is a bad code-policy.

On the other hand, the limits of validity of each criterion should a l w a y s be given.

3.5. Pragmatism

In addition to the state-of-the-Art, a Code equally reflects the state-of-**capacities**: Current educational level, available computing facilities and broader technological means in construction industry, are also taken into account along the Code, and influence its degree of sophistication. Thus, it is absolutely legitimate that local traditions, educational habits and industrial particularities may differentiate a Code from region to region of the world. That there is a possibility and indeed a tendency towards a gradual harmonisation across the borders, this is another (wishful) story.

3.6. Logical format

a) Each section of the Code should be structured in a logical sequence, from the more general to the more specific ([4], p. 112).

b) First, the required behaviour of the structure (or of a component) is formulated and, subsequently, the means are given through which this behaviour may be achieved in design. In this connection, the following explanations may be needed:

- A structural **requirement** is meant to be a description of a desired behaviour of the structure, of a structural component or of a critical region of such a component. Thus, a requirement should not be understood as an "order" to the designer. The designer, having in mind the desired behaviour, will make use of the appropriate means in order to satisfy these requirements.

- And in doing so, he will be assisted by the Code offering corresponding **design criteria**; their application is meant to secure the satisfaction of the respective requirement, unless the designer wishes to use other means to the same purpose (but in such a case, he will take the responsibility to prove that the requirements are indeed satisfied).

  A "criterion" might be
  - the application of an appropriate engineering model
  - the use of a set of deemed-to-satisfy practical rules
  - the application of just some minimal measures
  - or a combination of them.

  Limits of validity of each criterion are also given.

3.7. Provisions on post-design issues

Codes should reconfirm the right of the designer to be informed on the following basic issues:

- What is the level of expected **quality** assurance scheme that the owner is willing to secure during construction?
- What is the **maintenance** policy expected during the use of the structure?

Several important decisions at the stage of conceptual design will

depend on that kind of information: Sophistication and complexity of the technical solutions to be adopted, extend of durability measures to be taken (visitability of critical areas included), and the like.

I maintain that these are issues of fundamental technical and economical importance (with consequences on safety as well), which should be somehow institutionalised via appropriate provisions of the Code.

3.8. Efficiency

The final usefulness of a Code will depend on a sort of optimisation between several desired aspects. An isolated consideration of each of those aspects may easily destroy the equilibrium needed; Table 1 shows such an interplay: There are few of the desired characteristics of a Code which are not mutually contradictory.

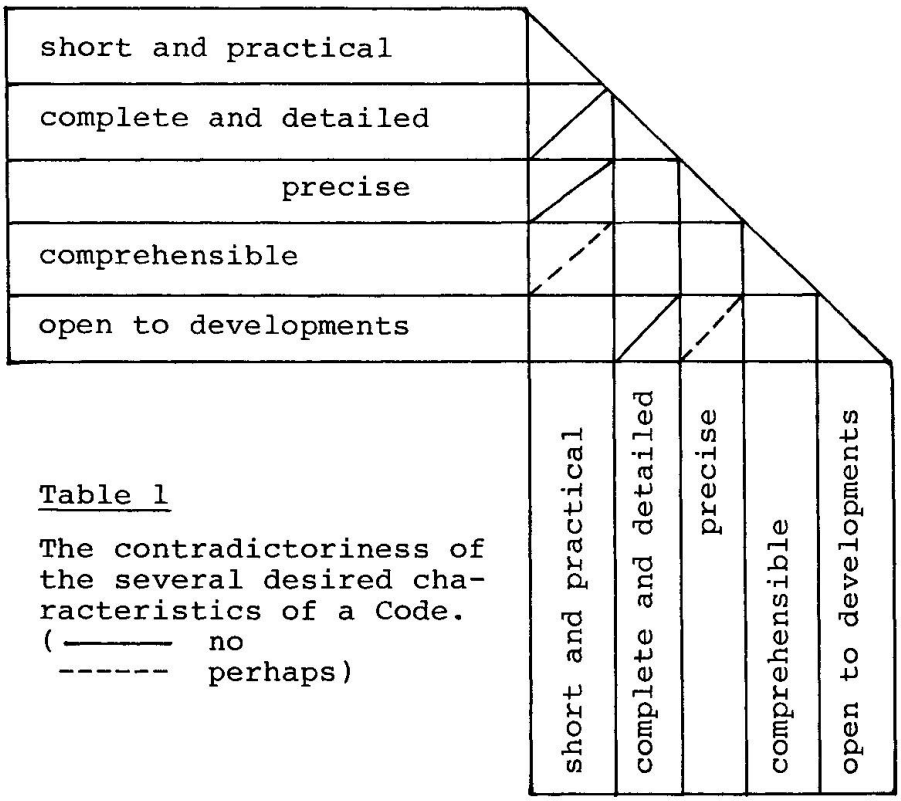

Table 1

The contradictoriness of the several desired characteristics of a Code.
(——— no
------ perhaps)

There is only one way out of this conflict: Efficiency is gained by a **set** of regulatory documents rather than by just one. A Master Code, at higher level of sophistication, is needed, encompassing all types of structures and all design situations; separate documents, emanating from the central document but applicable only to well specified cases, will be shorter, and more practical.

The Master Code will be much more rational, model-based and open to future developments. The other regulatory documents will mainly be based on "rules" but in doubtful cases they may be occasionally "abandoned" in favour of the Master Code; in all cases, the same

reliability is secured thanks to the rationality of the system. Last but not least, these sub-codes are to be more frequently modified in the course of time.

Much of the uneasiness we actually feel in the field of Codes will be remedied if such an approach is adopted. Otherwise, the "optimum" will be only a matter of personal taste...

4. COMMENTS

I thought I should have first elaborated on the broader concept of Codes before trying to submit some comments on the actual trends of Code-making in the field of Structural Concrete; here again, going from the general to the specific, offers several logical advantages.

4.1. The CEB-FIP Model Code 1990

Now that this vast collective endeavour is over (after an international effort of more that six years), I think I can be more objective about what we have achieved and what we have failed to do.

a) Among other things, the main innovative aspects of this document are the following:

- Structural concrete is above all "concrete", the basic material which governs the behaviour of the ensemble (see Fig. 1). It is hard to believe that only 6 pages were devoted to concrete in MC78. Now, a complete set of quantitative scrutinised knowledge on the mechanical and physical behaviour of concrete is included in 50 pages.

- Fundamental models of R.C. are described in the Code, both as an input for the subsequent chapters and as a guidance for advanced design beyond the Code. (It suffices to see how rudimentary are sometimes the input R.C. models used in **some** commercial computer-packages).

- Provisions are included for every type of analysis (linear, non-linear, plastic).

- Consistency of models for dimensioning is achieved to a certain extent: Critical regions (not cross-sections) are considered, with fully interactive M, N, V. Discontinuity regions or entire "plates" are treated more rationally.

- Prestressing is mainly handled as multifold e x t e r n a l forces.

- A complete and operational chapter on fatigue-design is included.

- Crack-width considerations are harmonised for both reinforced and prestressed concrete, whereas durability considerations are mostly uncoupled form crack-width values.

- An operational and explanatory chapter is provided covering the

design for durability.

- Design by testing is rationally covered.
- A modernised chapter on practical construction is included.

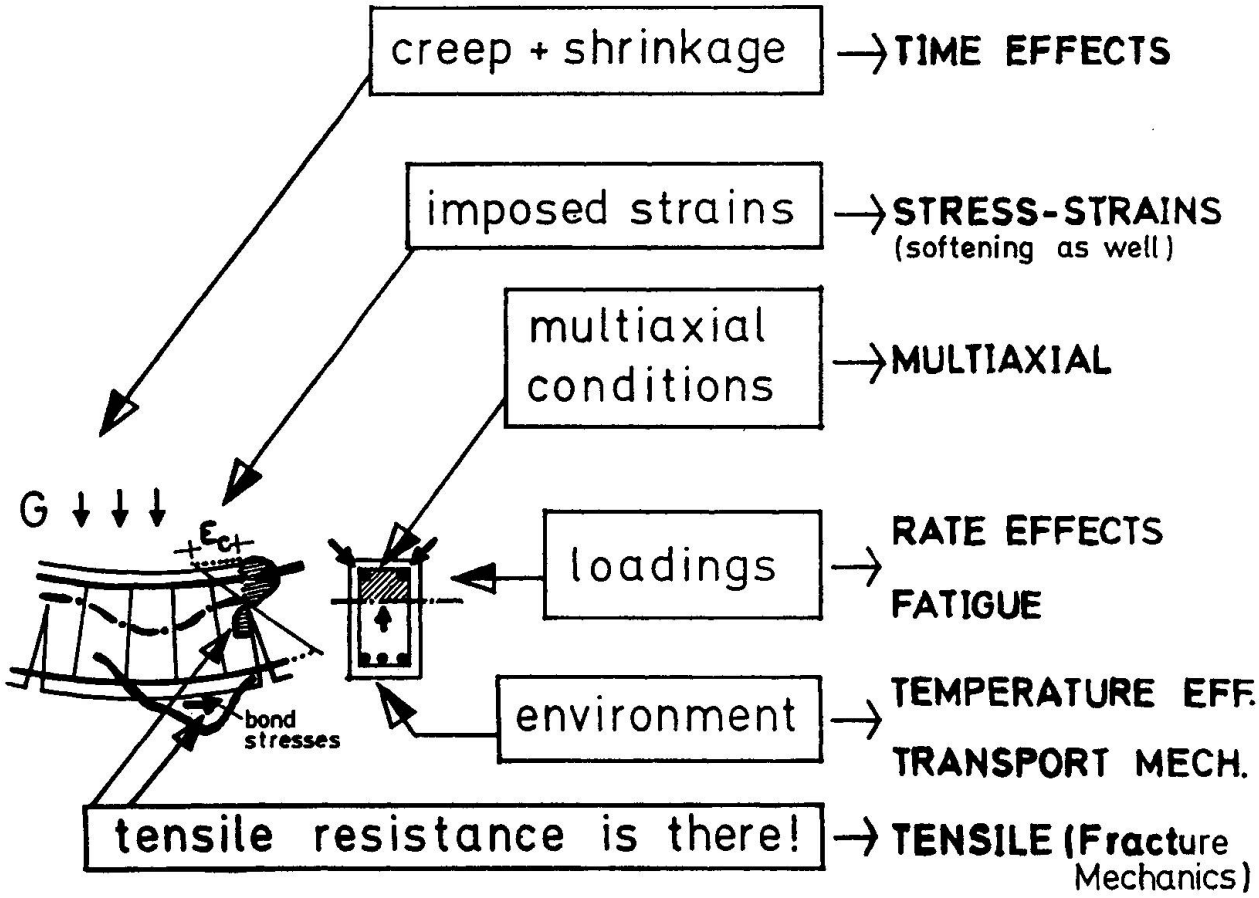

Fig. 1: Structural concrete is above all "concrete"; its properties govern everything and they must be described in details.

b) However, for the actual state of the art or for the actual state of possible consensus in an international document, I think we were less successful in the following areas:

- The design of plain (or slightly reinforced) concrete is far from being as rational and reliable as for the other types of Structural Concrete.

- Even the code-handling of prestressing is not yet as general and complete as it should be.

- The increasing use of truss-models across a multicracked medium, leaves some open problems of rationality and non-equivokalness.

- The reliability format of the Code is well established and calibrated for the most common case of the linear analysis of monodimensional building elements. However, when non-linear analysis is used and when (e.g. in "plate" elements) the concept of the critical region is not easily applicable, the problem seems unsettled: When and how mean values and/or factored characteristic values of material properties will be considered in the step by step process?

- The consequences of repeated (or cyclic) loading on i) the redistribution of action-effects and ii) the eventual strength degradation, are not covered.

Nevertheless, it may be said that the new CEB-FIP Model Code 90 goes along the correct lines of modern code-making, and it may be profitably completed and corrected during the few years to come.

4.2. Joint efforts

a) In view of this state of the art of code-making in the field of Structural Concrete, what is to be done in the near future?

- First, we should continue discussing the philosophy of Modelling and Codes, the way this very Colloquium of IABSE has shown.

- Second, in the opinion of this writer, the five MC90 main inadequacies mentioned in § 4.1.b, should be tackled in priority; CEB has a direct interest to instruct its newly structured Commissions to elaborate on them, whereas IABSE could possibly organise relevant Workshops on some of these major subjects.

- Third, we should be pragmatic, trying to understand the necessity for a patient development of the ideas of several schools of thought, up to a critical moment when:
  (i) the validity of some ideas has been broadly accepted in the professional community, and
  (ii) the operationality of the relevant methods in all design aspects has been proved.

  Progress by its nature is a slow (and sometimes zig-zag) process.

b) Closing this lecture, and following the instructions of the Organisers, I wish to add further response to some of the very fruitful ideas offered in the Introductory Reports of this Colloquium; in the previous paragraphs, as well as in [5], I had already the opportunity to make some (mostly positive) comments.

- In fact ([3], §3.3) we need a unique ductility criterion for all cases of Structural Concrete; models predicting available "θ_{pl}" are the best way in doing so. A similar approach has been implemented in [6] via a required curvature ductility factor, valid

for all structural cases.

True, "the designer should give priority to making sure that all load cases, all restraint cases, all equilibrium checks, and all possible instabilities are considered" ([3], §4.2). But how is this possible without precise analysis? Happily enough, our actual calculation tools are not based on "wild guesses".

- Some further explanations are needed on what is really new in the proposals ([3], §4.3) related to linear or non-linear FEA.

- The compressive fields approach or the strut and tie models have their own merits for what they offer for ULS checks under well specified conditions; they are not obliged to cover topics such as crack control or durability ([3], §4.4)! Even Physics was not that ambitious to unify all fields of forces. What we want in design is consistency of **appropriate** models, not uniqueness.

- I fully subscribe to the wish of exploring a consistent approach in selecting appropriate structural systems, together with respective educational aids ([3], §5.2).

- I am not sure that the most efficient and elegant way of doing things is that one International Association should prepare a "model for other organisations" ([3], § 6). The most pragmatic and indeed productive way is to come up with a joint effort, like for instance the common design principles prepared by CEB and ECCS (1985).

- I have very much appreciated at least two of the views formulated in [7], namely that "design should be made less sensitive" to time effects, and that we need one approach for crack spacing, crack width, stiffness and deflections.

- I welcome the view that ([1], § 3, § 4.1, p. 7) thanks to the computer oriented analysis and modelling, ("for refined review"), a preliminary simplified design (which offers a direct understanding of the overall behaviour) becomes now easier, (see also § 3.2 of this paper).

- Today, it is difficult to limit the well established concept of a truss to only the case of "compressive and tension chords parallel to the surfaces lines" ([1], p. 6). I submit we should use the general term "truss" in every model where force trajectories are substituted by one straight line.

- I friendly confess I was one of those ("code-makers running after cookbook recipes" ?, [1], § 4.2) trying to maximise the fruitfulness of strut- and -tie models in checking plate elements and discontinuity regions. To this end, we do not require a ready made solution ("recipe") but a non-equivokalness of the m e - t h o d o l o g y; and we must anyway give it to the designer. It is only too obvious that the "inner flow of forces adjusts to the reinforcements' layout"; what is to be made explicit is, for a **given** steel pattern, the physical mechanisms which dictate the topology of the truss, out of a large variety of alternatives, all satisfying equilibrium; especially when no other analysis is available. But even in the case a complete elastic analysis is

available, orientations of truss elements are known but a criterion for their density is still needed. That is why the designer needs an additional guidance, especially in some cases where compatibility cannot be overlooked. Similar additional guidance is needed on the exact geometry of nodes (especially in real life supports or loads). Of course, in case the method is used only for a preliminary dimensioning, all this information is not necessary.

But, happily enough, a considerable progress is being made in all these since the first Schlaich's publication in the CEB Bulletin 50, (1982). And this is a welcomed development.

REFERENCES

1.- SCHLAICH J.: "Modelling", Introductory report, IABSE Colloquium "Structural Concrete", Stuttgart, 1991.

2.- TASSIOS T.P.: "Prolegomena to a generalised design space", Introduction to CEB-RILEM International Workshop "Durability of Concrete Structures", Copenhagen, 1985.

3.- BREEN J.E.: "Why Structural Concrete?", Introductory report, IABSE Colloquium "Structural Concrete", Stuttgart, 1991.

4.- TASSIOS T.P.: "A guidance note regarding the format of the MC90", CEB Bull. 189, 1989.

5.- TASSIOS T.P.: Modelling philosophy of Structural Concrete", Invited lecture, IABSE Colloquium "Structural Concrete", Stuttgart, 1991.

6.- EUROCODE 8, "Aseismic Design", Part 1.3: Concrete Structures, C.E.C., Brussels, 1988.

7.- BRUGGELING A.S.G.: "An engineering model of Structural Concrete", Introductory report, IABSE Colloquium "Structural Concrete", Stuttgart, 1991.

Leere Seite
Blank page
Page vide

Detailing of Reinforced Concrete Structures

Détails de construction de structures en béton armé

Konstruieren von Stahlbetontragwerken

D.S. PRAKASH RAO
Lecturer
BITS
Pilani, India

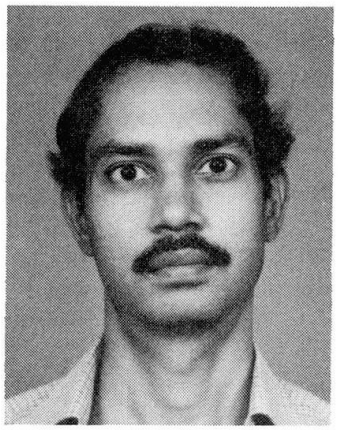

D.S. Prakash Rao obtained his bachelor's and master's degrees in India, and doctorate degree from the University of Melbourne, Australia. He worked as a fellow under German Academic Exchange Service at Stuttgart University. Presently he is engaged in teaching and research in India.

SUMMARY

Codes of practice play a significant role in developing safe and economical structures. However, a design practice that is satisfactory in one country may appear unsafe according to the code of another country. Some of the inconsistencies between the codes of a few countries are discussed in this article. Actual construction practice and the practicability of some of the aspects of concrete structures are also discussed. The need for consistent specifications along with tolerances, and some of the aspects to be incorporated in the codes are indicated.

RÉSUMÉ

Les codes pratiques de construction jouent un rôle significatif dans le développement sûr et économique des structures. Cependant, une norme de dimensionnement satisfaisante dans un pays peut être paraître peu sûre selon le code d'un autre. Quelques unes de ces contradictions entre les codes de certains pays sont discutées dans cet article. La façon de construire actuelle, ainsi que la validité de quelques aspects de structures en béton sont également discutés. La nécessité de spécifications cohérentes sur les tolérances est présentée conjointement aux différents aspects qui doivent être intégrés dans des normes.

ZUSAMMENFASSUNG

Normen spielen eine wichtige Rolle, um sichere und wirtschaftliche Bauwerke zu erstellen. Die zufriedenstellende Entwurfspraxis eines Landes kann jedoch nach der Norm eines anderen Landes unsicher sein. In diesem Artikel werden einige solcher Unsicherheiten zwischen den verschiedenen Normen einiger Länder diskutiert. Weiterhin werden auch die Ausführungspraxis und Fragen der Ausführbarkeit diskutiert. Es werden die Notwendigkeit konsistenter Regeln zusammen mit Toleranzangaben sowie andere notwendige Gesichtspunkte angedeutet.

1. INTRODUCTION

Codes of practice are formulated to provide guidelines on various aspects of analysis and design, and to set minimum standards of safety that are consistent with economy. Considerable efforts go into the preparation of codes of practice, which are often expected to be followed meticulously. The codes of practice of any country are not prepared in isolation, but tend to incorporate the developments reported from other countries as well. Nevertheless, it is surprising to note the differences between the codes of practice pertaining to various countries, and more so when the codes of practice of the same country differ from each other. In addition, construction practices may sometimes differ from the specifications. Some of these may be termed trivial and ignored, but some of the parameters may have a direct bearing on the safety and economy.

Some of the mundane aspects of detailing, such as diameter of hooks, anchorage length, concrete cover and corner reinforcement in slabs, are discussed in this article with reference to the codes of a few countries [1-5]. The actual construction practice and its influence on the performance of structures is also discussed. Some of the aspects to be included in the codes are suggested.

2. DETAILING OF REINFORCEMENT

A practice that is satisfactory in one country may be unsafe by the standards of another country. Local factors should be certainly taken into consideration in developing the codes of practice. However, there is less room for such inconsistencies in the present era of fast communications and exchange of information between the investigators of various countries. There is a need to narrow down these differences, which may appear to be illogical on one hand, and to reduce the chasm between the specified recommendations and construction practice on the other. A few aspects of such glaring examples are discussed briefly here.

2.1 Diameter of hooks and cogs

The specified diameters of hooks and cogs vary over a wide range. Hooks and cogs have a significant role in anchoring reinforcement, and the need for proper specifications can never be over-emphasised. However, a look at Table 1 indicates that the specifications of Indian codes require much larger diameter than DIN 1045 or AS 3600. The parameters of Table 1 are expressed in terms of the bar diameter Φ.

Table 1 Minimum diameter of bend and length beyond hooks and cogs in terms of bar diameter Φ

S. No.	Code of practice	Min. diameter	Min. length beyond bend	
			Hook	Cog
1	IS 456	8 Φ	4 Φ	4 Φ
2	IRC 21	6 Φ	5 Φ	10 Φ
3	DIN 1045	4 Φ*	5 Φ	5 Φ
4	AS 3600	5 Φ	4 Φ $\geq$ 70 mm	@

* upto $\Phi < 20$ mm; and 7 Φ for $20 < \Phi < 28$ mm

@ total length should be the same as that for hook of same diameter

The values of Table 1 pertain to high strength steel (characteristic strength > 400 MPa). It is inexplicable that a diameter of 4 Φ is adequate as per DIN 1045, but IS 456 requires double that value for the same bar. Again, IRC 21 pertaining to the same country as IS 456, recommends a smaller value for the diameter of bend but a larger value for the length beyond hooks and cogs.

A recent survey at construction site revealed that the diameter of bend was between 3 Φ and 5 Φ in 86 percent of the hooks measured as against 8 Φ specified by IS 456 [6]. No cracking or any distress was found on the hooks of high strength deformed bars, indicating that the specified diameter of 8 Φ may be too conservative or impracticable.

2.2 Anchorage length

Anchorage and lap lengths differ significantly as per various codes of practice. Figure 1 and 2 indicate the basic lengths of anchorage in terms of bar diameter (ld/Φ) for tension and compression respectively. Some codes provide the anchorage length directly (DIN 1045 and IRC 21), while others recommend ld as a function of several parameters, such as the strength of steel and concrete, and bar diameter. The values of Figure 1 and 2 are applicable for deformed bars of 415 MPa characteristic strength. The cylinder strength of concrete was converted to cube strength using a factor of 0.8 for the specifications of ACI 318. Further, the value of ld depends upon the cross-sectional area as per ACI 318 and AS 3600, whereas it is a function of bar diameter in the other cases. The values of ld even in the former cases are expressed as a function of Φ for specific bar sizes (12 mm and 35 mm) for comparison. In the case of AS 3600, ld was computed for minimum concrete cover (20 mm or Φ, whichever larger).

IRC 21 yields the most conservative values generally, follwed by IS 456, AS 3600 and DIN 1045. ACI 318 yields the lowest values for bar sizes 9.5 to 16 mm, and the largest values for bar sizes greater than 35 mm. Only AS 3600 considers the influence of concrete cover; the larger the cover, the smaller the value of ld. Significant reduction in ld for bars in compression is recommended by IS

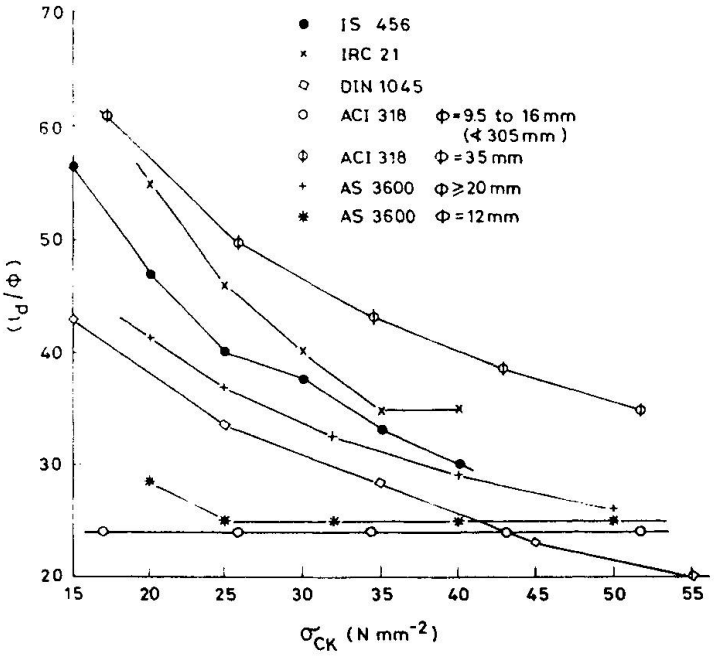

Fig. 1 (ld/Φ) for tension bars

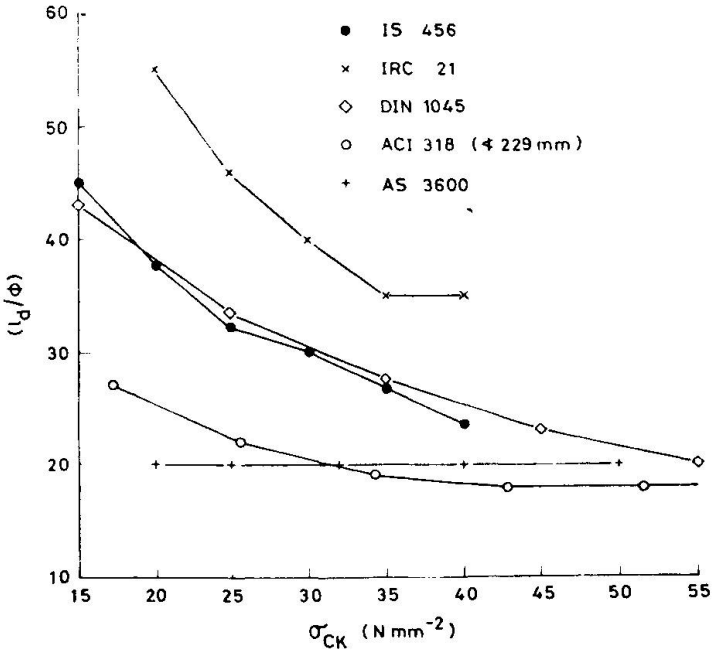

Fig. 2 (ld/Φ) for compression bars

456, ACI 318 and AS 3600, while IRC 21 and DIN 1045 do not recommend any such reduction. While most of the codes recommend a reduction in ld for steel area in excess of the required value at the section, IS 456 does not include any such provision.

2.3 Concrete cover

It is interesting to note that the codes of practice differ in their recommendations for concrete cover as well. While some codes do not distinguish between the requirements of cover for slabs, beams and columns, others do. The differences are all the more glaring between IS 456 and IRC 21 in this regard. The former recommends a minimum concrete cover of 15 mm for slabs and 25 mm for beams subject to a minimum of one bar diameter for mild exposure conditions; IRC 21, on the other hand, recommends a minimum value of 25 mm for slabs less than 150 mm thick, and 30 mm in other cases for concrete strengths upto 30 MPa.

The values of cover specified are generally the nominal values, and tolerances are also recommended sometimes. It may be of interest to note that the conclusions of site surveys on these aspects are not very encouraging [6,7]. Particularly the site measurements on common residential structures indicate the pre-pour cover to be too large, while the post-pour conditions reveal the lack of adequate cover [6]. While IS 456 recommends a minimum cover of 40 mm to the main bars of columns larger than 200 mm, site surveys indicated the maximum cover to be less than 20 mm in about 70 percent of the cases. The specified cover of about 40 mm was provided by mistake rather than by design in all the cases of residential and commercial structures surveyed; cover on the opposite face of the column was barely 5 mm in such cases.

In almost all the cases, too small cover was the result of inadequate or misplaced bar supports [6,7]. The surveys reported from Australia suggest the need for specifications for bar supports and practicable tolerances [8]. Lack of adequate cover is the most common reason for deterioration of concrete than any other cause. Figure 3 (a) and (b) indicate spalled concrete and corroded steel due to lack of adequate cover (less than 10 mm) coupled with porous concrete. The 1.0 m wide cantilever slab of Figure 3 (a) was about 23 years old, and the portico slab of Figure 3 (a) was about 15 years old when concrete spalled; both the structures are located in mild environments away from any major industry. Figure 3 (a) indicates the hooks at the ends of the plain bars are missing for several bars; further, the reinforcement lies at the bottom of the cantilever. The problem of concrete cover appears to be lot more serious in labour intensive construction than in mechanised construction.

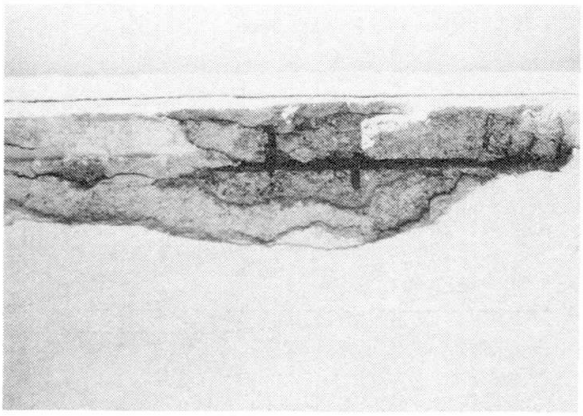

(a) Cantilever slab

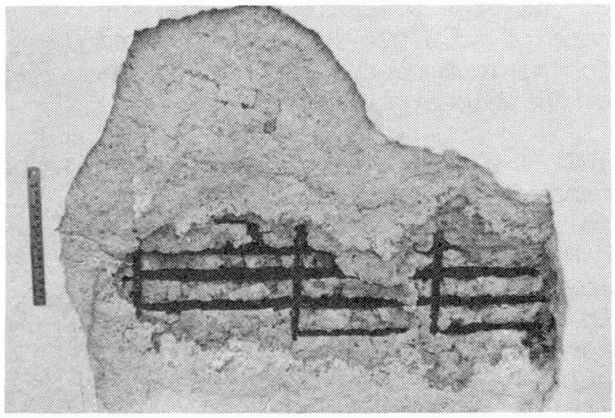

(b) Portico slab

Fig. 3 Corrosion of steel and spalling of concrete due to inadequate cover

2.4 Corner reinforcement in rectangular slabs

The requirements of reinforcement in the corner regions of rectangular slabs for torsional moments differ considerably as per various codes. DIN 1045 recommends orthogonal reinforcement equal to the maximum bottom reinforcement of the slab over 0.3 times the smaller span. However, IS 456 and AS 3600 recommend reinforcement equal to 0.75 times the maximum bottom steel area per metre length over 0.2 times the smaller span.

Obviously, it is much simpler to provide the corner reinforcement the same way as the mid-span bottom bars from practical considerations, rather than reduce it to 75 percent. However, the length factors of 0.3 and 0.2 cannot be explained away; either the value of 0.3 is conservative or 0.2 is inadequate.

The author was embarrassed more than once by the queries of the students regarding the corner reinforcement during site visits. The corner reinforcement was not provided at several sites visited by the author, with no apparent distress to the structures. The reasons could be conservative assumptions regarding material strength and loads or the support conditions.

2.5 Shear reinforcement

Specifications pertaining to shear reinforcement are possibly more elaborate in DIN 1045 than any other code. Not many codes take cognizance of various shear zones in specifying the maximum spacings of stirrups like DIN 1045; AS 3600 takes into account various shear zones by specifying the shear capacity of the section with minimum shear reinforcement. AS 3600 and DIN 1045 do not specify any limit to the angle of inclined reinforcement, while IS 456 and IRC 21 limit the inclination of longitudinal bars to 45 degrees, and ACI 318 to 30 degrees.

It does not appear rational to ignore the bars inclined at less than 45 degrees as per IS 456 or IRC 21, while other codes consider them to be effective.

2.6 Other factors

Similar differences exist regarding the maximum spacings of stirrups, interaction of torsion and flexure, and splices to mention a few. It is difficult to estimate the influence of these parameters on structural performance. However, these specifications are also to be examined to bring more uniformity between various codes.

3 THERMAL STRESSES

It can be said that all the codes of practice deal inadequately with the problem of thermal stresses. Temperature variations through structural depth induce in plane as well as flexural stresses in concrete structures, and the neglect of these stresses leads to inevitable cracking. Cracking of long slabs in transverse direction through the depth due to inadequate distribution reinforcement is a well known problem [6]. The minimum distribution steel recommended by the codes may not be adequate to resist tensile stresses due to temperature variations.

Similarly, cracking of bridges due to temperature effects has led to considerable research on these aspects. However, the codes are yet to incorporate rational specifications regarding design temperature distributions for various structures; the current specifications induce soffit tensile stresses that are higher than actual values for beams of depths less than about 2.0 m, and lower values for larger beam depths [9].

4. CONCLUSIONS

Codes of practice of various countries differ from each other significantly on several aspects. Thus a design practice that may be satisfactory in one country may be unsafe as per the code of another country. Some of these aspects are discussed in some detail along with actual construction practice and the influence on structural performance. There is a need to bring consistency and uniformity between the codes of practice of various countries on one hand, and rationalise the specifications to make them practicable on the other. Further, rational design specifications on temperature effects are still lacking despite the evidence of distress to structures when these aspects are ignored.

It would appear that the design specifications are not always translated into construction practice, particularly those pertaining to concrete cover. Lack of adequate cover is perhaps the most common cause of early deterioration of concrete structures. Thus the need for proper cover specifications and tolerances, and for their implementation can never be over-emphasised. There is a need to formulate specifications for bar supports as well, in order to ensure the required concrete cover.

Consistent specifications that also suggest acceptable tolerances, and extension of the codes of practice to include the aspects discussed in this article should go a long way in developing unambiguous and rational guidelines to help evolve economical and creative designs.

REFERENCES

1. IS 456 - 1978, "Code of practice for plain and reinforced concrete", Bureau of Indian Standards, New Delhi, 1979.

2. IRC 21 - 1987, "Standard specifications and code of practice for road bridges", Section III, The Indian Roads Congress, New Delhi, 1988.

3. DIN 1045, "Beton und Stahlbeton : Bemessung und Ausfuehrung", Institute for German Standards, Berlin, 1979.

4. AS 3600 - 1988, "Concrete Structures", Standards Association of Australia, Sydney, 1988.

5. ACI 318 - 83, "Building code requirements for structural plain concrete", American Concrete Institute, Detriot, Michigan, 1983.

6. Morgan, P. R. et al, "Reinforcement placement in rectangular concrete slabs", Civil Engineering Transactions, Institution of Engineers (Australia), Vol. CE24, No. 1, February 1982, pp 24-33.

7. Prakash Rao, D. S. et al, "Construction practice and codes of practice — a correlation", The Indian Concrete Journal, under publication.

8. Morgan, P. R. et al, "Slab reinforcement location versus code specification", Civil Engineering Transactions, Institution of Engineers (Australia), Vol. CE28, No. 3, July 1986, pp 147-152.

9. Prakash Rao, D. S., "Temperature distributions in concrete bridges", Journal of the American Concrete Institute, Vol. 83, No. 4, July-August 1986, pp 588-596.

New Design Concepts and Codes of Practice

Nouvelle conception de dimensionnement et normes techniques

Bemessungskonzepte in Normen und Vorschriften

Hans-Ulrich LITZNER
Civil Engineer
Deutscher Beton-Verein E.V.
Wiesbaden, Germany

Hans-Ulrich Litzner, born 1945, received his civil engineering degree at the RWTH Aachen. For more than ten years he has been involved in the development of national and international Codes of Practice. He is now Chairman of a Sub-Committee of CEN preparing European Prestandards (ENV) for the design and execution of concrete structures.

SUMMARY

This paper gives reasons for the need to reconsider the current, traditional form of Codes of Practice for the design of concrete structures. It is recommended to replace – at least partly – the relevant, isolated design rules with a more general, comprehensive concept. Proposals for the basic elements of this new concept are submitted. It is intended to implement them – as far as possible – in the future European Standards issued by CEN.

RÉSUMÉ

Cet article explique les raisons du besoin de reconsidérer les formes courantes des normes de dimensionnement des structures en béton armé. Il s'agit donc de remplacer, au moins partiellement, les règles de conception isolées courantes par un concept plus général et plus intelligible dans ce contexte. Des propositions concernant des éléments de base sont présentés. On cherchera à les insérer de façon la plus étendue possible dans les futures Normes européennes du CEN.

ZUSAMMENFASSUNG

Dieser Beitrag begründet die Notwendigkeit, die bisherigen traditionellen Strukturen von Normen und Vorschriften für die Bemessung von Betonbauwerken zu überprüfen und zumindest bereichsweise zugunsten eines moderneren, umfassenderen Konzepts aufzugeben. Vorschläge für die wesentlichen Elemente dieses neuen Konzepts werden unterbreitet. Sie sollen – soweit dies möglich ist – in den künftigen europäischen CEN-Normen verankert werden.

1. INTRODUCTORY NOTE

In the following considerations, the term "design concept" is not limited to a specific design procedure, such as for example, the numerical verification of the structural performance in the serviceability or in the ultimate limit states.

Design concept ist rather understood as the complete set of information necessary for the planning, dimensioning, execution and maintenance of buildings and civil engineering works. New concepts therefore means an appropriate structure, form of presentation and technical contents of these Codes which meet the requirements of the users.

2. ASSESSMENT OF EXISTING CODES OF PRACTICE

Codes of Practice for the design, execution and maintenance of concrete structures were first prepared at the beginning of this century when the rapidly growing knowledge of this new construction material and ingenious ideas of engineers opened the way for its world wide application which very soon culminated in outstanding concrete structures [1]. Since its beginning the evolution of concrete construction was marked by the continuous progression of both theoretical and practical knowledge. This led to a step by step improvement and up-dating of these documents reflecting increasing expertise and experience.

However, due to the predominent preoccupation in the past to preparing documents which give immediate reliable answers to the growing technical problems, more attention was paid to the technical contents rather than to considerations concerning adequate concepts for a rational and consistent presentation.

One result of this development is that - even today - Codes of Practice very often constitute more a conglomeration of individual design rules than a sound physical basis. Their use is difficult and is likely to lead to misinterpretations. Therefore and taking into account the need of the today-user, increased attention should be paid to improving the conceptional quality of these documents.

3. REQUIREMENTS FOR FUTURE CODES OF PRACTICE

A Code of Practice is applied by several user groups. When considering the construction sector, the main groups are:

- building authorities,
- public or private clients,
- architects and civil engineers,
- contractors, sub-contractors and material suppliers
- universities, science,
- national or international Standards Organizations which are involved in the up-dating and revision of the codes,

and finally

- secondary industries such as for example, the computer and software industry.

It is obvious that the needs and consequently the requirements of these groups are more or less different and concern mainly legal, contractual, economic and technical aspects. On the other hand - and this is an experience - a future Code will be accepted only by these groups if their needs are in an appropriate form taken into account.

Recently, when developing new Codes of Practice [2], [3] or similar documents [4], the requirements of the user-groups have been soundly discussed on a national and an international level. The result of this discussion may be summarized as follows:

- the structure of future Codes shall be characterised by unambiguity, clarity and transparancy of the Code as a whole and of its individual clauses;
- concerning the technical contents, rationality of the design concept is required; it should permit flexibility, progress and new developments;
- the Code shall be user-friendly; that means that the form by which and the (scientific) level on which information is given takes account of the need and the skill of the user; the language used shall be understandable;
- the replacement of individual clauses by equivalent rules should be possible without affecting the structure of the Code as a whole. This allows a permanent adjustment to progressing knowledge;
- it is wished that - by means of an appropriate structure - the Codes can be revised in a short-term period.

It is obvious that some of these requirements have a qualitative character only. For example, the skill of the user differs within and between the user-groups and - with regard to the future European Codes - from country to country. In this example, the term "user-friendliness" therefore depends on the individual conditions, the education and motivation of the user. In spite of these difficulties, a rough description of the main elements of a future code can be given.

4. GUIDELINES FOR FUTURE CODES OF PRACTICE

4.1 Types of Technical Documents

More than in the past, two categories of technical documents should be distinguised: A first group which is as far as possible independent from a specific type of building or civil engineering work and in which all requirements and informations are compiled which are relevant for the majority of concrete structures. They will be complemented by a second set of technical documents representing only those aspects which are valid for particular types of structures, design procedures or technologies. The interface between these types of documents shall be without any ambiguity.

4.2 Defition of Requirements

The user of a Code of Practice expects an answer to the question "why". For this reason, it is important to define the performance requirements clearly distinguishing between safety aspects, serviceability and durability criteria [1].

Safety is understood as the ability of a structure as a whole and of its individual parts to sustain with appropriate levels of reliability all agents liable to act upon it either directly or indirectly in normal use (including construction) during the course of its anticipated life.

Serviceability denotes the ability to perform adequately in normal use during the anticipated service life with an appropriate level of reliability.

Durability means the ability of a structure and its parts to maintain the required performance during the design service life. This requires in particu

lar to withstand biological, chemical and physical deterioration processes - with levels of reliability appropriate both to safety and all serviceability requirements including appearance.

These specific aspects should be considered in all parts of the Code, corresponding rules and design models should be given (ultimate limit states, serviceability limit states). Mixing of these requirements in individual clauses should be avoided.

4.3 Improvement of Design Models

For design purposes, the physical reality of the structural behaviour is approximately described by a number of isolated design models. The term "isolated" means that very often various design rules are used in parallel without veryfying whether they are compatible or not. A typical example is the use of models based on Bernoulli's assumption of plane strain destribution also in cases where this precondition is not fulfilled. A further example concerns the application of different models for prestressed and reinforced concrete even if their physical behaviour is similar. Therefore, more rationality is required in the future.

Design models should as far as possible be usable - their field of application should not a priori limited to specific types of structures. All aspects related to the model should be considered in all parts of the Code, e.g. in the clauses dealing with structural analysis, verification of the limit states and the detailing. From this basic model, appropriate simplifications can be derived which may be used for a limited field of application. These limits, however, should be defined clearly in order to avoid inappropriate application.

4.4 Quality Assurance

Quality assurance is one main item which is actually discussed on national and international levels. There is no doubt that the quality of concrete structure depends to a certain extent on the quality of the Codes of Practice by means of which it has been designed. Therefore, quality assurance aspects need to be taken into account.

This can be done in two ways: to define measures and procedures in the Code which are directly related to quality assurance. A second (and more difficult) procedure is to find a lay-out and a form of presentation which leads - in connection with the skill of the user - to an adequate quality.

It is recognized that quality assurance is the most difficult area in future Codes of Practice. Nevertheless, improvement will be necessary.

REFERENCES

1. COMITE EURO-INTERNATIONAL DU BETON (CEB), Conceptional Preparation of Future Codes. CEB-Bulletin d'Information No. 147. Paris: February 1982.

2. EUROCODE No. 2, Design of Concrete Structures. Part 1: General Rules and Rules for Buildings. Revised Final Draft December 1989.

3. DIN 18 800 Part 1, Steel structures; design and construction. Draft March 1988.

4. CEB-FIP MODEL CODE 1990. First Draft. CEB-Bulletins d'Information No. 195 and 196. Lausanne: March 1990.