Zeitschrift: IABSE reports = Rapports AIPC = IVBH Berichte

Band: 60 (1990)

Artikel: Composite steel girder, precast concrete slabs and in-situ concrete

Autor: Kozák, Jii

DOI: https://doi.org/10.5169/seals-46480

Nutzungsbedingungen

Die ETH-Bibliothek ist die Anbieterin der digitalisierten Zeitschriften auf E-Periodica. Sie besitzt keine Urheberrechte an den Zeitschriften und ist nicht verantwortlich für deren Inhalte. Die Rechte liegen in der Regel bei den Herausgebern beziehungsweise den externen Rechteinhabern. Das Veröffentlichen von Bildern in Print- und Online-Publikationen sowie auf Social Media-Kanälen oder Webseiten ist nur mit vorheriger Genehmigung der Rechteinhaber erlaubt. Mehr erfahren

Conditions d'utilisation

L'ETH Library est le fournisseur des revues numérisées. Elle ne détient aucun droit d'auteur sur les revues et n'est pas responsable de leur contenu. En règle générale, les droits sont détenus par les éditeurs ou les détenteurs de droits externes. La reproduction d'images dans des publications imprimées ou en ligne ainsi que sur des canaux de médias sociaux ou des sites web n'est autorisée qu'avec l'accord préalable des détenteurs des droits. En savoir plus

Terms of use

The ETH Library is the provider of the digitised journals. It does not own any copyrights to the journals and is not responsible for their content. The rights usually lie with the publishers or the external rights holders. Publishing images in print and online publications, as well as on social media channels or websites, is only permitted with the prior consent of the rights holders. Find out more

Download PDF: 11.01.2026

ETH-Bibliothek Zürich, E-Periodica, https://www.e-periodica.ch

Composite Steel Girder, Precast Concrete Slabs and In-Situ Concrete

Structures portantes mixtes composées de poutres métalliques, de dalles préfabriquées et de béton coulé sur place

Verbundkonstruktionen aus Stahlträgern, vorgefertigten Betonplatten und Ortsbeton

Jiři KOZÁK
Dr. techn.
VÍTKOVICE Steelworks
Bratislava, CSSR

Steel girders with the supplementary reinforcing bars and precast parts of the concrete floor slab in the optimal position on the girder are jointed by in-situ concrete in a stiff composite structure. The steel girder is able alone or by means of a temporary supporting to carry all loading during the erection stage. The precast plates creat the plattform for concreting of steel-reinforced concrete vertical structures and the shuttering for the slab.

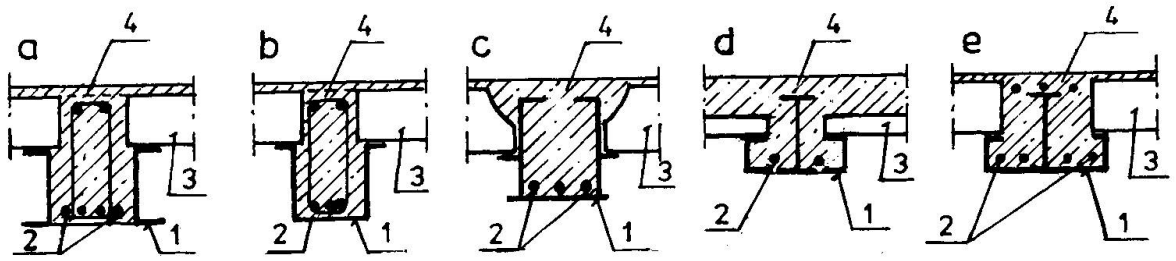

Fig.1. Steel girder composite by concrete slab :
1 - steel part (girder), 2 - reinforcing bar
3 - precast part of slab, 4 - in-situ concrete

Steel girder 1 could be variously arranged (Fig.1) :
a) steel girder composed of two U-sections, b) boxed-shaped section, c) composed two-wall section, d) rolled I section with two U-profiles on the bottom, e) composed asymmetric one-wall section etc.

Reinforcing bars placed on the bottom of the girder 2a increase the positive moment strength and bars placed on the upper chord 2b increase the continuity of girder and the negative moment strength. The reinforced bars protected by concrete increase the fire resistance of girder.

The floor slab is usually constructed of two parts: precast part and in-situ concreted one. The precast part 3 could be in dependence on the span, loading, structural height and the realization technology of various kind. It could be e.g. the mass-produced elements used in other structural systems. At span to 6 m are frequently used panel light-weighted by circular holes made from usual concrete, at spans large than 6 m from the prestressed concrete. The circular holes in the precast panel must be stopped

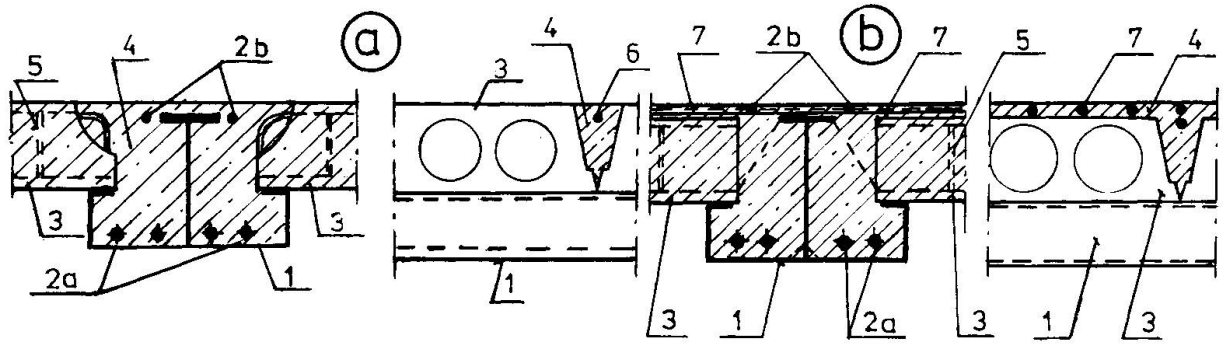

Fig.2. Supporting of precast panels on the steel girder
a - normal panel + monolitizing concreting
b - prestressed panel + in-situ concrete

5 before concreting (Fig.2), the concrete mixture entrences only in the needed parts, subsequently the shear strength of panel in the support region is higher and the panel is fully integrated in the composite structure. At panels, the concreting reachs only to their upper border or includes the upper concrete layer. The continuity of the slab could be achieved by means of transverse reinforcing bars situated in the longitudinal contact gaps 6 or in the upper layer 7 .

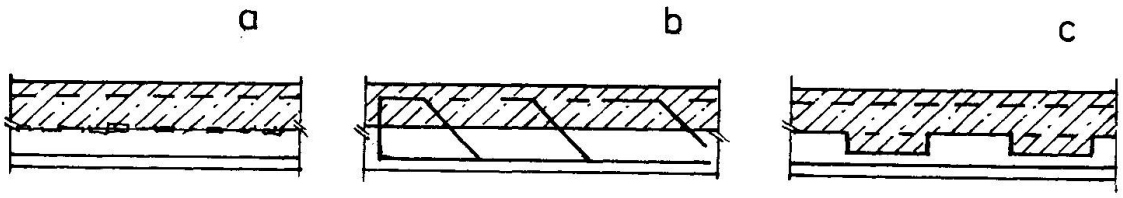

Fig.3. Two layer concrete slab

At two layer composite concrete slab, the adhesion between two layers has the primary importance. It could be achieved (Fig.3): a) by the roughness of the upper surface, b) by shear reinforcing bars, c) by ribs.