Zeitschrift: IABSE reports = Rapports AIPC = IVBH Berichte
Band: 57/1/57/2 (1989)

Artikel: Durability provisions for prestressed concrete
Autor: Blades, John T. / Perl, George C.
DOI: https://doi.org/10.5169/seals-44260

Nutzungsbedingungen
Die ETH-Bibliothek ist die Anbieterin der digitalisierten Zeitschriften auf E-Periodica. Sie besitzt keine Urheberrechte an den Zeitschriften und ist nicht verantwortlich für deren Inhalte. Die Rechte liegen in der Regel bei den Herausgebern beziehungsweise den externen Rechteinhabern. Das Veröffentlichen von Bildern in Print- und Online-Publikationen sowie auf Social Media-Kanälen oder Webseiten ist nur mit vorheriger Genehmigung der Rechteinhaber erlaubt. Mehr erfahren

Conditions d'utilisation
L'ETH Library est le fournisseur des revues numérisées. Elle ne détient aucun droit d'auteur sur les revues et n'est pas responsable de leur contenu. En règle générale, les droits sont détenus par les éditeurs ou les détenteurs de droits externes. La reproduction d'images dans des publications imprimées ou en ligne ainsi que sur des canaux de médias sociaux ou des sites web n'est autorisée qu'avec l'accord préalable des détenteurs des droits. En savoir plus

Terms of use
The ETH Library is the provider of the digitised journals. It does not own any copyrights to the journals and is not responsible for their content. The rights usually lie with the publishers or the external rights holders. Publishing images in print and online publications, as well as on social media channels or websites, is only permitted with the prior consent of the rights holders. Find out more

Download PDF: 07.01.2026

ETH-Bibliothek Zürich, E-Periodica, https://www.e-periodica.ch

Durability Provisions for Prestressed Concrete

Réglementations pour la durabilité du béton précontraint

Dauerfestigkeitsbestimmungen für Spannbeton

John T. BLADES
Structural Engineer
Rankine & Hill Pty. Ltd
Sydney, Australia

John Blades, born Sydney, 1959, received an Honours degree in Civil Engineering from the University of Sydney and a Master of Engineering Science degree from the University of N. S. W. He has been involved in the structural design of reinforced concrete and structural steelwork for industrial and commercial structures and prestressed concrete bridges.

George C. PERL
Structural Engineer
Mateffy-Perl-Nagy Consult.
Sydney, Australia

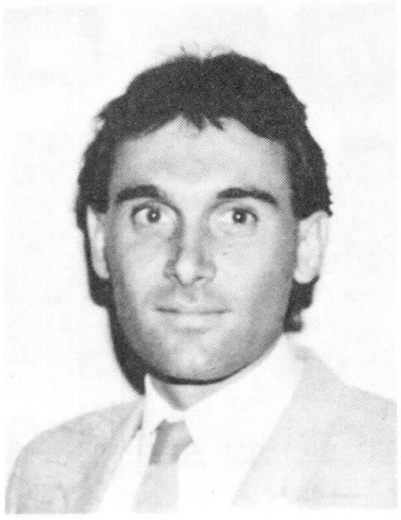

George Perl completed a Science and Civil Engineering (Honours) degree in 1938 at the University of Sydney. After working in the Netherlands and Libya, he jointed the M. P. N. Group in 1985 and has designed various prestressed and reinforced concrete structures in Australia and California. In 1989 he completed a Masters degree at the University of N. S. W.

SUMMARY

The consequences of durability — related damage to structures comprising prestressed concrete are potentially greater than for those comprising reinforced concrete. This paper discusses the differences between durability behaviour of prestressed and reinforced concrete. Recommendations of codes and code provisions for durability of prestressed concrete are given. Results of a survey investigating the durability provisions of European, Australian and American concrete codes of practice are presented.

RÉSUMÉ

Les conséquences de dommages relatifs à la durabilité du béton précontraint sont potentiellement plus sérieuses que dans le cas du béton armé. Ce document examine les différences entre le comportement à long terme du béton précontraint et armé. Les recommandations et réglementations des codes sur la durabilité du béton précontraint sont présentées. Les résultats d'une enquête examinant les réglementations européennes, australiennes et américaines de durabilité sont donnés.

ZUSAMMENFASSUNG

Die Folgen von Dauerfestigkeitsschäden an Bauwerken aus Spannbeton sind unter Umständen grösser als diejenigen an Bauwerken aus Stahlbeton. Diese Studie behandelt die Unterschiede im Langzeitverhalten von Spannbeton gegenüber Stahlbeton. Empfehlungen von Normen und deren Bestimmungen für die Festigkeit von Spannbeton sind gegeben. Die Ergebnisse einer Zusammenstellung, welche die Dauerfestigkeitsbestimmungen für europäische, australische and amerikanische Betonnormen untersucht, werden dargestellt.

1. INTRODUCTION

In spite of the generally more detailed design and construction phases of prestressed compared to reinforced concrete, durability provisions for the former are often not given sufficient consideration.

Corrosion of prestressing tendons appears to be very much less common than for ordinary reinforcement and there have certainly been very few documented cases of failure due to severe durability problems in prestressed concrete components. Despite this, corrosion of prestressing cables in prestressed concrete construction presents a high risk of building failure. As a consequence of the high tensile stresses present in the small diameter prestressed wires, progressive loss of cross-sectional area due to corrosion induces rapidly increasing tensile stresses.

Despite the agreement of most researchers that the consequences of durability related damage to prestressed concrete are generally far greater than for reinforced concrete, most of the research work into durability of concrete structures has been carried out for ordinary non-prestressed reinforcement and many codes of practice throughout the world do not recognise a difference in the durability behaviour of the two types of construction.

2. MAJOR FACTORS AFFECTING DURABILITY [1],[2],[3]

2.1 Concrete Cover to Reinforcement or Tendons

Cover provides both chemical and physical protection to the steel. "Quality of concrete cover" is also essential.

2.2 Water/Cement Ratio of the Concrete Mix

Concrete permeability, and thus the rate at which carbon dioxide or aggressive agents such as chlorides can penetrate the concrete, increases as the water/cement ratio increases. Thus, concrete "quality" largely depends on the water/cement ratio.

2.3 Cement Content of the Concrete Mix

Maximising the cement content of the concrete (without causing other problems) greatly contributes to its "quality". Reducing the cement content of a mix reduces its chloride binding capacity and also its neutralising capacity against the effect of CO_2 ingress.

2.4 Characteristic Compressive Strength at 28 days (fc_{28})

It is generally agreed that durability is more dependent on the previously mentioned mix design factors and construction practice than on fc_{28} alone. This is due to the possibility of producing an adequate fc_{28} with an inadequate value of cement content or water/cement ratio as far as durability is concerned.

3. DIFFERENCES BETWEEN DURABILITY BEHAVIOUR OF PRESTRESSED & REINFORCED CONCRETE

3.1 Design

In prestressed concrete higher quality materials need to be used, with corresponding attention to quality assurance, to ensure durability.

The latest Australian Concrete Structures Code AS 3600 reflects the international trend towards "limit state" design. This provides a unified approach to the design of prestressed and reinforced concrete structures, but does not highlight any differences in durability behaviour between these two forms of construction.

Differences in durability should be emphasised at the design stage.

3.2 Materials [2]

3.2.1 Grouts and Grouting

Grouts and grouting for post-tensioned structures present a special aspect of concrete technology. Portland cement grouts have been found to be extremely efficient in preventing corrosion. This is dependent on the ducts being completely filled, since corrosion can occur in the cavities of improperly grouted ducts. Such cavities have been studied and it has been found that:

"a) Voids form more readily at higher flow velocities.
b) More voids form at high steel-to-duct area ratios.
c) Voids in the grout tend to disappear when grouting pressures are maintained constant after the grouting is completed.
d) Voids can be caused by the presence of bleed water in pockets. This bleed water is reabsorbed after the grout hardens, thus leaving a void in the structure."[2]

Non-grouted systems (popular in North America) rely on other than the passivating protection of the grout. The procedure is to grease the tendons, sheathed in a plastic duct, and seal the anchor assembly with a mortar plug.

3.2.2 Prestressing Steel

The types of corrosion that are of greatest concern are pitting, stress corrosion and hydrogen embrittlement.

Pitting is similar to the severe corrosion of reinforcement found in reinforced concrete structures. Stress corrosion results from a combination of stress and corrosion, and can lead to delayed fracture of the prestressing steel. Hydrogen embrittlement results from the embrittlement of steel by hydrogen, and can also lead to delayed fracture.

The delayed fracture mechanisms mentioned above are restricted to prestressed concrete, and cause brittle failure of the steel, often without any significant corrosion of the steel surface. Stress corrosion and hydrogen embrittlement are intrinsically more dangerous than pitting corrosion in that they may cause sudden failure, without any prior signs of distress.

4. CODE PROVISIONS AND A CODE COMPARISON

4.1 Introduction

The main aim of this paper was to carry out a study and comparision of various codes of practice for concrete structures to review how they ensure durable prestressed concrete structures and whether they recognise differences in the durability requirements for prestressed compared to reinforced concrete.

For this survey we have chosen what researchers generally believe to be the four most important factors which affect the durability of prestressed and reinforced concrete structures. These factors were introduced in Section 2 of this paper. The results of the code comparision are presented in Tables 1 and 2 for exterior (Ext.) and interior (Int.) environments. These results are summarised in the following sections.

4.2 Cover

Of the codes compared in Table 1, the only ones which recognise a difference in the minimum cover required for prestressed compared to reinforced concrete structures are: Australian Standard AS1481 (1978), ACI318M (1983), CEB-FIP MC78 (1978), FIP Recommendations (1984) and Danish Standard DS 411 (1984). The ACI and CEB-FIP Codes regard stressed tendons as "reinforcement sensitive to

corrosion", this is consistent with the belief of most researchers. The ACI Code recognises the corrosion of highly stressed tendons as such a serious problem that where the extreme fibre concrete tensile stress exceeds the allowable value of $\sqrt{fc_{28}}/2$, the minimum cover for prestressed concrete members increases by 50%.

TYPICAL STRUCTURE IN METROPOLITAN SYDNEY (within 1km to 50km from coastline), fc_{28} = 32MPa													
CODES	REINFORCED CONCRETE (Reinf. bar diam 36mm) COVER (mm) i), ii)						PRESTRESSED CONCRETE (POST-TENSIONED) COVER (mm) i), ii)						COMMENTS
	BEAM		SLAB		WALL		BEAM		SLAB		WALL		
	Ext.	Int.	Ext.	Int.	Ext.	Int.	Ext.	Int.	Ext.	Int.	Ext.	Int.	
Australian AS1480(1982)	40	25	30	20	30	20							Cover to all reinforcement.
Australian AS1481(1978)							40	25	40	25	40	25	Cover to duct.
Australian AS3600(1988)	40	20	40	20	40	20							Cover to all reinforcement.
							40	20	40	20	40	20	
American ACI318M (1983)	40	40	40	20	40	20							Reinf. bar diam. < 20mm) cover to all]
	50	40	50	20	50	20							Reinf. bar diam. ≥ 20mm) reinf't] iii).
							40	40	30	20	30	20	Extreme fibre tensile stress ≤ $\sqrt{fc_{28}}/2$) cover]
							60	60	45	30	45	30	Extreme fibre tensile stress > $\sqrt{fc_{28}}/2$) to duct]
British CP110(1980)	40	15	40	15	40	15							Cover to all reinforcement.
							40	15	40	15	40	15	Cover to tendons.
British BS8110 (1985) fc_{28} = 34MPa	40	25	40	25	40	25							Cover to all reinforcement.
							40	20	40	20	40	20	Cover to duct.
European CEB-FIP MC78 (1978)	25	15	25	15	25	15							Cover to all reinforcement.
							35	25	30	25	35	25	Cover to sheath around tendon.
							Greater than b,h/2 or the values for reinforced (but ≯ 40)						b = width) h = depth) of duct
European FIP (1984)	25	15	25	15	25	15							Cover to all reinforcement.
							35	25	35	25	35	25	≮ duct diam., ≯ 40. Cover to duct.
Danish DS411(1984)	20	10	20	10	20	10							Cover to all reinforcement.
							35	30	35	30	35	30	Cover to tendons.

Notes:
i) Unbundled reinforcement
ii) Covers generally to be not less than the reinf. bar or tendon diam. to which the cover is measured or the max. nominal aggregate size.
iii) Prestressing with unbonded tendons is common practice.

Table 1 A Code Comparison for Cover

4.3 Water/Cement Ratio

Referring to the code comparision for w/c ratio carried out in Table 2, it can be seen that none of the codes studied specify a lower w/c ratio (and hence less permeable concrete) for prestressed compared to reinforced concrete, as recommended by many researchers.

4.4 Cement Content

The code comparision for cement content carried out in Table 2 indicates that the British (CP110 and BS8110) and CEB-FIP (MC78) Codes are the most consistent with research recommendations requiring an increase in cement content for prestressed (compared to reinforced) concrete, to ensure improved durability.

4.5 Characteristic Compressive Strength at 28 Days (fc_{28})

The code comparision for fc_{28} carried out in Table 2 indicates that only the British (CP110 and BS8110) and CEB-FIP(MC78) Codes require a higher fc_{28} for prestressed compared to reinforced concrete to ensure higher quality concrete,as generally recommended for prestressed construction.

TYPICAL STRUCTURE IN METROPOLITAN SYDNEY (within 1km to 50km from coastline)																																				
	MAXIMUM WATER/CEMENT RATIO												MINIMUM CEMENT CONTENT (kg/m³)												MINIMUM CHARACTERISTIC COMPRESSIVE STRENGTH AT 28 DAYS (fc_{28}) (MPa)											
CODES	REINFORCED						PRESTRESSED (POST-TENS.)						REINFORCED						PRESTRESSED (POST-TENS.)						REINFORCED						PRESTRESSED (POST-TENS.)					
	BEAM		SLAB		WALL		BEAM		SLAB		WALL		BEAM		SLAB		WALL		BEAM		SLAB		WALL		BEAM		SLAB		WALL		BEAM		SLAB		WALL	
	Ext.	Int.	Ext.	Int.	Ext.	Int.	Ext.	Int.	Ext.	Int.	Ext.	Int.	Ext.	Int.	Ext.	Int.	Ext.	Int.	Ext.	Int.	Ext.	Int.	Ext.	Int.	Ext.	Int.	Ext.	Int.	Ext.	Int.	Ext.	Int.	Ext.	Int.	Ext.	Int.
Australian AS1480(1982)	0.6	0.6	0.6	0.6	0.6	0.6							—	—	—	—	—	—							—	—	—	—	—	—						
Australian AS1481(1978)							0.6	0.6	0.6	0.6	0.6	0.6							—	—	—	—	—	—							20	20	20	20	20	20
Australian	—	—	—	—	—	—							—	—	—	—	—	—							32	20	32	20	32	20						
AS3600(1988)							—	—	—	—	—	—							—	—	—	—	—	—							32	20	32	20	32	20
American	0.5	—	0.5	—	0.5	—							—	—	—	—	—	—							25	—	25	—	25	—						
ACI318M(1983)							0.5	—	0.5	—	0.5	—							—	—	—	—	—	—							25	—	25	—	25	—
British	0.5	0.7	0.5	0.7	0.5	0.7							360	250	360	250	360	250							21	17	21	17	21	17						
CP110(1980)							0.5	0.7	0.5	0.7	0.5	0.7							360	300	360	300	360	300							25	25	25	25	25	25
British	0.55	0.65	0.55	0.65	0.55	0.65							325	275	325	275	325	275							34	25	34	25	34	25						
BS8110 (1985)							0.55	0.60	0.55	0.60	0.55	0.60							325	300	325	300	325	300							34	30	34	30	34	30
European CEB-FIP	0.5 i)	0.7	0.5 i)	0.7	0.5 i)	0.7	0.5 i)	0.7	0.5 i)	0.7	0.5 i)	0.7	240	240	240	240	240	240							16	16	16	16	16	16						
MC78 (1978)	0.6 ii)	0.7	0.6 ii)	0.7	0.6 ii)	0.7	0.6 ii)	0.7	0.6 ii)	0.7	0.6 ii)	0.7							270	270	270	270	270	270							25	25	25	25	25	25
European	—	—	—	—	—	—							—	—	—	—	—	—							—	—	—	—	—	—						
FIP (1984)							—	—	—	—	—	—							—	—	—	—	—	—							—	—	—	—	—	—
Danish	0.6	0.6	0.6	0.6	0.6	0.6							375	—	375	—	375	—	375	—	375	—	375	—	25	15	25	15	25	15						
DS411(1984)							0.6	0.6	0.6	0.6	0.6	0.6	iii)		iii)		iii)		iii)		iii)		iii)								25	15	25	25	25	15

Notes: i) Thickness of concrete: 100mm to 400mm. ii) Thickness of concrete > 400mm iii) Cement and find sand (grain size < 0.25mm).

Table 2 Code Comparisons for Water/Cement Ratio, Cement Content and Characteristic Compressive Strength at 28 days

4.6 Other Factors

Some of the codes of practice used in this comparision also limit the sulphate and chloride ion contents in the concrete mix and the allowable crack widths. Those codes which limit the latter two of these generally halve the limit for prestressed compared to reinforced concrete while those which specify a maximum sulphate content (AS3600, CP110 and BS8110) do not differentiate between the two types of construction.

5. CASE STUDIES AND SURVEYS OF DURABILITY PROBLEMS IN PRESTRESSED CONCRETE STRUCTURES IN SERVICE

5.1 U.S. Army Corps of Engineers. Durability and Behaviour of Prestressed Concrete Beams [4]

In June 1961, 20 air-entrained, post-tensioned concrete beams were placed at the Treat Island, Maine, exposure station at mean tide level and have undergone twice daily tidal inundations and an average of 129 cycles of freezing and thawing each winter. In September 1973, December 1974 and January 1983 a number of the beams were evaluated to determine the extent of corrosion that had occurred.

5.2 The Berlin Congress Hall Collapse [5]

The Berlin Congress Hall was built in 1957. On May 21, 1980, the southern overhanging portion of the roof collapsed without warning. The roof was a prestressed concrete shell structure with tendons lying within the roof membrane. The roof panels were resting on bituminous paper on top of the tensioning ring. Several tubes covering tensioning tendons were in contact with this paper. "Humidity and carbon dioxide were able to penetrate via this paper to the tensioning elements, causing severe corrosion." See Fig. 1.

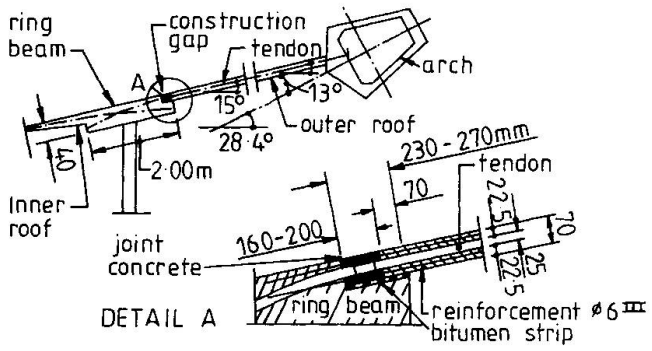

Fig.1 Detail of Arch and Ring Beam Construction

5.3 Humidification Chamber [6]

5.3.1 Introduction

The humidification chambers constructed in 1970 are used in Australia to store hardboard at a temperature of 175°C. Each chamber is 15m x 1.72m x 5.73m high. Warm air at 65 - 90°C and 92% to 95% RH is circulated through the gallery.

5.3.2 Construction

In order to facilitate speed of construction the consulting engineers devised a precast system, whereby two of the chambers were formed using precast slabs spanning between the walls of the other insitu chambers. The whole construction was held together by transverse and longitudinal prestressing tendons of 2/12.5mm dia. imparting a uniform prestess of approximately 1MPa.

Epoxy mortar was used for all horizontal joints and as a filler around duct joints. All internal concrete was protected by fibreglass.

5.3.3 Failure

During 1980 concrete began spalling off the ends of the suspended slabs separating the upper and lower chambers due to extensive corrosion of the prestressing tendons in these slabs.

Following extensive investigations the mechanism for failure was finally ascertained. At the operating temperature fibreglass is porous and allowed water, which failed to drain properly from the intermediate slab, through the epoxy mortar joints into the prestressing ducts (which had not been properly grout filled). The epoxy mortar was not resistant to the operating regime and consequently perished. The tendon ducts finally became water-logged and the tendons were consumed by a weak acid solution.

6. CONCLUSION

Durability problems in concrete structures result from inadequate detailing and specification at the design phase and/or poor work practices during the construction phase of a structure.

The corrosion of prestressing steel is fraught with more danger than that of normal non-prestressed reinforcement. The corrosion of prestressed steel proceeds at a faster rate than that of non-prestressed reinforcement under identical conditions, and presents a higher risk of building failure.

As steel is more susceptible to corrosion when stressed, prestressed concrete should require stricter durability control than reinforced concrete. Of the Codes of Practice for the Structural Use of Concrete reviewed in this paper several do not recognise a difference in the durability behaviour of the two types of construction.

Codes of Practice should reflect the recommendations of researchers by establishing stricter durability provisions for prestressed compared to reinforced concrete, particularly in the areas of cover, water/cement ratio, cement content, 28 day compressive strength, chloride ion content and sulphate ion content.

REFERENCES

1. DARWIN, D., MANNING, D.G., HOGNESTAD, E., BEEBY, A.W., RICE, P.F., and GHOWRWAL, A.Q., Debate: Crack Width, Cover and Corrosion. ACI Journal: Concrete International: Design and Construction, Vol. 7, No. 5, May, 1985.
2. ROPER, H., Various Papers. The University of Sydney School of Civil Engineering Post Graduate Course: Avoiding Trouble in Structural Concrete, August, 1977.
3. HEIMAN, J.L., The Durability of Cast-in-Situ Reinforced Concrete. NBTC, Technical Record 511, June, 1985.
4. O'NEIL, E.F., and ODOM, G.L., Durability and Behaviour of Prestressed Concrete Beams. Report 6: Post-tensioned Concrete Beam Investigation, Supplemental Laboratory Tests of Beams Exposed from 1961 to 1982. (U.S. Department of Army, Waterways Experiment Station, Corps of Engineers Technical Report No. 6 - 570, October, 1984, pp26.).
5. BUCHARDT, F., MAGIERA, G., MATTHEES, W., and PLANK, A., Structural Investigation of the Berlin Congress Hall Collapse. Concrete International: Design and Construction, Vol. 6, No. 3, March, 1984.
6. VAN DER MOLAN, J.L., Repairs to Humidification Chamber. Concrete Institute of Australia Seminar on Repairing Concrete, October 27, 1981.
7. Various Codes of Practice for the Structural Use of Concrete. See Tables 1 and 2.

Leere Seite
Blank page
Page vide