Zeitschrift: IABSE reports = Rapports AIPC = IVBH Berichte
Band: 54 (1987)

Artikel: Ultimate load capacity of an iceberg-loaded gravity base structure
Autor: Vos, Charles J. / Hertog, Dick den
DOI: https://doi.org/10.5169/seals-41949

Nutzungsbedingungen
Die ETH-Bibliothek ist die Anbieterin der digitalisierten Zeitschriften auf E-Periodica. Sie besitzt keine Urheberrechte an den Zeitschriften und ist nicht verantwortlich für deren Inhalte. Die Rechte liegen in der Regel bei den Herausgebern beziehungsweise den externen Rechteinhabern. Das Veröffentlichen von Bildern in Print- und Online-Publikationen sowie auf Social Media-Kanälen oder Webseiten ist nur mit vorheriger Genehmigung der Rechteinhaber erlaubt. Mehr erfahren

Conditions d'utilisation
L'ETH Library est le fournisseur des revues numérisées. Elle ne détient aucun droit d'auteur sur les revues et n'est pas responsable de leur contenu. En règle générale, les droits sont détenus par les éditeurs ou les détenteurs de droits externes. La reproduction d'images dans des publications imprimées ou en ligne ainsi que sur des canaux de médias sociaux ou des sites web n'est autorisée qu'avec l'accord préalable des détenteurs des droits. En savoir plus

Terms of use
The ETH Library is the provider of the digitised journals. It does not own any copyrights to the journals and is not responsible for their content. The rights usually lie with the publishers or the external rights holders. Publishing images in print and online publications, as well as on social media channels or websites, is only permitted with the prior consent of the rights holders. Find out more

Download PDF: 21.11.2025

ETH-Bibliothek Zürich, E-Periodica, https://www.e-periodica.ch

Ultimate Load Capacity of an Iceberg-Loaded Gravity Base Structure

Résistance ultime d'une structure gravitaire soumise aux effets d'icebergs

Grenztragfähigkeit einer Schwergewichtsplattform unter Eisberglast

Charles J. VOS
Prof. in Constr. Techn.
Delft Univ. of Techn.
Delft, The Netherlands

Charles J. Vos was trained in civil engineering at the Universities of Delft (The Netherlands) and Leeds (U.K.). Since 1963 he has been active in the design of heavy civil engineering structures like bridges, quaywalls and concrete offshore structures. Since 1982 he also teaches construction technology of concrete structures at Delft University.

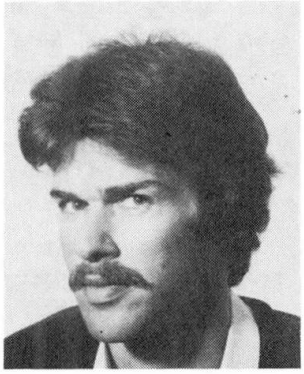

Dick den Hertog, born 1958 obtained his civil engineering degree at the University of Technology, Delft. For one year he participated in the design of steel jackets for the North Sea. Since 1985 he has been in the consulting subsidiary of the HBG and involved in complex and offshore structures.

Dick den HERTOG
Civil Engineer
Delta Marine Consult.
Gouda, The Netherlands

SUMMARY
The peripheral energy-absorbing wall of a concrete fixed oil production platform in an iceberg environment has been analysed. The iceberg energy absorption is achieved by means of triangular projections, which are supported by internal walls. The reinforcement of these projections has been determined by plane frame analysis and a plastic lattice model technique. A non-linear analysis has been executed to determine the ultimate load capacity of a projection. This has been performed with the finite element program package DIANA.

RÉSUMÉ
Le mur périphérique absorbeur d'énergie d'une plateforme fixe en béton pour la production pétrolière, devant résister aux icebergs, a été analysé. L'absorbtion de l'énergie des icebergs est réalisée à l'aide de renforts extérieurs triangulaires, qui sont supportés par des cloisons internes. Le dimensionnement de ces renforts extérieurs a été déterminé à l'aide d'une analyse élastique bidimensionnelle, puis à l'aide d'un modèle de treillis en élasto-plasticité. Une analyse non-linéaire a permis de déterminer la résistance à la rupture d'un renfort extérieur. A cet effet le programme aux éléments finis DIANA a été utilisé.

ZUSAMMENFASSUNG
Die energieverzehrende äussere Wand einer festen Betonplattform für Ölproduktion im Eisberggebiet wurde untersucht. Die Absorption der kinetischen Energie des Eisbergs wird erreicht durch dreieckförmige Vorsprünge auf einer inneren Stützwandkonstruktion. Für die Bemessung wurden die Vorsprünge als ebene Rahmen und als Fachwerk mit plastischem Materialverhalten idealisiert. Eine nichtlineare Berechnung zur Bestimmung der Grenztragfähigkeit der Vorsprünge wurde verwendet. Die Berechnung wurde mit dem FE-Programmpaket DIANA durchgeführt.

1. INTRODUCTION

In 1985 an alternative concrete structure study for a fixed oil production platform in the Hibernia field located on the Grand Banks, 200 miles off Newfoundland, was executed by Grand Banks Constructors on behalf of Petro-Canada Inc. of Calgary. Grand Banks Constructors is a Joint Venture comprising Northern Construction Company Ltd., a subsidiary of Morrison-Knudsen Company Inc., McNamara Construction Ltd., a subsidiary of George Wimpey Canada Ltd., and Delta Marine Consultants a subsidiary of Hollandsche Beton Groep (HBG) from The Netherlands.

In this study, six concepts of a gravity base structure, capable of operating during heavy storms and in an iceberg region, have been designed to a preliminary level. The benefits resulting from the six concepts were evaluated and the most advantageous chosen for conceptual design. The selected concept was further investigated in order to optimize the main parameters e.g. height, diameter etc. The concept development, further lay-out studies and optimizing program resulted in a cylindrical caisson (Fig. 1). The key data of the selected concept are presented in Table 1.

Supported by computer analyses, the most effective shape of the caisson peripheral wall in order to resist iceberg impact forces and to withstand stresses due to hot oil in the storage compartments has been developed. This work resulted in a platform with triangular projections, supported by internal walls, in order to absorb the iceberg energy by crushing of the ice (Fig. 2).

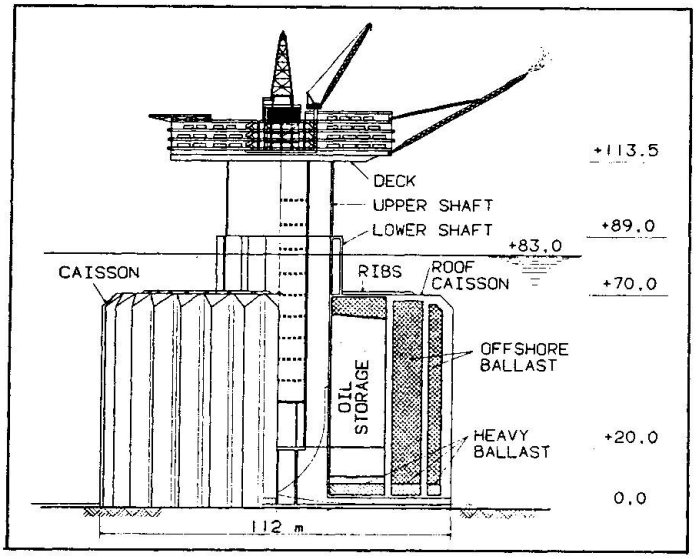

Fig. 1 Selected concept; view and vert. cross section

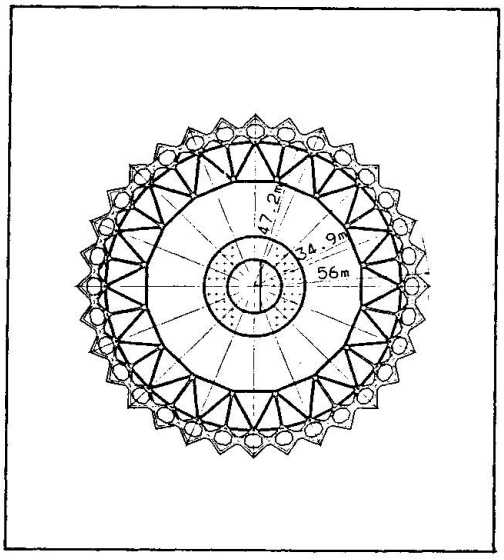

Fig. 2 Horizontal cross section caisson

Table 1 Key data of the selected concept

TOPSIDE FACILITIES			ENVIRONMENTAL FORCES				OIL STORAGE
			ICEBERG		WIND, WAVE & CURRENT		
DRY WEIGHT [TONS]	OPER. WEIGHT [TONS]	DECK WEIGHT [TONS]	SHEAR FORCE [MN]	OVERT. MOMENT [MNm]	SHEAR FORCE [MN]	OVERT. MOMENT [MNm]	[BBLS]
29500	34500	7900	1075	62350	1500	59200	900000

FLOATING STABILITY			BALLAST QUANTITIES		MATERIAL QUANTITIES		
GM IN TOW [m]	DISPLACEMENT IN TOW [m³]	MIN.GM DURING DECK-MATING [m]	DRY WT. HEAVY BALLAST [TONS]	DRY WT. OFF-SHORE BALLAST [TONS]	CONCRETE [m³]	MILD STEEL [TONS]	PRE-STRESS. STEEL [TONS]
9.1	59400	1.8	154000	371000	165000	4000	1350

A separate analysis for the design of the triangular projections has been performed for two main reasons:
- the peripheral wall represents a type of structural concrete member which is poorly covered in theory, codes and practice. It is in fact, in horizontal cross section, a "statically indeterminate, heavily loaded, deep beam".
- the projections represent more than 35 percent of the structural concrete quantity in the platform and a construction period of 16 months on the critical path.

The purpose of this analysis was to reduce the reinforcement in the projections which are exposed to the design ice load and to arrive at recommendations for the most effective shape and size. In order to achieve this, five steps of analysis have been performed successively, representing conventional methods as well as most advanced computer techniques. The five steps of analysis have been summarized in chapter 2.

The paper presented describes the steps of analysis as executed by Delta Marine Consultants, the engineering subsidiary of the HBG in order to determine the reinforcement of the triangular projection and its ultimate load capacity.

2. SUMMARY OF THE STEPS OF ANALYSIS

2.1 Preliminary projection sizing

Due to the shape of the projections, shear deformations cannot be neglected and thus the slender beam theory cannot be used. For this reason, a deep beam theory has to be used.

By application of the lower bound approach in order to determine the load capacity of a deep beam, the so-called "plastic lattice model analysis" has been developed. This technique is used to describe a mechanism of load transfer. The theory about the collapse mechanisms in deep beams has been described in detail [1].

The boundary conditions for a plastic lattice model analysis are:
- a selected static allowable distribution of stresses has to be in equilibrium with the static and kinematic boundary conditions.
- elastic deformations are negligible compared to plastic deformations.
- only compressive stresses are present in the concrete.
- all tensile forces are carried by the steel.
- the steel has an ideal plastic behaviour.
- the ultimate load capacity of the plastic lattice model is achieved when the stresses in one or more of the basic elements equal the allowable compressive stress or the yield stress.
- changes in geometry, which occur prior to collapse of the structure, are neglected. The equilibrium equations can be drawn up for the original dimensions of the structure.

The basic elements in the plastic lattice model are: (Fig. 3)
- compressive struts in the concrete
- tensile elements for (prestressed) steel
- so-called "hydrostatic joints" with bi-axial stress state

By application of the plastic lattice model analysis, the preliminary sizes of the triangular projection have been determined.

2.2 Determination of sizes of the projection supporting walls

In order to determine the load transfer by the triangular projection and the projection supporting walls, a three-dimensional finite element model with 640 elements has been made of half the platform. The center of impact of the ice load is situated 40.7 m above mudline, which results in the highest vertical and horizontal bending stresses (Fig. 4). The magnitude of the load equals F=538 MN (incl. γ_f = 1.3) on half the structure.

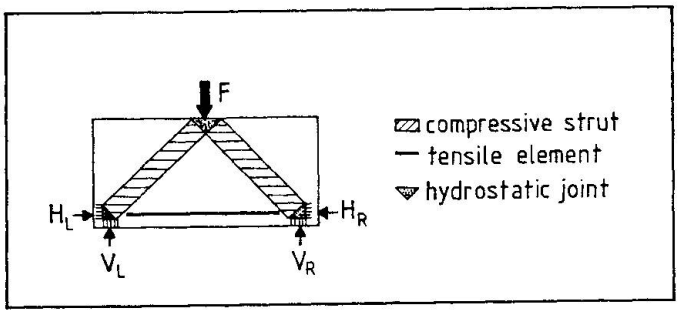

Fig.3 Basic elements plastic lattice model

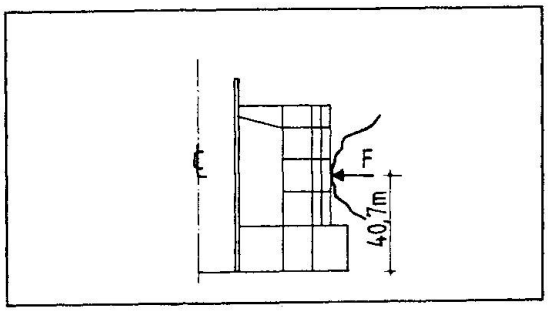

Fig.4 Iceberg load on platform

From the results of the elastic analysis, the sizes of the projection supporting walls have been derived.

2.3 Preliminary design of the projection reinforcement

A two-dimensional model of one triangular projection has been analysed by using plane frame beam elements in order to find the elastic load transfer. With the results of the linear elastic analysis, a final plastic lattice model has been constructed to establish the projection reinforcement under design ice loading of 5.2 MPa.

2.4 Final determination of the projection reinforcement

To check the sizing of the projection, as executed in section 2.3, a finite element analysis with 302 linear elastic elements has been made by using the program package DIANA. This analysis has led to some minor corrections of the reinforcement. For elements with high tensile stresses under design loading, the modulus of elasticity for the concrete has been reduced in accordance with the element reinforcement.

2.5 Determination of ultimate load capacity of the projection

After the analysis with linear elastic elements, the element mesh in the vicinity of the ice load has been refined. This part contains non-linear elastic elements with reinforcement. The ultimate load capacity of the projection has been determined by using the finite element package DIANA-NONLIN. Within this computer program material models with associated parameters have been used as presented in Table 2. For more information regarding this subject, reference is made to [2] and [3].

UNREINFORCED CONCRETE IN TENSION	FRACTURE ENERGY G_f TENSILE STRENGTH f_{ct} CRACKBAND WIDTH h SHEAR RETENTION FACTOR β
REINFORCED CONCRETE IN IN TENSION	TENSION-STIFFENING SHEAR RETENTION FACTOR β
CONCRETE IN COMPRESSION	INTERNAL FRICTION ANGLE φ COHESION c TENSION CUT-OFF CRITERION UNIAXIAL COMPR. STRENGTH f_{cc} YOUNG'S MODULUS E_c
REINFORCING STEEL	YIELD STRESS f_{sy} YOUNG'S MODULUS E_s

Table 2 Parameters for modelling

3. DETERMINATION OF PROJECTION REINFORCEMENT

3.1 Plane frame analysis and plastic lattice model analysis

The triangular projection has been analysed by using the computer program STRESS with plane frame beam elements. The influence of one adjacent projection has been taken into account by defining springs with axial and rotational stiffness at the support points. The ice loading of 4 MPa, present on one side, has been multiplied by a load coefficient γ_f = 1.3 to obtain the design loading of 5.2 MPa [4].

Since ice load on both sides of the projection gives lower bending moments, this load condition has not been analysed in detail. The computer model of the projection, as used for the plane frame analysis, is presented in Fig. 5. The members of the computer model coincide with the centre lines of the triangular projection.

The results of the plane frame analysis with linear elastic load distribution are presented in Fig. 6. By using these results, a plastic lattice model for the main part of the projection has been drawn (Fig. 7).

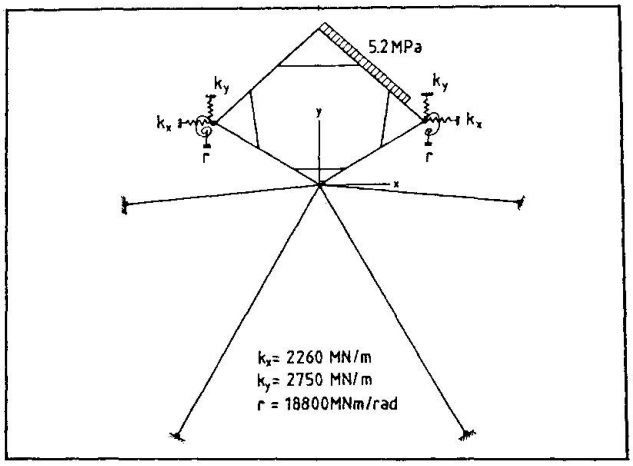

Fig. 5 Plane frame model of projection

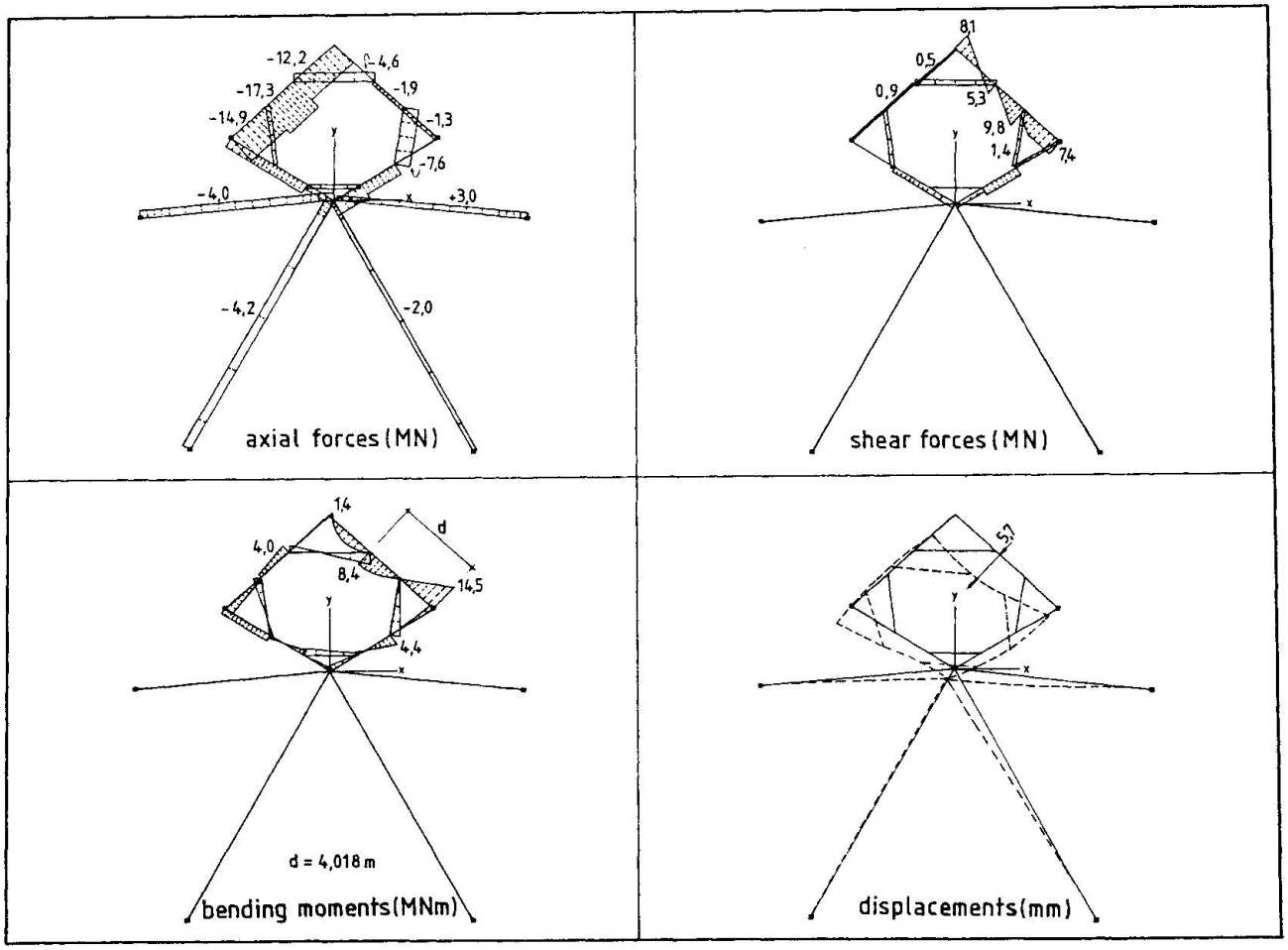

Fig. 6 Results of plane frame analysis

In the struts the allowable compressive strength of concrete f_c has been derived from [4] as follows:

- characteristic cylinder strength f_{ck} = 48 N/mm²
- material coefficient γ_m = 1.4
- maximum resistance against bending moment $f_c = 0.85 * f_{cr}$
  where: $f_{cr} = f_{ck} / \gamma_m$ = 34.3 N/mm²
- maximum resistance against axial force (uniaxial compressive strength)
  $f_c = 0.85 * 0.85 * f_{cr}$ = 24.8 N/mm²

The uniaxial compressive strength of the concrete determines the width of the compressive struts and the tensile elements according the formula:

$w = F/f_c$

where : w = width of strut
F = compression or tension force
f_c = allowable compressive strength of concrete

The force in the tensile element F_t = 6.82 MN represents the tension force in the reinforcement. The required quantity of reinforcement has been derived from:

$A_s = \gamma_m * F_t/f_y$

where : γ_m = material coefficient of steel = 1.15
F_t = force in tensile element
f_y = yield stress of steel = 415 N/mm²

This resulted in reinforcement of 25 mm diameter bars at 100 mm centres (Ø 25-100) and 35 mm diameter bars at 75 mm centres (Ø 35-75) at the inner side of the projection walls.

The reinforcement at the connection point with the adjacent projection has been determined by using the axial force of 5.6 MN (tension) and the bending moment of 16.7 MNm. The required quantity of reinforcement resulted in 35 mm and 40 mm diameter bars at 75 mm centres (Ø 35-75 and Ø 40-75 resp.) at the outer side. Since the compressive struts fit in the concrete structure, shear reinforcement (stirrups) are not compulsory for load transfer. However, to achieve more ductility, a minimum quantity of stirrups has been applied over a 2.4 m length in the walls of the projection. [1]

3.2 Finite element linear elastic analysis

A finite element analysis has been executed by using the program package DIANA. For this analysis three triangular projections with supporting walls have been modelled with 302 linear elastic elements. Eight-noded plane strain elements have been used, with nine integration points. The model has fixed supports in the internal ring whereas the supports in the external ring only have a spring with axial stiffness. In order to simulate the adjacent projection, the support of the projection itself has two springs with axial stiffness and one spring with rotational stiffness (Fig. 8).

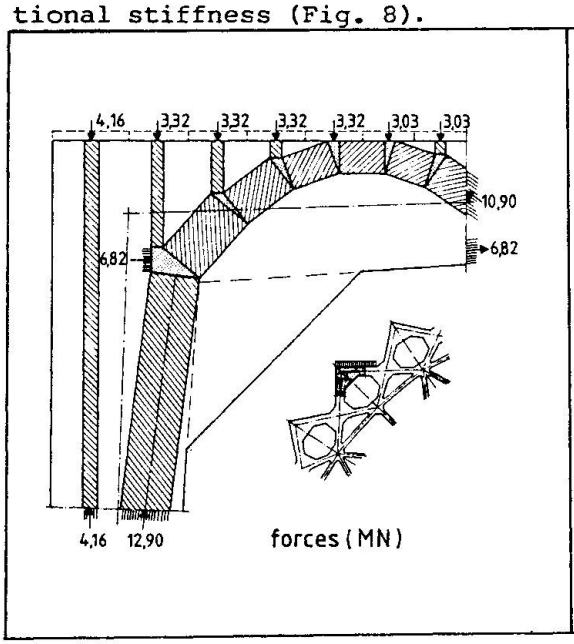

Fig. 7 Plastic lattice model part of triangular projection (load = 5.2 MPa; γ_m = 1.3)

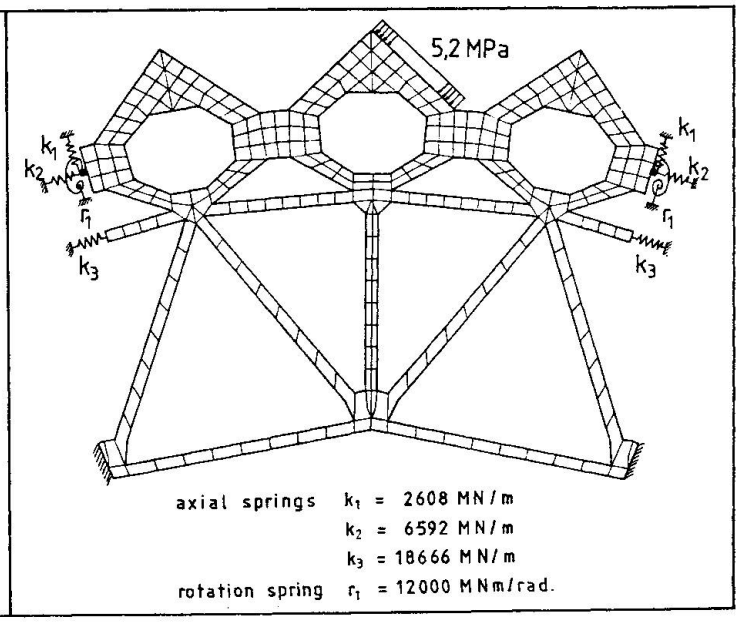

Fig. 8 Finite element model with boundary conditions and design ice loading

Comparison of the results of the linear elastic analysis with those of the plastic lattice model resulted in the following conclusions:

- by taking into account the rotational stiffness of three adjacent triangular projections instead of one, the reinforcement in the connection between the projections is reduced to approx. 70%, whereas the displacement halfway along the loaded projection wall is increased with a factor 2.5
- the tension force in the ice loaded projection wall is approx. 75% of the tension force determined in the plastic lattice model analysis. This proves the statement that the design method, by using a plastic lattice model, is conservative for the determination of the ultimate load capacity of the triangular projection.

By using the results of the plastic lattice model and the finite element analysis, the reinforcement in the projection has been determined (Fig. 9), by taking into account the following considerations:

- in the outer skin of the projection adjacent to the loaded projection wall, a tension force is present which cannot be neglected.
- the reinforcement in the projection is symmetrical.
- for practical reasons 3 different bar diameters and 4 different centre to centre distances have been selected.
- the minimum reinforcement in the projection is Ø 25-100 horizontal and Ø 30-200 vertical.

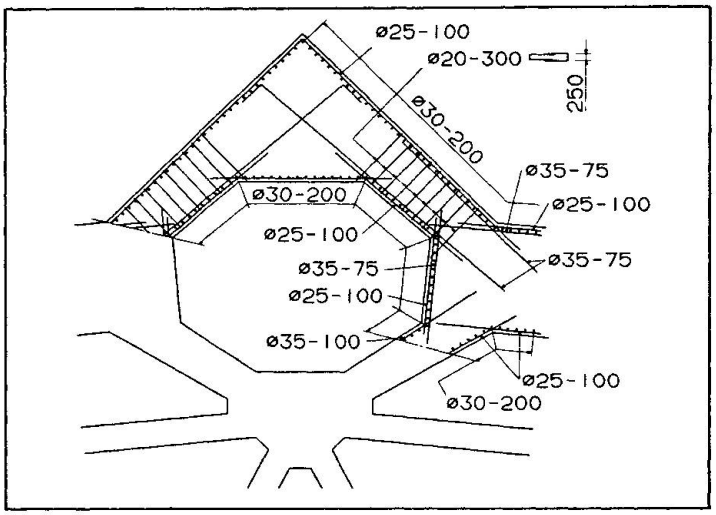

Fig. 9 Reinforcement in projection

4. NON-LINEAR ANALYSIS OF TRIANGULAR PROJECTION

In order to determine the ultimate load capacity of the projection, a fine element mesh of the model in the vicinity of the ice loading has been generated (Fig. 10). The 152 elements of the fine mesh have non-linear elastic behaviour and they contain reinforcing steel, which has been modelled as replacing steel plates with orthogonal properties (Fig. 11).

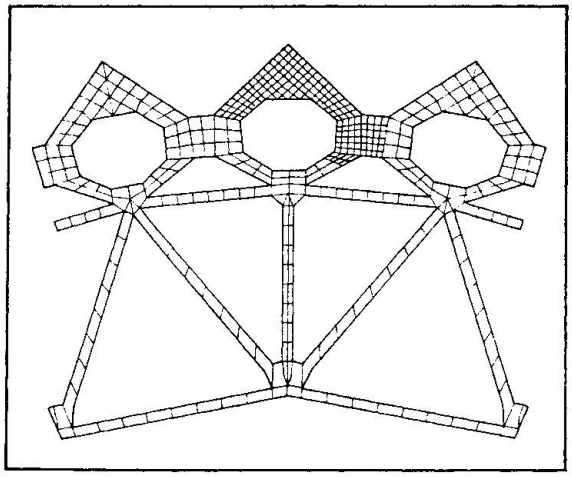

Fig. 10 Computer model for non-linear analysis

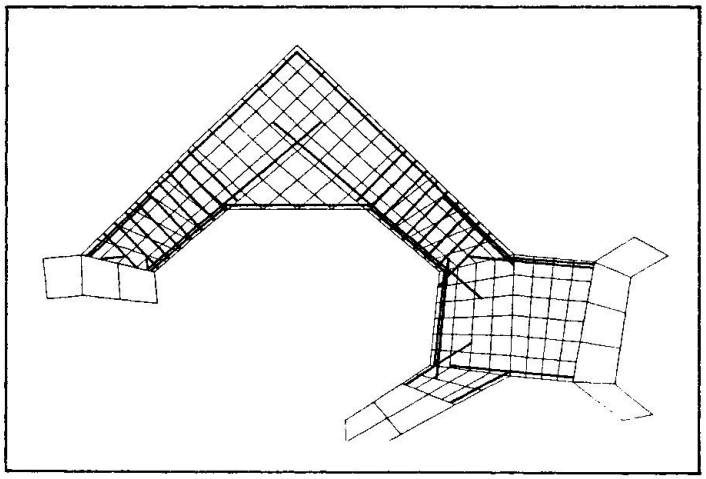

Fig. 11 Element mesh with non-linear elastic elements and reinforcing steel

The anchorage length of the bars has not been modelled. Perfect bond was assumed to exist between steel and concrete. The other concrete elements have elastic material behaviour. The Young's modulus of the concrete for a part of the external ring has been reduced to E_c = 2730 N/mm² according to [4] because the results of the plane frame analysis as well as the results of the linear elastic analysis presented in this part element stresses, which exceed the concrete tensile strength.

The material parameters used in the analysis for the non-linear elastic elements, both for the concrete and the reinforcing steel have been summarized in Table 3.

The non-linear analysis, taking into account aggregate interlock and using the smeared crack approach, has been executed with the finite element program package DIANA-NON-LIN.The non-linear analysis has been performed by incremental, iterative procedures, using load steps of appropriate magnitude. The failure of the triangular projection has been defined to occur if no convergence is achieved after addition of a load increment. The loading on the projection has been increased from 0 MPa to 9.1 MPa by load steps of decreasing magnitude. After a total load of 9.1 MPa no convergence has been achieved for another load step due to start of yielding of the reinforcement at the inner side of the loaded projection wall. This means that the ultimate load capacity of the triangular projection equals 9.1 MPa. The results of the non-linear analysis of the projection are presented for the minimum design ice loading of 5.2 MPa (Fig. 12) and for the ultimate ice loading of 9.1 MPa (Fig. 13).

CONCRETE	E_c = 35000 N/mm² ν = 0.2 f_{cc} = 48 N/mm² f_{ct} = 4.8 N/mm² TENSION CUT-OFF CRITERION I ε_{us} = 0.00198 β = 0.20 φ = 30° c = 13.86 N/mm²
REINFORCING STEEL	E_s = 210000 N/mm² f_{sy} = 415 N/mm²

Table 3 Material parameters non-linear elastic elements.

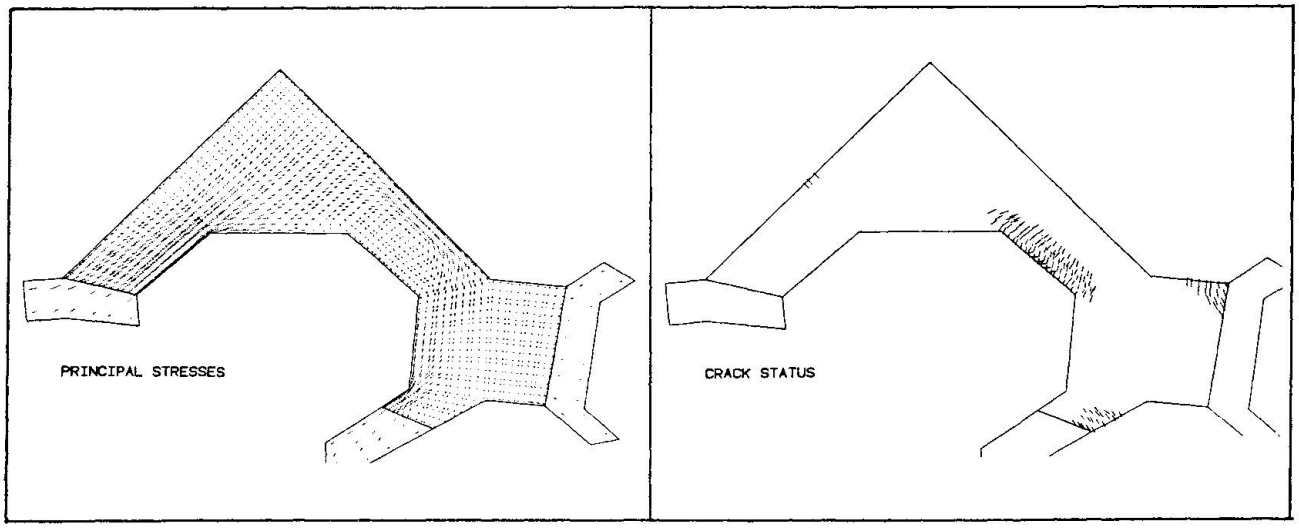

Fig. 12 Results after minimum design ice loading (5.2 MPa)

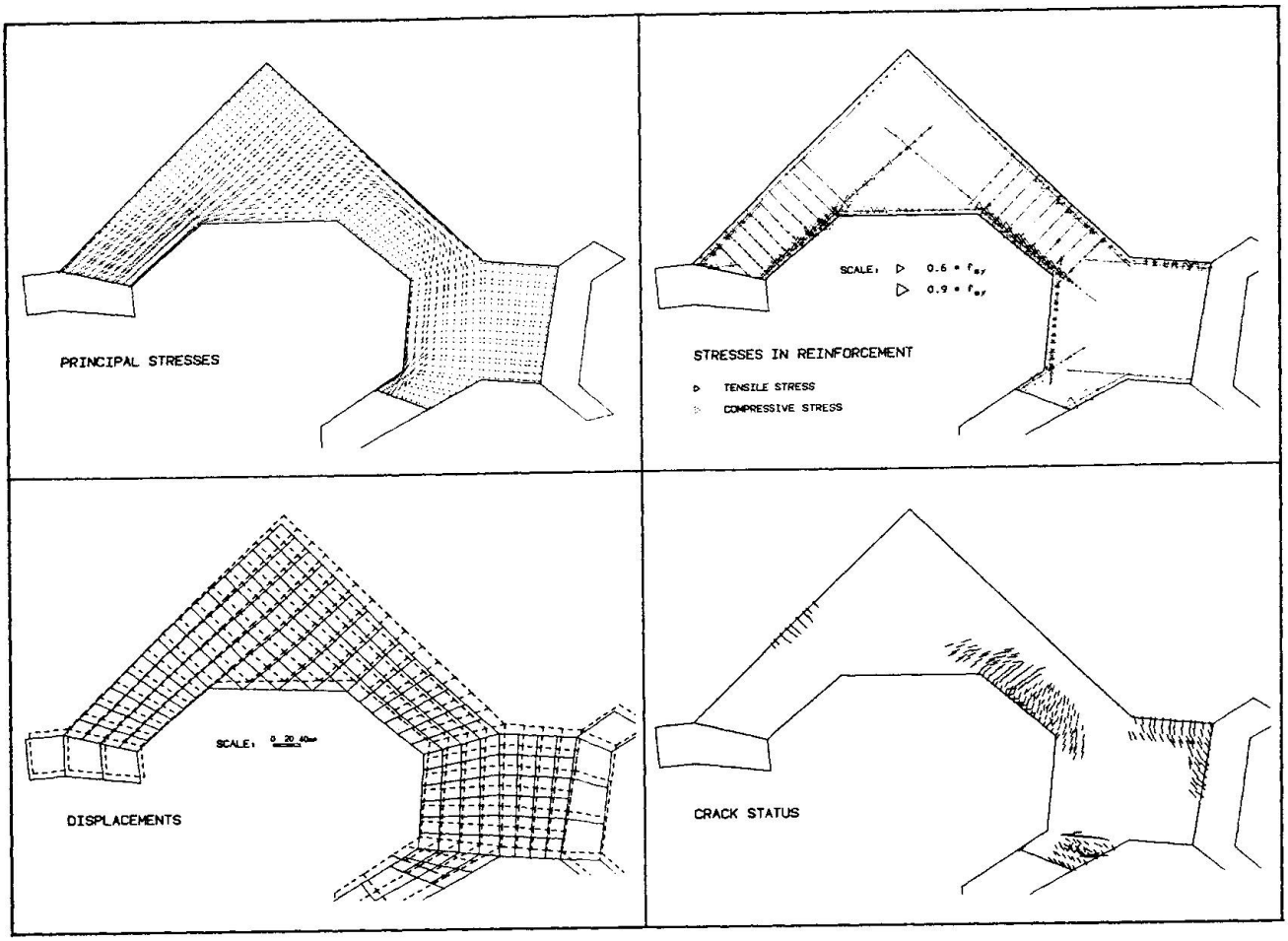

Fig. 13 Results after ultimate ice loading (9.1 MPa)

5. DISCUSSION OF RESULTS

The ultimate ice loading, equal to 9.1 MPa as computed in the non-linear elastic analysis, represents a load coefficient γ_f = 2.28 on the ice crushing strength of 4 MPa. This exceeds the minimum required load coefficient γ_f = 1.3 with a factor m = 1.75. Although the plastic lattice model analysis is a lower bound approach for the ultimate load capacity of a structure, it is preferred to predict the ultimate load capacity of a structure as accurately as possible. However, other studies on behaviour of deep beams have demonstrated that the ratio between predicted load capacity by using the plastic lattice model analysis and load at failure as found in laboratory model tests varies considerably [5].

In order to explain the above mentioned factor m two items have been further investigated:
- the magnitude of the material coefficient of concrete
- the influence of the plane frame model on the tensile force in the inner side of the wall and the lay-out of the compressive struts.

5.1 Material coefficient of concrete

In order to determine the required projection reinforcement by using the plastic lattice model analysis, the ice crushing strength of 4 MPa has been multiplied by a load coefficient γ_f = 1.3. The allowable compressive strength in the concrete struts f_c = 24.8 N/mm² has been calculated by taking into account a material coefficient γ_m = 1.4. This resulted into a force in the tensile element of 6.82 MN, which resulted in reinforcement of Ø 35-75 and Ø 25-100.

In the non-linear analysis of the triangular projection, the uniaxial compressive strength of the concrete f_{cc} has been taken equal to the characteristic cylinder strength, without taking into account a material coefficient. To check the influence of the material coefficient on the required reinforcement in the projection, as determined by application of the plastic lattice model analysis, a model has been drawn for $\gamma_f = 1.3$ and $\gamma_m = 1.0$ (Fig. 14). This means that in the concrete struts the allowable compressive strength equals $f_c = 34.7$ N/mm². From the plastic lattice model it can be derived that the tensile force in the reinforcing steel has been reduced with approx. 10% to 6.10 MN. This means that, by using the same material coefficient γ_m for concrete in the plastic lattice analysis model and in the non-linear analysis, the factor m will be reduced to approx. 1.58.

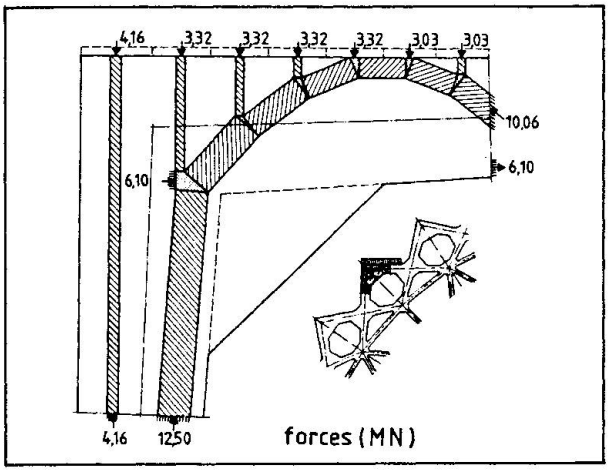

Fig. 14 Plastic lattice model part of triangular projection (load = 5.2 MPa, $\gamma_m = 1$)

5.2 Plane frame model of projection

Comparison of the compressive struts in the plastic lattice model as presented in Fig. 7 with the principal stresses as presented in Fig. 12, shows that the maximum bending moment in the loaded projection wall is achieved in different locations. This is probably an explanation for the high load capacity of the triangular projection as found in the non-linear analysis. In order to get the direction of the compressive struts in the plastic lattice model similar to the direction of the principal stresses, two other plane frame models of the projection have been made. For these computer models, the distance d of the maximum bending moment to the connection joint and the tension force F_t in the tensile element of the loaded projection wall have been determined (Fig. 15).

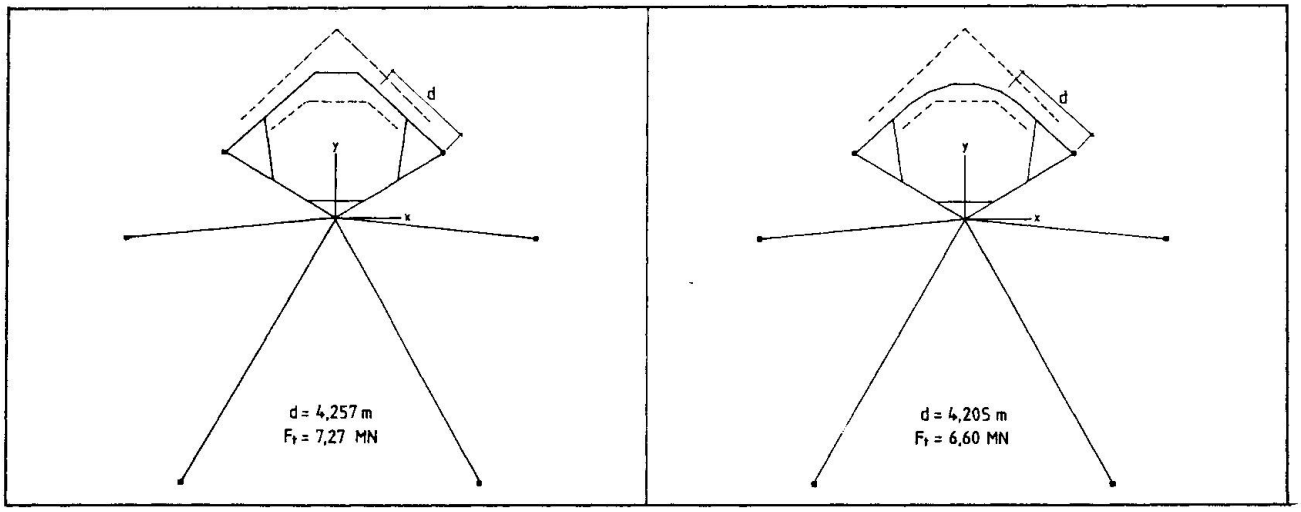

Fig. 15 Alternatives plane frame model of triangular projection

By comparing the results as presented in Fig. 15 with the plane frame analysis as described in section 3.1, it is demonstrated that the direction of the compressive struts in the loaded projection wall is hardly dependant on the plane frame model of the projection, and it is still different from the direction of the principal stresses as found in the non-linear analysis. The differences of the force F_t in the tensile element for both alternatives are well within 10% of the value $F_t = 6.82$ MN, as found in section 3.1.

5.3 Internal shape of the projection

From the direction of the principal stresses as presented in figures 12 and 13, it is clear that the internal corners of the triangular projection cause stress concentrations, which are critical for failure if compressive stresses are not present in all directions. In order to avoid spots with stress concentrations, it is recommended to re-shape the internal of the projection (Fig. 16).

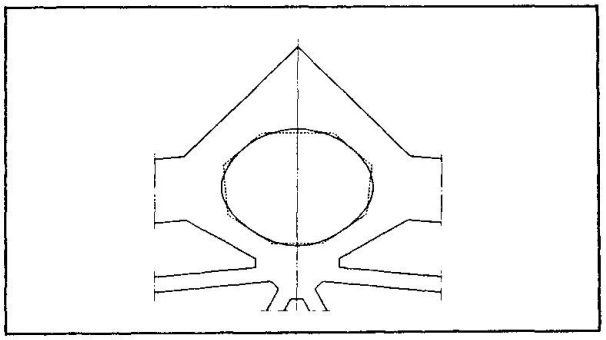

Fig. 16 Recommended shape of projection internal

6. CONCLUSIONS

With regard to the determination of the required reinforcement in the triangular projection of the peripheral wall of an iceberg resistant offshore structure and with regard to the determination of its ultimate load capacity, as presented in this paper, the following conclusions have been drawn:

- The modelling of the triangular projection for the plane frame analysis has little influence on the direction of the compressive struts and the required quantity of reinforcement as determined in the plastic lattice model analysis.
- The sizing of the projection by using the plastic lattice model technique is conservative for the determination of the ultimate load capacity of the projection, which exceeds the design load with a factor 1.58.
- As the concrete compressive struts fit in the projection walls, as presented in the plastic lattice model analysis, shear reinforcement (stirrups) is not necessary. This has been proved in the non-linear analysis. However, to achieve ductility of the structure it is recommended to apply the minimum quantity of stirrups in the projection walls.
- The failure of the triangular projection is induced by yielding of the reinforcing steel at the inner side of the loaded projection wall.

REFERENCES

1. CEB-FIP Model Code for concrete structures. Bulletin d'information Nos. 146 and 150/1982.
2. MIER J.G.M. van et al., Examples of Non-Linear Analysis of Reinforced Concrete Structures with DIANA-NONLIN, September 1986.
3. ROTS J.G., NAUTA P., KUSTERS G.M.A and BLAAUWENDRAAD J., Smeared crack approach and fracture localization in concrete. HERON Vol. 30, 1985.
4. DnV Rules for the design, construction and inspection of offshore structures. Reprint, 1981.
5. ROGOWSKI D.M., MACGREGOR J.G., Shear strength of deep reinforced concrete continuous beams. Structural Engineering Report no. 110. Department of Civil Engineering University of Alberta, Edmonton, Canada.

Leere Seite
Blank page
Page vide