Zeitschrift: IABSE reports = Rapports AIPC = IVBH Berichte
Band: 51 (1986)

Artikel: Safety of compressed stiffened panels with initial imperfections
Autor: Streletsky, N.N. / Korchak, M.D. / Dankov, V.S.
DOI: https://doi.org/10.5169/seals-39583

Nutzungsbedingungen
Die ETH-Bibliothek ist die Anbieterin der digitalisierten Zeitschriften auf E-Periodica. Sie besitzt keine Urheberrechte an den Zeitschriften und ist nicht verantwortlich für deren Inhalte. Die Rechte liegen in der Regel bei den Herausgebern beziehungsweise den externen Rechteinhabern. Das Veröffentlichen von Bildern in Print- und Online-Publikationen sowie auf Social Media-Kanälen oder Webseiten ist nur mit vorheriger Genehmigung der Rechteinhaber erlaubt. Mehr erfahren

Conditions d'utilisation
L'ETH Library est le fournisseur des revues numérisées. Elle ne détient aucun droit d'auteur sur les revues et n'est pas responsable de leur contenu. En règle générale, les droits sont détenus par les éditeurs ou les détenteurs de droits externes. La reproduction d'images dans des publications imprimées ou en ligne ainsi que sur des canaux de médias sociaux ou des sites web n'est autorisée qu'avec l'accord préalable des détenteurs des droits. En savoir plus

Terms of use
The ETH Library is the provider of the digitised journals. It does not own any copyrights to the journals and is not responsible for their content. The rights usually lie with the publishers or the external rights holders. Publishing images in print and online publications, as well as on social media channels or websites, is only permitted with the prior consent of the rights holders. Find out more

Download PDF: 26.12.2025

ETH-Bibliothek Zürich, E-Periodica, https://www.e-periodica.ch

Safety of Compressed Stiffened Panels with Initial Imperfections

Sécurité à la compression de plaques nervurées présentant des imperfections

Sicherheit gedrückter Rippenplatten mit Ausführungs-Ungenauigkeiten

N.N. STRELETSKY
Professor
TSNII Proektstalkonstruct.
Moscow, USSR

N.N. Streletsky was born in 1921. In 1947 he graduated from the Moscow Institute of Civil Engineering. He is specialist in metal bridges, steel and reinforced concrete structures and limit states theory. He is head of the department of engineering structures.

M.D. KORCHAK
Cand. Sc. (Eng.)
Moscow Inst. Steel & Alloys
Moscow, USSR

M.D. Korchak was born in 1941. In 1969 he graduated from the Kharkov Institute of Civil Engineering. He is specialist in the field of stability and safety of metal structures.

V.S. DANKOV
Cand. Sc. (Eng.)
TSNII Proektstalkonstruct.
Moscow, USSR

V.S. Dankov was born in 1944. In 1966 he graduated from the Moscow Automobile Road Institute. He is specialist in metal bridges and structures and senior research scientist of the engineering structures department.

SUMMARY
Some practical recommendations on the correction of tolerances for initial imperfections of compressed stiffened panels, based on the analysis of their behaviour with regard to interaction of buckling forms, are given. It is shown, that all tolerances should be made dependent on the stiffness relationship of the panel constituent elements.

RÉSUMÉ
L'article présente des recommandations pratiques pour la correction d'imperfections initiales dans des plaques nervurées en compression. Elles se basent sur l'étude du comportement des plaques sous l'effet du voilement. Il est montré que les tolérances devraient être exprimées par rapport aux rigidités des éléments isolés d'une plaque.

ZUSAMMENFASSUNG
Der Beitrag enthält Empfehlungen zur Festlegung geometrischer Ausführungs-Toleranzen für unter Längsdruck stehende Rippenplatten. Diese Empfehlungen stützen sich auf die rechnerische Ermittlung des Verhaltens solcher Bauteile unter Einbezug der Beulformen. Es wird gezeigt, dass die Toleranzen von den Steifigkeitsverhältnissen der die Rippenplatte bildenden Teile abhängig gemacht werden sollten.

Steel stiffened panels are used as lower orthotropic plates (bottom chords) of box-shaped continuous bridge superstructures. At the stage of erection and, in the vicinity of intermediate supports, at the stage of performance such steel stiffened panels work intensively in compression. Buckling of such panels is the reason for some bridges failures. That's why the need for the most economical solutions of the panels safety improvement is very actual.

Loadbearing capacity and safety of a compressed stiffened plate depends on accidental initial imperfections and, first of all, on geometrical imperfections of the plate as a whole and its elements. Thus, the improvement of the safety should be realized through scientifically confirmed application and reasonable keeping to the tolerances (geometrical imperfections limiting values) on steel stiffened plates fabrication.

Let's consider, as an example, the panel of the compressed stiffened plate with longitudinal stiffeners (Fig. 1), where L is the panel length, the transverse girders, restraining of the panel are assumed to be absolutely rigid, "a" is the distance between the longitudinal stiffeners. Compressive stresses in the plate are assumed to be uniformly distributed over its area.

The panel considered is characterized by the following three forms of buckling under compression: overall buckling of the plate with its vertical geometrical imperfections at displacement LQ_1, local buckling of the longitudinal stiffeners with lateral geometrical imperfections of the stiffener upper edge at displacement LQ_2; local buckling of the bridge elements between the longitudinal stiffeners.

The design often considers an ideal plate structure without initial imperfections, for which the critical stress of the overall buckling is equal to σ_E, the critical stress of local buckling of the longitudinal stiffener is equal to σ_S and the critical stress of the local buckling of the plate parts between the longitudinal stiffeners is equal to σ_L. For the analysis of various real plates the relationships $x_1 = \sigma_E / \sigma_S$ and $x_2 = \sigma_E / \sigma_S$ of critical stresses for an ideal plate are used. For an equistable ideal plate $x_1 = 1$ and $x_2 = 1$. A real plate with initial imperfections may exibit an abrupt failure at stresses considerably lower than critical stresses of an ideal plate. The results of investigations /1-5/ showed, that the interaction of various buckling forms for real plates was a complex process and for reduction of the panel sensitivity to imperfections there should be $x_1 < 1$ and $x_2 > 1$, i.e. for the critical stresses of the corresponding ideal plate the unequalities $\sigma_S > \sigma_E > \sigma_L$ are desirable.

It was shown /3, 5/, that the local buckling of the plate may be considered to be insignificant. That's why, we consider only the interaction of the vertical relative imperfections of the panel as a whole, ε_1, and the horizontal relative imperfections of the upper edge of the longitudinal stiffener, ε_2. The relative imperfections are found in relation to the length L.

The problem is to be solved with the theory of disasters /6/. The advantage of the most complete presentation of a real structure with a large number of degrees of freedom by a model with two degrees of freedom was used. The steel behaviour is assumed to be elastic.

Let's consider the panel element with a width "a" with initial geometrical imperfections ε_1 and ε_2. Let's introduce the characteristics of stiffness: stiffness in an axial force $K_1=EA$; stiffness in bending $K_2 = EJ$; a structural parameter $\kappa=k_2/k_1L^2$. Here A is a cross sectional area of the plate with a width "a"; J - is a moment of inertia of a longitudinal stiffener. $\lambda=\frac{P}{EA}$ is a non-dimensional parameter of the loading, where P is a compression load of the plate part considered.

By modifying the system potential energy according to the displacement parameters and taking the independence ε_1 and ε_2 from each other, in contrary to / 6 /, we obtain the following equilibrium equations:

$$\lambda Q_1\left[\frac{1}{2}+\frac{1}{4}(Q_1^2+Q_2)\right]-\alpha\sqrt{2}\left[\frac{1}{32}Q_1(8-6Q_1+5Q_1^2+6Q_2^2)-\frac{1}{2}-\frac{1}{8}Q_2\right]-1=0 \qquad (1)$$

$$\lambda Q_2\left(\frac{1}{4}+\frac{1}{8}Q_1^2+\frac{1}{8}Q_2^2\right)-\kappa\left[Q_2-\varepsilon_2+\frac{1}{3}(Q_2-\varepsilon_2)^3\right]-$$
$$-0{,}885\,\alpha Q_2(8-4Q_1+2Q_2^2+3Q_1^2)+Q_2=0\,, \qquad (2)$$

where $\alpha=\left[(1+\varepsilon_1)^2+(1-\varepsilon_1^2-\varepsilon_1^2)\right]^{\frac{1}{2}}$

By substituting the values ε_1, ε_2 and K into the equations (1) and (2), we obtain the systems of equations with two unknown values - a vertical relative displacement Q_1 and a horizontal relative displacement Q_2. Solving these systems of equations, we get the relationships of Q_1 and Q_2 to the load λ at definite values ε_1, ε_2 and K. The plots for these relationships are given in Fig. 2 and 3.

The curve 1 in Fig. 2 represents the ideal panel ($\varepsilon_1 = \varepsilon_2 = 0$) which buckles from the panel plane in the elastic stage. The curves 2, 4 and 6 in Fig. 2 represent the panels with imperfections of only one type, i. e. overall imperfections $\varepsilon_1 = 0{,}03$ and, correspondingly, the displacements $Q_2= 0$. The curves in Fig. 3 represent the panels with imperfections of the longitudinal stiffeners $\varepsilon_2= 0{,}03$ at $\varepsilon_1= 0$ and, correspondingly, at displacements $Q_1 = 0$. The dotted parts of the curve 6 in Fig. 2 correspond to the unstable conditions of the structure.

The dot-and-dash lines 4, 5 and 7 in Fig. 2 correspond to the simultaneous presence of both types of initial imperfections and $\varepsilon_1 = \varepsilon_2 = 0{,}03$. In these panels, increasing of the load parameter λ leads to simultaneous development of relative displacements Q_1 and Q_2. The analysis showed, that in the cases investigated the maximum value of the panel loadbearing capacity was reached at $Q_2\approx 0.2$. The plots are given for three values of the structural parameter K = 0,3; 0,5 and 1,0. The structural parameter K = 0,3 corresponds to the panels with very weak stiffeners; at the further decreasing of K, such a panel turns into a plate. The structural parameter K = 1 corresponds to the panel with a very strong stiffening set, at further increasing of this parameter such a panel turns into a rigid compressed bar.

Comparison of the curves 2, 3 and 6 with the curve 1 in Fig. 2 shows, that the weaker the reinforcement, the greater the degree

of the panel loadbearing capacity reduction and deformation capacity improvement, when compared with an ideal panel, which is quite natural.

It is interesting to note, that quite a weak initial imperfection of the longitudinal stiffener ($\varepsilon_2 = 0{,}03$) at $K = 0{,}5$, i. e. at a common reinforcement, leads to the reduction of the ultimate load λ from 1,46 to 0,7 (the curve 8 with its maximum in the point A and the curve 2 in Fig. 3), however, at weak stiffeners ($K = 0{,}3$) this negative effect is even more pronounced (see curves 4 and 3).

The combined influence of the two imperfections ε_1 and ε_2 is also the more pronounced, the weaker are the stiffeners. It follows from the comparison of curves 4,5 and 7 with the respective curves 2, 3 and 6 in Fig. 2.

The results of our calculations, given in Fig. 2 and 3 are similar to the results of other investigations /1-6/, performed with different methods. The conformity of the results helps to distinguish a common characteristic: the loadbearing capacity of the stiffened plates is considerably influenced by the relationship of the panel constituent elements stiffness values and the panel as a whole and there exists such a range of such relationships ($K>0{,}5$), in which the negative influence of the inevitable in practice initial imperfections is very insignificant. This offers considerable scope for improvement of safety and efficiency of compressed stiffened panels through fabrication tolerances refinement, which keep under control the largest admissible geometrical imperfections /7, 8/.

Nowadays, the fabrication tolerances depend only on geometrical sizes of a separate element or a panel as a whole. It would be sound practice to establish the tolerances as a function of relations of the stiffness values of the structure constituent elements, which would be influenced by the structure designation and its performance conditions and may be characterized by the above mentioned parameters $x_1 = \sigma_E / \sigma_S$ and $x_2 = \sigma_E / \sigma_L$, i. e. by the relationships of critical stresses in a ideal plate. This permits to make fabrication tolerances in some cases not so severe.

Below, some recommendations on tolerances establishment on overall initial geometrical imperfections of the plate Δ_1, imperfections in a separate stiffener Δ_2 and imperfections in the plate part between the stiffeners Δ_3 are given.

The tolerances Δ_1 should depend on the parameter x_1. The plates with thin stiffeners ($x_1 > 1$) require maintaining of the tolerance $\Delta_1 = 1/750$. At strong longitudinal ribs ($x_1 < 1$) the tolerance Δ_1 may be increased to 1/500. This preferential tolerance may be used for weaker stiffeners ($x_1 = 1 - 1{,}5$) on condition of introducing a more severe tolerance Δ_2 on bending of longitudinal stiffeners (which is difficult to realize in practice), or by using rigid in the lateral direction longitudinal stiffeners instead of flat ones.

As to the tolerances on the longitudinal stiffeners bending, Δ_2, two ways are possible: (1) a definite reduction of stiffeners rigidity within the limits of $x_1 = 1{,}0-2{,}0$ at maintaining strict tolerances Δ_2 of about 1/500; or (2) making stiffeners sufficiently rigid ($x_1 \simeq 1$) with a slight reduction of restrictions of

Δ_2 to 1/400.

It is possible to reduce the influence of local imperfections of the plate between the stiffeners by decreasing its thickness within the limits admitted by the fabrication and performance conditions. It is known, that in flexible plates the postcritical reserve of the strength may compensate for the imperfections influence. In case a thick plate (x_2 = 0,9 - 1,0) is required by the performance conditions, then the tolerance Δ_3 should be limited by the value about 1/200, because the initial geometrical imperfections in the rigid plates are not desirable.

In the other cases ($x_2 > 1$) the initial imperfections at the level Δ_3 = 1/100 may be considered to be insignificant.

The given recommendations on the tolerances Δ_2 and Δ_3 application are comparable to the actual values of initial geometrical imperfections in the stiffened plates. Thus, in Checkoslovakia and West Germany the value ε_2, obtained as a result of 243 measurements for 5 bridges, varies within the limits 1/953 - 1/243 at an average value ε_2 = 1/330, the value ε_3, obtained as a result of 1620 measurements, varies from 1/359 to 1/90 at an average value ε_2 = 1/109. As a rule the values ε_2 and ε_3 are higher than those admitted by the Specifications of many countries. So, the Specifications of such countries as Belgium, West Germany and Great Britain admit the value Δ_2 = 1/500, in the USSR this value is equal to 1/400, as to the value of the tolerances Δ_3, it is specified as 1/250 in Belgium and West Germany and 1/200 in Great Britain, the tolerance Δ_1 is 1/750 according to the USSR Specifications.

The above described approach to the problem of safety of compressed stiffened panels of box-shaped bridge superstructures and similar structures permits within the limits of not very severe tolerances to fabricate safe in operation structures of box section beams by means of the plate and its stiffeners rigidity control. Besides, an opportunity is obtained to estimate quite precisely the loadbearing capacity of the as-fabicated structures and those in performance, in which the real level of initial imperfections is above the admissible one.

REFERENCES

1. Ivergaard V. Imperfection sensitivity of a wide integrally stiffened panel under compression. Int. J. Solid and Structures, 9, 1973, p. 177.
2. Ellinas C.P., Croll T.G. The basis of a design approach for stiffened plates stability problems in Eng. Structures and Computers. London, 1978, pp. 401-421.
3. Маневич А.И. К теории связанной потери устойчивости подкрепленных тонкостенных конструкций. Прикладная математика и механика, 1982, вып.2.
4. Теребушко О.И., Адуевский А.В. Устойчивость и закритическая деформация подкрепленных панелей с начальными напряжениями. Строительная механика и расчет сооружений, 1985, № 2,с.39-42.

5. Sridharan S. Doubly symmetric interactive buckling of plate structures. Int. J. Solids and Structures, 1983, V. 19, No. 7, pp. 625-641.

6. Niwa Y., Watanabe E., Nakagawa N. Catastrophe and imperfection sensitivity of two-degree-of-freedom system. Proc. ASCE, 1981, No. 307, pp. 99-111.

7. СНиП Ш-I8-75. Металлические конструкции. М.,Стройиздат,I976.

8. Dowling P.T., Frieze P.A., Harding T.E. Imperfection sensitivity of steel plates under complex edge loading. Stability of steel structures. Liege, 1977, pp. 305-314.

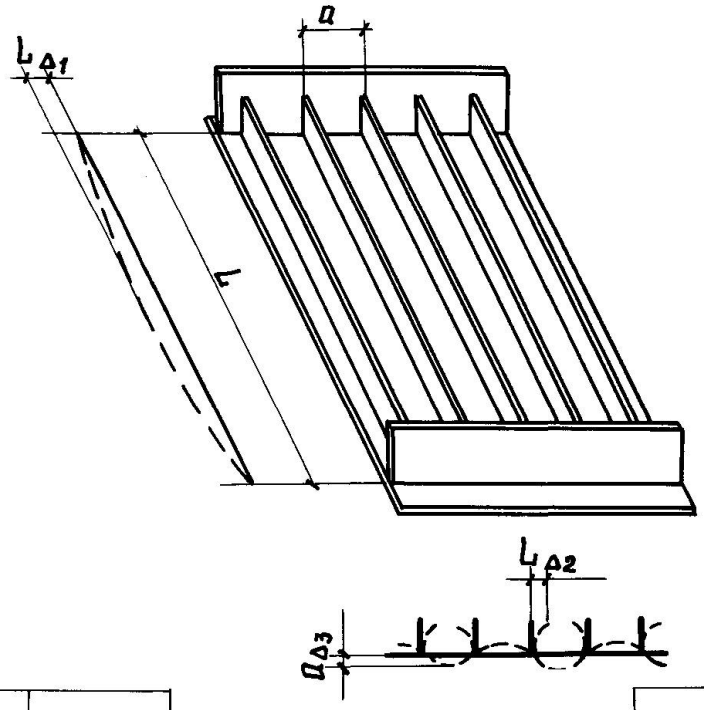

Fig.1

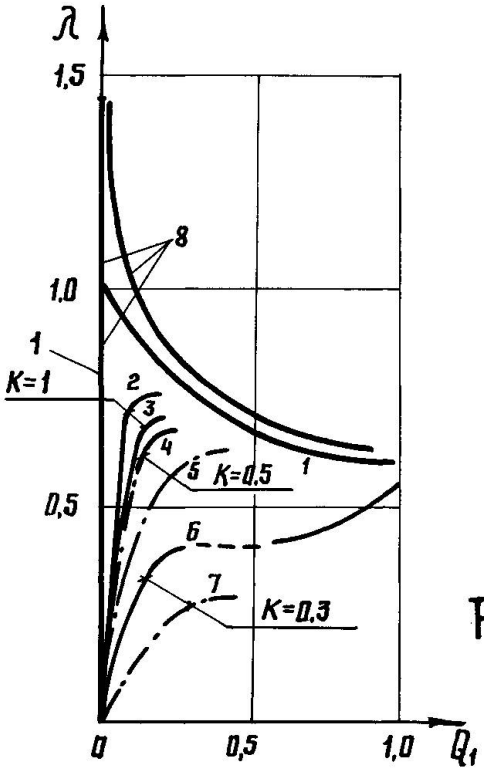

Fig.2
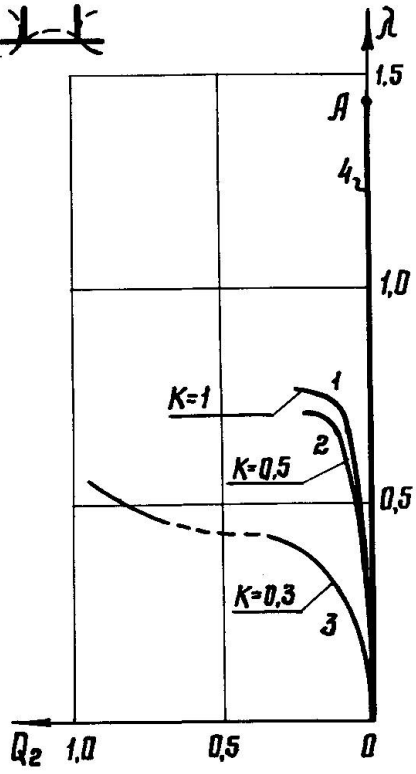
Fig.3