Zeitschrift: IABSE reports = Rapports AIPC = IVBH Berichte
Band: 42 (1983)

Artikel: Floating pier protections anchored by prestressing tendons
Autor: Mondorf, P.E.
DOI: https://doi.org/10.5169/seals-32438

Nutzungsbedingungen
Die ETH-Bibliothek ist die Anbieterin der digitalisierten Zeitschriften auf E-Periodica. Sie besitzt keine Urheberrechte an den Zeitschriften und ist nicht verantwortlich für deren Inhalte. Die Rechte liegen in der Regel bei den Herausgebern beziehungsweise den externen Rechteinhabern. Das Veröffentlichen von Bildern in Print- und Online-Publikationen sowie auf Social Media-Kanälen oder Webseiten ist nur mit vorheriger Genehmigung der Rechteinhaber erlaubt. Mehr erfahren

Conditions d'utilisation
L'ETH Library est le fournisseur des revues numérisées. Elle ne détient aucun droit d'auteur sur les revues et n'est pas responsable de leur contenu. En règle générale, les droits sont détenus par les éditeurs ou les détenteurs de droits externes. La reproduction d'images dans des publications imprimées ou en ligne ainsi que sur des canaux de médias sociaux ou des sites web n'est autorisée qu'avec l'accord préalable des détenteurs des droits. En savoir plus

Terms of use
The ETH Library is the provider of the digitised journals. It does not own any copyrights to the journals and is not responsible for their content. The rights usually lie with the publishers or the external rights holders. Publishing images in print and online publications, as well as on social media channels or websites, is only permitted with the prior consent of the rights holders. Find out more

Download PDF: 23.11.2025

ETH-Bibliothek Zürich, E-Periodica, https://www.e-periodica.ch

Floating Pier Protections Anchored by Prestressing Tendons

Protections flottantes de piles de ponts ancrées par câbles

Kabelverankerte schwimmende Schutzsysteme für Brückenpfeiler

P. E. MONDORF
Chief Engineer M.Sc.
Freyssinet International
Paris, France

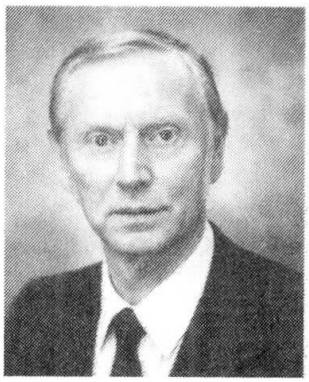

Paul Mondorf, graduated 1953 from DTH, Technical University of Denmark. For several years he was with Cowiconsult, Consulting Engineers, mainly in bridge design and supervision, for five years with DTH, Structural Research Laboratory, now with Freyssinet, has been involved in off-shore and nuclear works, at present in Research and Development.

SUMMARY
The paper deals with the concept of floating systems for protection of bridge piers against ship impact. The lay-out of such systems and their basic components are analysed with particular attention to the cables, for which high durability is essential. The kinetic energy of the off-course vessel is absorbed mainly through extension of cables and heaving of counterweights. The application of such systems to a particular case is shown.

RÉSUMÉ
L'article traite la conception de systèmes flottants pour protéger des piles de ponts contre l'impact de navires. L'arrangement d'une telle protection et ses éléments constitutifs sont analysés, spécialement les câbles pour lesquels une solution à haute durabilité est proposée. L'énergie cinétique du navire est absorbée principalement par l'allongement de câbles et par le levage de poids. L'application d'un tel système à un cas concret est esquissé.

ZUSAMMENFASSUNG
Der Artikel behandelt das Konzept schwimmender Schutzeinrichtungen von Brückenpfeilern gegen Schiffsanprall. Die Auslage und die Hauptkomponenten eines solchen Schutzsystems werden untersucht, besonders die Kabel, für welche ein Typ von zuverlässiger Dauerfestigkeit vorgeschlagen wird. Die kinetische Energie des Schiffes wird hauptsächlich durch Kabelverlängerung und Schwerkörperhebung umgesetzt. Die Anwendung eines solchen Systemes an einem konkreten Fall wird gezeigt.

1. INTRODUCTION

The increasing tendency to build bridges over navigable waters combined with a trend towards larger ship sizes has focussed the attention of bridge owners and designers, shippers and navigators on the risk of collision between ships and bridge structures. A number of major events has clearly shown that the risk is a substantial one which may lead to severe damage when accidents occur.

A comprehensive survey carried out in the mid-sixties listed a considerable number of accidents [1] which has been steadily growing since [2] . The seriousness of the problem is illustrated by such recent exemples as the TJORN bridge (S), which was hit on 1980.01.18 by a 15,000 t freighter, causing the loss of 8 lives and the collapse of the 278 m steel arch main spain, and the SUNSHINE SKYWAY bridge over TAMPA BAY (USA), hit on 1980.02.09 by a 20,000 t freighter, killing 33 persons and causing the loss of the three central span steel lattice girder. The most frequent reasons for the collisions are human error, mechanical failure and bad weather.

An important lesson from actual collisions is that the risk concerns not only the piers adjacent to the navigation spans but all the piers in sufficiently deep waters, as off-course vessels may hit anywhere.

An international enquiry undertaken in the late seventies [2] showed that in several countries, the concerned parties were seeking means to reduce the potential collision risk.

The traditional ways of reducing the risk have been to increase span lengths and/or to introduce navigational restrictions, both of which are of limited value.

In many cases, the design criteria have prescribed that the piers should be designed to sustain collision load, generally from smaller and medium size vessels drifting at moderate speed, whereas more violent collisions are left unconsidered as to costly to be covered.

Other approaches have consisted in protecting the piers by means of fenders dolphins, cofferdams or artificial islands.

Pier attached fenders, dolphins etc will in many cases be found completely out of scale with the energies to be handled.

Cofferdam cells consisting of circular sheet pilings filled with gravel and braced by a top slab may form efficient and relatively inexpensive protection, provided firm bottom is available at reasonable depth.

Artificial islands may protect even against large vessels but their dimensions and cost increase rapidly with the water depth and the subsequent reduction in water section may not be acceptable.

In 1979 tender was called for the protection of the piers of the ZARATE-BRAZO LARGO bridges over the PARANA river (RA) against impact from oceangoing vessels. The two bridges were built 1971-78 for combined road/rail traffic over two arms of the river. Each bridge comprises three cable stayed main spans, 110-330-110 m, with piers placed in deep water in the silty movable riverbed on high piling bearing on sand, 56 and 70 m respectively under MWL.

The majority of the tenderers offered floating protections, one of which was accepted for execution. Other tenderers proposed fixed protections, but in the present case these came out extremely costly due to the unfavourable foundation conditions.

A floating protection consists of pontoons, buoys or suchlike, anchored to the bottom of the water and interconnected by chains or tendons, supposed to intercept off-course vessels. The system may include special devices for energy absorption.

At several occasions floating systems have been proposed, but they are often regarded with certain scepticism as not sufficiently reliable or requiring a too intensive surveillance. One of the few systems actually put into service protects the TARANTO bridge over the MARE PICCOLO (I). It is designed for vessels up to 15,000 t displacement coming at a speed of 3.1 m/sec, it consists of chains spanning between buoys and anchored to concrete blocks by other chains, equipped with energy absorbers based on pistons sliding in lead filled steel cylinders.

In recent publications SAUL and SVENSSON have summarized the theory of ship collision against bridge piers [3] and given a survey of known measures for pier protection, analysing their suitability to the ZARATE-BRAZO LARGO case (ZBL) and comparing costs and efficiencies of the dozen proposals received as an answer to the abovementioned tender [4] .

The tender has clearly demonstrated the inherent possibilities of floating protections, but also shown the necessity of further development to render such systems fully reliable.

The purpose of the present paper is to examine the possible lay-out and the basic components of such systems in order to help to ensure them the credit they deserve.

2. ARRANGEMENT OF A FLOATING PROTECTION

In the lay-out of the system, two zones have to be distinguished, one covering the main piers, the other the remaining piers in waters sufficiently deep to be reached by vessels.

For the piers adjacent to the navigation channel on-course vessels are allowed to come fairly near, hence the margin left to stop or deviate an off-course vessel will be narrow, of the order of some 5-25 m and the protective system has to be relatively stiff. The solution may consist in the provision of duly anchored buffers covering the required angle and placed sufficiently ahead of the piers to avoid all risk of being thrown against these ones.

Such buffers tend to demand considerable dimensions and may advantageously be of great mass. They must be designed to receive the impact of the vessels, either directly or through fender tendons. A part of the kinetic energy will be absorbed in the choc damaging the vessel whereas the rest will be absorbed through the proper response of the system.

For the remaining piers, the required protection can be placed further in advance of these and a relatively flexible system will suffice. No buffers need to be provided but just duly anchored buoys carrying between them a fence consisting of parallel tendons, situated a few meters above and below the water level, and designed to capture and stop the vessels over a distance which may be of the order of say 50-100 m.

In order to reduce the risk of being oversailed, the fence shall be duly braced by e.g. nylon wires and fendered by neoprene cylinders or similar.

Buffers and buoys will be anchored to the sea bed by relatively small size anchor lines designed to ensure the stand-by position of the floating elements. For the buffers at least three raking anchor lines will be required in order to closely maintain its location independently of the variations in water level.

The floating elements are further retained by large size cables of considerable length connected to fixed anchors in the river bed and weighted with one or several loads in predetermined positions along the cable. During stand-by, the loads will rest on the river bed but when the system is activated, the cable will be stretched and the loads lifted. The geometry of the system is such that the desired ratio force-displacement is achieved.

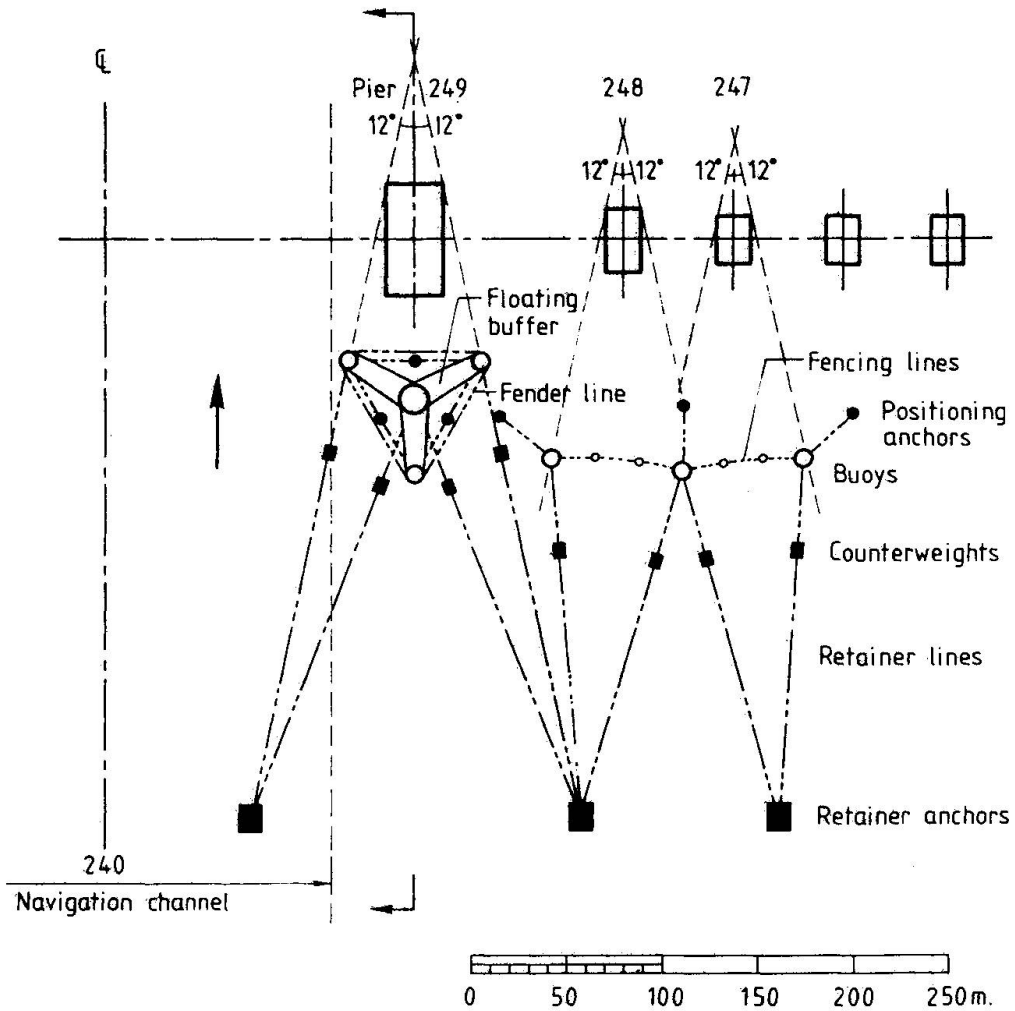

Fig.1 Floating protection. Typical lay-out. (Here e.g. shown applied to the Zarate Brazo Largo bridge over the Paraná-Guazú)

3. MARINE TENDONS

The floating protection as described requires cables for fender lines, fencing lines, anchor lines and retainer lines.

The common feature for all these applications is a demand for high breaking load, good fatigue performance, durability in dry and immerged condition, flexibility and resistance to wear, abrasion and rough treatment ; in most cases, the cables will stand under low permanent stresses but may be subjected to violent shocks.

In some cases, chains might be used, but only flexible cables constitute a multipurpose tool covering all the needs encountered here. In this paper, only tendons built up from parallel prestressing strands are dealt with. Such strands are favourable due to an excellent price/performance ratio.

A type of tendon has been developed which is specially fitted for this type of application [5] . It is constituted by parallel strands, either dry, greased or galvanized, each one covered at the mill with a tight fitting polyethylene duct. The bundle of elementary fairly parallel strands is enclosed by a watertight outer duct, generally a high density polyethylene pipe. The space left between the elementary duct-covered strands is filled with a high-viscosity pretroleum base compound of lubricant and corrosion protective capacity (e.g. VISCONORUST 2090 P-4, which possesses substantial record from nuclear prestressing works).

The outer duct may be further protected against local pressure or abrasion by a spirally wound wire or strand of steel or glass fibre covered by plastic or neoprene.

The tendons are anchored by anchorages of the same types as applied for cable stays, the fatigue performance of which has been proven by laboratory tests [6] . The individual strands may be held by swaged grips or by wedges. The anchor blocks may, depending on the size of the tendon, be single or multilevel blocks in order to reduce their diameter and thereby the strand deviations.

The front block is screwed into a socket, the type of which may be selected for the particular application of the tendon and its method of erection f.i. a hammerhead, an eye bolt or a cylinder with a collar bearing against a plate embedded in the structure and blocked against pull-out.

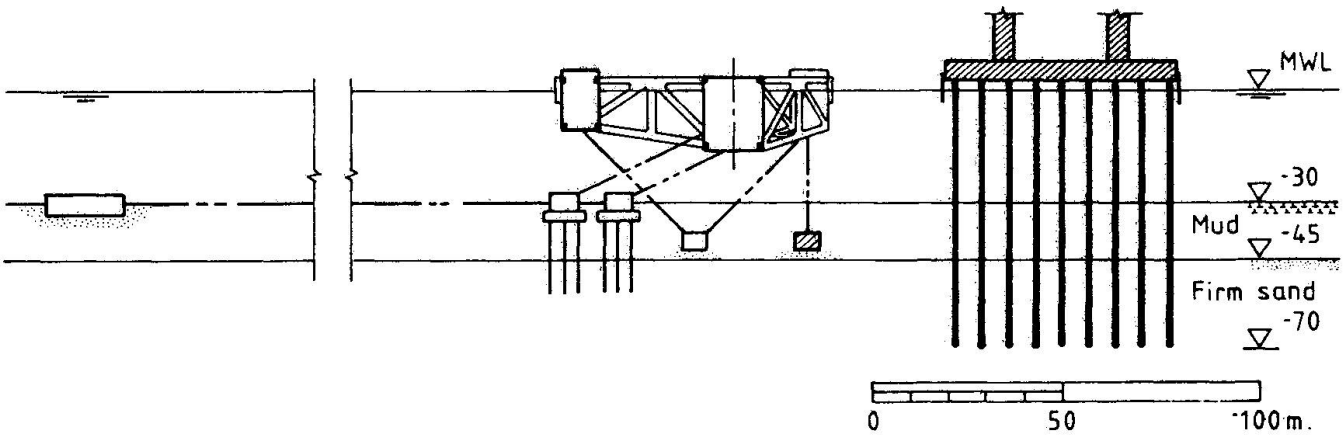

Fig.2 Vertical section through buffer. Ex :(Z B L.)

In the immediate vicinity of the anchorage, the outer duct may be replaced by a steel transition pipe in order to cater for bending stresses which otherwise might reduce the fatigue strength in that zone.

The anchorage itself is fully closed and filled with an epoxy tar compound which covers also the adjacent part of the tendon, overlapping the ducts protecting the individual strands. The outside of the anchorage is duly protected.

Tendons of this type are available in sizes up to 91 strands of 15 mm nominal diameter, i.e. up to breaking loads of 24 MN, service loads about half thereof, fatigue life 2 mill cycles with stress ranges of the order of 180 to 250 MPa at a stress level corresponding to the service load.

The tendons must be fabricated in shop near the construction site in order to ensure high quality and exclude transport and storage which might require coiling on small diameter drums that could be harmful to the preformed tendon.

It will be seen that the tendon is provided with a multibarrier protection against corrosion, namely outer PE-duct,tendon filler compound, inner PE-duct and possibly grease or galvanization. However, such a multibarrier will be efficient only if all singular points along the tendon are correctly treated.

This concerns primarily the bending radii adopted for the finished tendon. In order to keep the bending stress in the PE-duct below yield, the ratio D/d between the diameters of the bend and the duct should for long duration not be less than 50 and for short duration not less than 25. The adoption of such bending diameters will also prevent damage of the protective enclosure from the strands when these are tightened and slide over the support.

Where the tendon leaves or enters a structural element, its position cannot be predetermined, and even if a hinge were provided, it might not work properly. Therefore, in order to avoid kinks either the tendon will have to be protected over a certain length by a special transition pipe or the outlet will have to be funnel shaped with the right curvature. The latter solution offers the advantage of permitting the same tubing to apply all along the current length of the tendon. On the other hand, it may be preferable to keep the tendon sizes fairly moderate in order to prevent the bending diameters from becoming too bulky.

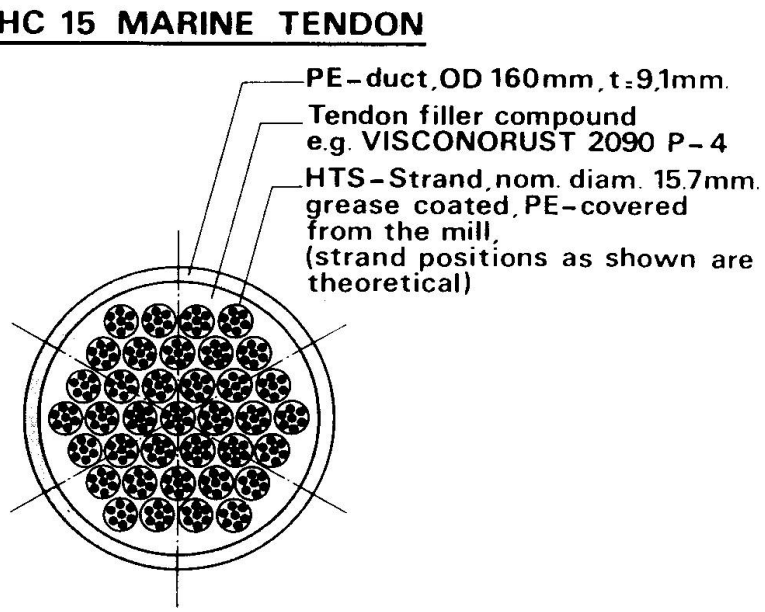

Fig.3 Marine tendon.
Typical cross section.
Ex : 37 HC 15.

The anchor lines and retainer lines may generally be arranged so that they pass through the blocks placed on the river bed but have both of their anchorages situated near the water surface for easy access.

4. FLOATING ELEMENTS

The floating elements may be constructed of steel or concrete. Steel may be preferable for smaller buoys whereas concrete due to its mass will be advantageous for the major elements. In some cases, the consideration of floatability may limit the weight and thereby favour the use of light weight concrete.

The buffer needs to cover a considerable area but should not oppose too large a section to the water flow. Therefore, it may be constituted from several caissons, rigidly connected to a central one. The openings between the outer caissons may be closed off by fender tendons hanging at about water level.

The outer caissons, but not the central one, will be exposed to vessel impact. Therefore, their punching shear stress has to be checked for a collision force determined with due regard to the displacement provoked by the shock.

For the evaluation of collision forces reference is often made to MINORSKY's formula, which is based on empirical data collected from actual ship collisions and which establishes a linear relationship between energy and deformed volume of steel, covering energies up to 5,000 MNm.

Collision tests between model pairs of ships carried out in Germany have permitted WOISIN to conclude that the collision force is fairly constant during a collision but attains for a short duration (0.1 to 0.2 sec) its maximum value which is about twice its average and depends, in first line, on the ship size and the shape of the striking parts, and only to a lesser extent on the kinetic energy involved. A simple empirical formula relating max. collision force to the ship size (DWT) has been given. The validity of the formula is extended by its author to cover the case of a ship striking a stiff body. The floating buffer is considered as such, but its capacity to withdraw under the blow will reduce the damage caused to the striking vessel and probably the collision force. Shaping of the buffer as an isosceles triangle may favour the deviation of the vessels for all cases except a frontal shock.

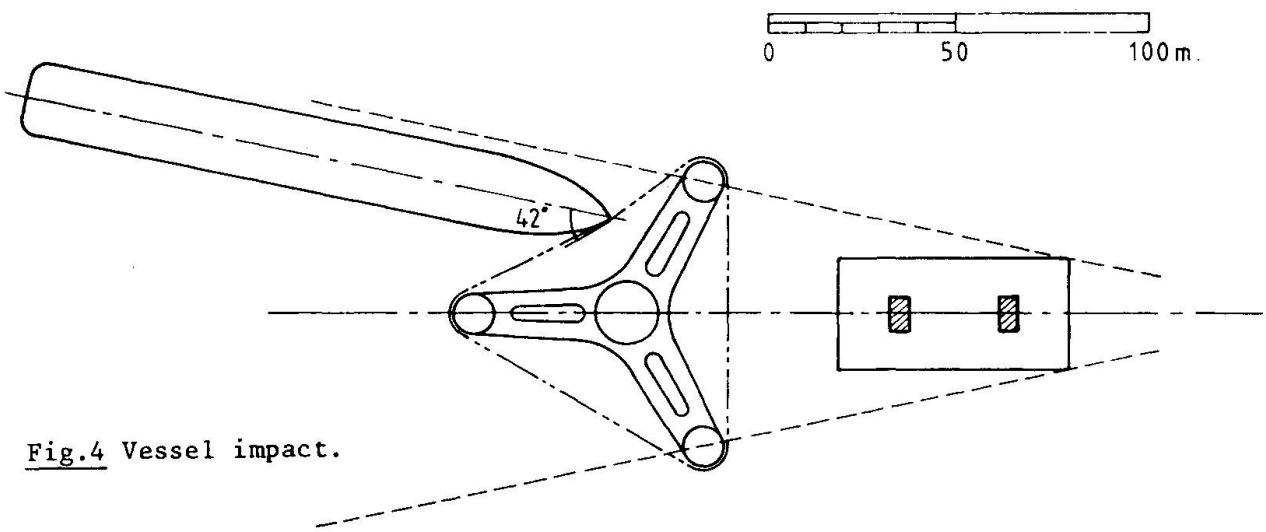

Fig.4 Vessel impact.

5. ANCHORAGE OF FLOATING PROTECTIONS

The floating elements will be anchored to concrete blocks placed on the river bottom, generally concrete caissons sunk and ballasted, through which the marine tendons are passed. The detailed design of the blocks and their supports depends on the soil conditions.

Two different types have to be considered, namely the positioning anchors and the retainer anchors.

The first ones are relatively small ; during stand-by, they should remain in position with a tolerance for the buffer anchors of say two meters horizontally and vertically, more for the anchors of the flexible system. They are allowed to move when the system is activated, provided they will not thereby cause damage to the floating elements or to the bridge.

Generally, these anchor blocks will have to be placed on a gravel coffin prepared in a carefully dredged area. In extreme cases, they may require piling and special precautions to prevent them from dropping into cavities caused by erosion of the river bed.

The retainer anchors are relatively large, their position should remain fixed but their level is of minor importance. Generally, they will have to be placed on a gravel bed, in a dredged area and protected by stone filling in order to ensure friction ; if necessary, some vertical prestressing tendons used as rock or soil anchors could be added, or a steel skirt which will force the rupture lines to pass into the supporting soil.

The technique of prestressing tendons applied as rock or soil anchors is well known ; anchors for permanent use, provided with an uninterrupted reliable barrier which fully isolates the steel from the surrounding medium have been developped, tested and frequently used under the most variable circumstances. Generally, such anchors are applied on-shore, they are less frequent in submarine condition due to high cost of installation, but technically, the case is not fundamentally different.

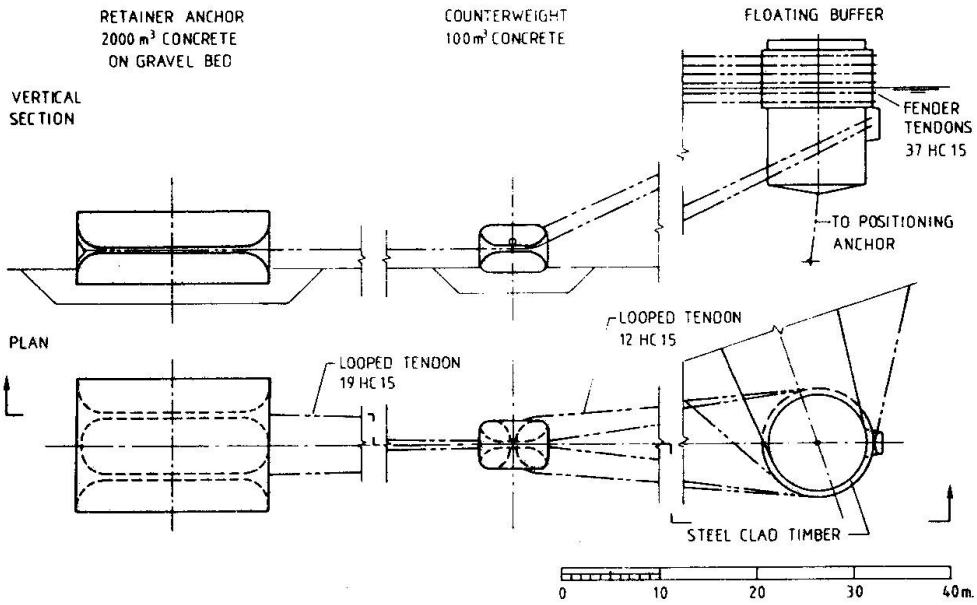

Fig.5 Floating protection. Details of tendon arrangement, counterweight and retainer anchor. Ex : (Z B L.)

6. APPLICATION

To illustrate the concept of floating pier protection its application to a bridge as the ZARATE BRAZO LARGO is shown schematically fig. 1-6.

The design criterias are as indicated in [4] , especially for the main piers, considering collision from a vessel of 20.000 t displacement, moving downstream at a ground speed of 2 m/sec under an angle with the pier axis of up to 12° to either side. The water velocity is 1 m/sec.

The kinetic energy of the vessel including that of 5% supplementary hydrodynamic mass amounts to 42 MNm. For comparison, the maximum impact force of the vessel against a stiff pier has in [4] as a first approximation been found from WOISIN's formula to Pmax. = 108 MN ± 50% with a damage length of 0.8 m.

For a frontal blow of the vessel against the buffer, a rough estimate gives a ratio of struck to striking mass of $m_2/m_1 = 1/3$, so the fraction of energy which is absorbed in the immediate plastic deformation may be assumed to $m_2/m_1 + m_2 = 1/4$ (10 MNm). The rest of the energy will be transformed by the extension of retainer tendons, working at stresses below 0.5 GUTS (7 MNm) and by the lifting of the counterweights (28 MNm). Passed the first instants of the shock, the force exerted on the vessel will not exceed 15 MN (see diagram fig. 6). Beyond the design shock the system still possesses ample margin before attaining its ULS determined by the yield of tendons or the sliding of retainer anchors. In this balance supplementary hydrodynamic energy dissipation has been neglected.

A lateral shock will demand less energy to be transformed and will probably in most cases produce a relatively soft deviation of the vessel. The post-collision behaviour of the vessel may need computer simulation or model testing.

For the system as designed the variation in water level result in a tolerance on the position of the buffer of an order of 5 m. The movable character of the river bed may require comprehensive works in order to ensure the level of the positionning anchors and the counterweights placed in the river, piling or the constitution of stable gravel coffins may be required.

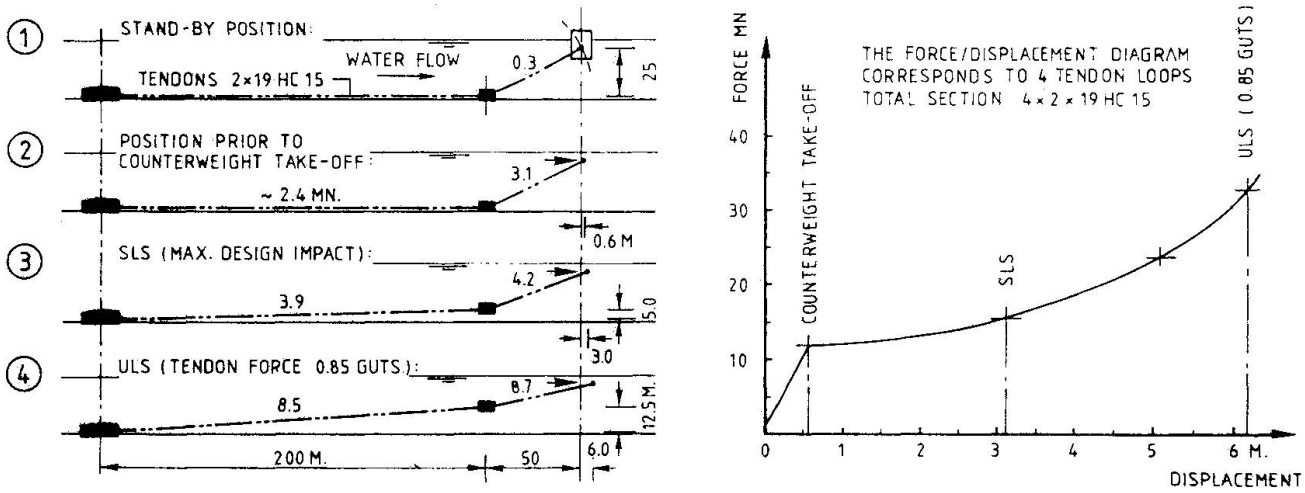

Fig.6 Performance of floating protection. Ex :(Z B L.)
Left : tendon positions and forces for one loop.
right : force/displacement diagram for buffer retained by 4 loops.

7. CONCLUSIONS

It is possible to conceive floating systems able to give bridge piers an acceptable degree of protection against ship impact.

The technology involved in the construction of such systems does not exceed what is known from marine works. The systems require a surveillance of about the same intensity as other installations in navigable waterways and the same as many bridge structrures.

In order to become efficient the systems will be expensive compared to the cost of the piers, but seem to be competitive especially in deep waters and they may often constitute the only means for the protection of the whole length of a bridge at reasonable cost. The application of such systems to waters with ice problems has not been considered by this paper.

Generally, it seems preferable to consider ship impact and the protection it might require already in the original design of a bridge structure in order to ensure correct judgment of span lengths and realistic evaluation of different foundation alternatives.

Floating protections may constitute a nuisance to other users of the waterway and its surroundings. Aesthetically, even well designed protections will probably be found to be of unaccustomed appearance.

A great number of existing bridges require protection, a floating protection will, for many of these, constitute the only realistic approach.

REFERENCE

1 OSTENFELD, Chr., Ship collisions against bridge piers, AIPC memoires 1965.

2 FRANDSEN, A.G. and LANGSO, H., Ship collision problems. I. Great Belt bridge. II International Enquiry. IABSE proceedings P 51/80 May 1980.

3 SAUL,R. und SVENSSON, H., On the theory of ship collision against bridge piers. IABSE proceedings P51/82 May 1982.

4 SAUL, R. und SVENSSON, H., Zum Schutz von Brückenpfeilern gegen Schiffsanprall, dargestellt am Beispiel der Brücken Zarate-Brazo Largo über den Parana (Argentinien). Die Bautechnik 10/1981.

5 Brevet français P.V 773 57 52. Cable d'amarrage et dispositif d'ancrage utilisant un tel câble. Déposé le 28 nov. 1977.

6 MONDORF, P.E. et DE LA FUENTE, C., Developpement des haubans pour grands ponts. La Technique Française de Précontrainte, 9. congrès FIP, Stockholm 1982.