Zeitschrift: IABSE reports = Rapports AIPC = IVBH Berichte

Band: 37 (1982)

Artikel: Fatigue design concept considering the indefinite state of stress in the reinforcement of RC-beams

Autor: Frey, R.P.

DOI: https://doi.org/10.5169/seals-28936

Nutzungsbedingungen

Die ETH-Bibliothek ist die Anbieterin der digitalisierten Zeitschriften auf E-Periodica. Sie besitzt keine Urheberrechte an den Zeitschriften und ist nicht verantwortlich für deren Inhalte. Die Rechte liegen in der Regel bei den Herausgebern beziehungsweise den externen Rechteinhabern. Das Veröffentlichen von Bildern in Print- und Online-Publikationen sowie auf Social Media-Kanälen oder Webseiten ist nur mit vorheriger Genehmigung der Rechteinhaber erlaubt. Mehr erfahren

Conditions d'utilisation

L'ETH Library est le fournisseur des revues numérisées. Elle ne détient aucun droit d'auteur sur les revues et n'est pas responsable de leur contenu. En règle générale, les droits sont détenus par les éditeurs ou les détenteurs de droits externes. La reproduction d'images dans des publications imprimées ou en ligne ainsi que sur des canaux de médias sociaux ou des sites web n'est autorisée qu'avec l'accord préalable des détenteurs des droits. En savoir plus

Terms of use

The ETH Library is the provider of the digitised journals. It does not own any copyrights to the journals and is not responsible for their content. The rights usually lie with the publishers or the external rights holders. Publishing images in print and online publications, as well as on social media channels or websites, is only permitted with the prior consent of the rights holders. Find out more

Download PDF: 05.02.2026

ETH-Bibliothek Zürich, E-Periodica, https://www.e-periodica.ch

Fatigue Design Concept Considering the Indefinite State of Stress in the Reinforcement of RC-Beams

Concept de dimensionnement à la fatigue en considérant l'état de tensions indéfini dans l'armature des poutres en béton armé

Bemessungskonzept für Ermüdung unter Berücksichtigung der unbestimmten Spannungen in der Bewehrung von Betonbalken

R.P. FREY
Research Associate
Swiss Federal Institute of Technology
Zürich, Switzerland

SUMMARY
In order to analyse the fatigue behaviour of reinforced concrete structures a knowledge of the state of stress is essential. With the emphasis on the shear behaviour a series of six reinforced concrete beams under cyclic loading was tested. From the measured strains it becomes evident that the stresses vary within a considerable range. However, the stress amplitude can be determined more accurately. It follows that a fatigue design concept should be based on the stress range.

RESUME
La connaissance de l'état de tensions est importante pour la compréhension du comportement à la fatigue des membres en béton armé. Pour étudier spécialement celui de la résistance à l'effort tranchant, on a exécuté six essais sur des poutres en béton armé. Les résultats des mesures montrent que les tensions varient considérablement tandis que leurs différences peuvent être déterminées avec plus de précision. Il s'en suit qu'un concept de dimensionnement à la fatigue devrait donc être basé sur les différences de tensions.

ZUSAMMENFASSUNG
Für die Erfassung des Ermüdungsverhaltens von Betonbauteilen ist die Kenntnis des Spannungszustandes Voraussetzung. Mit Schwerpunkt auf dem Schubverhalten wurden sechs Ermüdungsversuche an Stahlbetonbalken durchgeführt. Die Messungen zeigen, dass die Spannungen über einen grossen Bereich variieren, die Spannungsdifferenzen jedoch besser erfasst werden können. Daraus wird gefolgert, dass ein Bemessungskonzept für Ermüdung auf den Spannungsdifferenzen basieren sollte.

1. INTRODUCTION

Recent studies on the shear strength of reinforced concrete beams under static loading led to new design rules and codes (CEB Model Code, 1978; SIA 162-RL 34, 1976; [1], [2]) which permit less web reinforcement. In order to study the fatigue behaviour of beams designed according to the new static rules, a knowledge of the stresses under service load conditions is essential. With emphasis on the shear behaviour a series of six reinforced concrete beams under cyclic loading were tested.

2. TEST PROGRAM, MAIN PARAMETERS

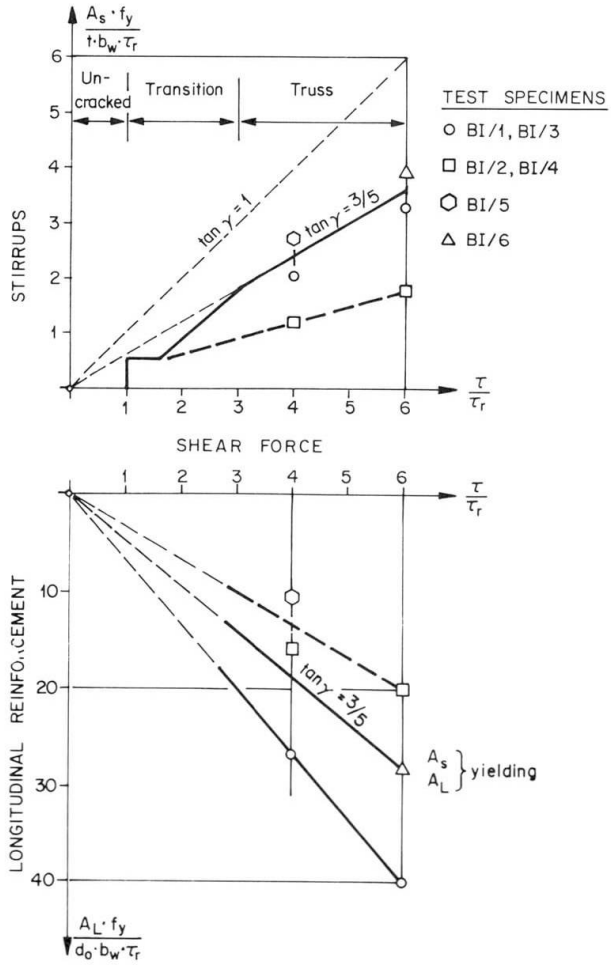

Fig. 1: Design Parameters

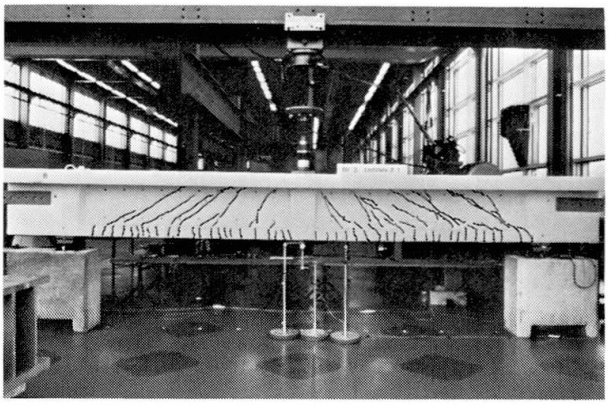

Fig. 2: Test Set-up, Beam BI/3

The layout of the tests was based on the ultimate load design approach given in the Swiss Code SIA 162-RL 34, which assumes a truss model with variable inclination of the diagonal concrete compression field (Fig. 1). The minimum angle, $\tan\gamma = 0.6$, was chosen. This led to the minimum shear reinforcement for the beams BI/1,3,5,6. The longitudinal reinforcement was varied from values below the level at which the stirrups and longitudinal reinforcement yield to values corresponding to an over-reinforced beam (specimens BI/1 and 3) and including the case where both reinforcements yield (specimen BI/6). Two beams were tested with only 50% of the reinforcements of beams BI/1 and 3.

The second main parameter was the nominal shear stress (web thickness). This led to four beams unsymmetric with respect to the web thickness (specimens BI/1,2,3,4) and two symmetric beams (specimens BI/5 and 6).

The test set-up consisted of simply supported beams with a concentrated load at midspan (Fig. 2) producing a constant shear force but different nominal shear stresses for the unsymmetric beams. All specimens had the same span and depth. Table 1 gives the essential dimensions of all six beams.

The upper level of the cyclic loading was chosen to fall in the region of service loads and fixed at 50% of the ultimate design load. The maximal possible load range, fixed by the limitations of the testing arrangement, was chosen (Fig. 3). All beams were loaded statically up to the maximum load F_{max} = 370 kN and then subjected to a constant cyclic loading with a load range of 30 to 370 kN with the exception of beam BI/1. A statical test to failure was done at the end of the test program for each beam. Beam BI/1 was tested under cyclic loading with increasing maximum load levels.

SPECIMEN		BI/1	BI/2	BI/3	BI/4	BI/5	BI/6
LOAD EQUIPMENT		CLOSED LOOP SYSTEM		PULSATOR			
DIMENSIONS							
SECTION		T	T	T	T	T	T
SPAN	L [mm]	5000	5000	5000	5000	5000	5000
DEPTH	D	680	680	680	680	680	680
UPPER FLANGE	b_{sup}	800	800	800	800	1400	1400
LOWER FLANGE	b_{inf}	350	350	350	350	—	200
WEB THICKNES	b_w	100/150	100/150	100/150	100/150	150	100
REINFORCEMENT							
LONG REINFORCEMENT	A_L [mm²]	5650	2830	5650	2830	2830	3890
STIRRUPS	A_S [mm²/m]	786	402	786	402	786	786
LONG REINFORCEMENT	ρ_L [%]	1.13	0.52	1.13	0.52	0.33	0.45
STIRRUPS	ρ_S [%]	0.79/0.52	0.40/0.27	0.79/0.52	0.40/0.27	0.52	0.79
MATERIAL PROPERTIES		CONCRETE: $f_{cwk} \geq 30$ N/mm², $\tau_R = 1$ N/mm²		REINFORCEMENT: $f_{yk} \geq 460$ N/mm²			

Table 1: Beams BI/1-6, Dimensions and Properties

The first two specimens were tested with a closed loop system. The main interest in beams BI/1 and 2 was in the strain history during the first few cycles as well as the influence (in beam BI/1) of previous load cycles on the development of strains at higher load levels. The beams BI/3 to 6 were tested using a Amsler pulsator.

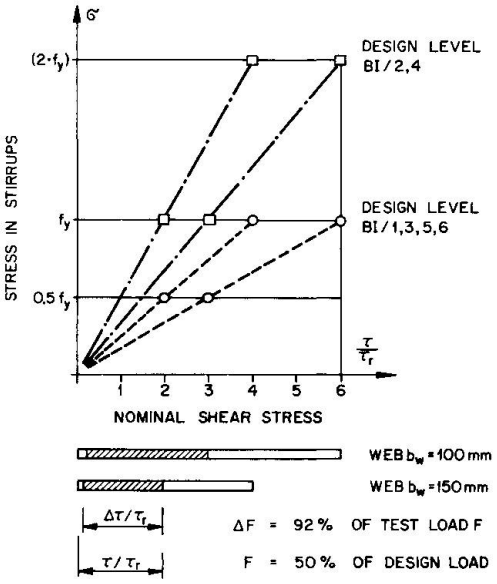

Fig. 3: Load and Design Level

All measurements were taken from measuring marks glued on the concrete, with exception of those used to measure the strains in the longitudinal reinforcement and the stirrups which were glued directly on the reinforcing bars. The gauge length varied from 100 mm (local stirrup strains) to 300 mm (average stirrup strains over the web depth). 100 mm gauge length for the stirrups was employed on one side of the web. On the other side, only the average stirrup strain over 300 mm was measured. Strain gauges were used to determine local concrete deformations. The measurements were taken under static load corresponding to lower and upper load levels. Deflections during cyclic loading were observed to check for any dynamic effects.

3. BEAM BI/3, RESULTS

Because the results collected during the whole test series are quite extensive, only those of a typical test beam, BI/3 (Fig. 4), are presented. Fig. 5 shows

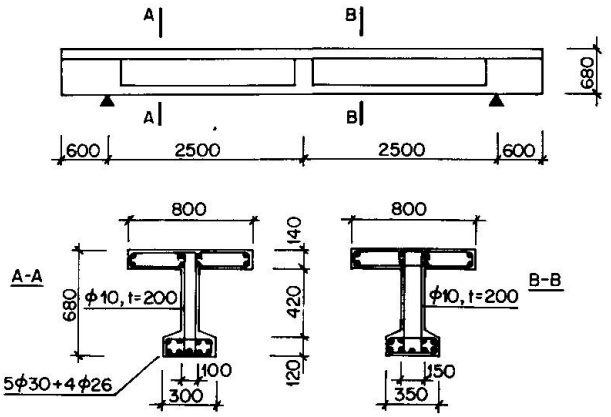

Fig. 4: Beam BI/3

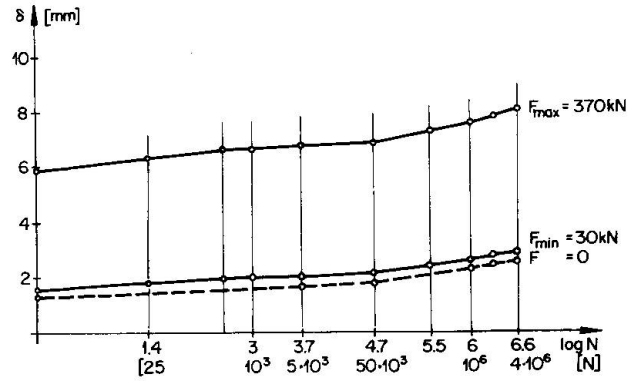

Fig. 5: Beam BI/3, Deflection History

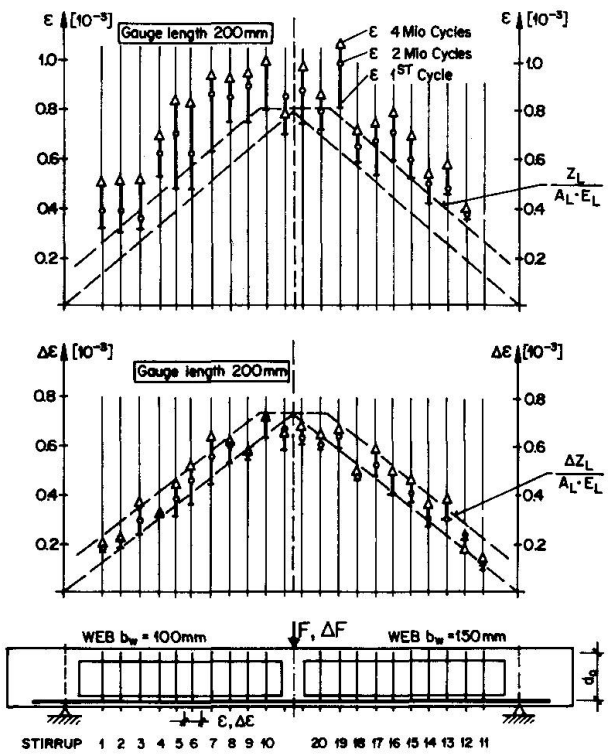

Fig. 6: Beam BI/3: Variation of Strains in Longitudinal Reinforcement under max. Load F = 370 kN and under Load Range ΔF = 340 kN

the deflection history at midspan. It is representative of the strain history in the stirrups and the longitudinal reinforcement. The increase of strains with the number of cycles is very high at the start and becomes smaller once the crack pattern is fully formed. It also becomes evident from the figure that the increase in the deflection range is smaller than the increase in deflection under maximum or minimum loads.

Figure 6 shows the measured strains and the measured strain ranges in the longitudinal reinforcement at the first cycle, at two Mio cycles and at four Mio cycles. The difference in the scatter between the maximum strains ε and the strain range Δε, as well as different growth rates is apparent.

Analogous conclusions can be drawn with respect to the stirrup strains (Figs. 7 and 8). In addition, it can be seen that stirrups with small initial strains after the first few cycles have a larger increase than stirrups with already high stresses. This is due to the development of the final crack pattern and a rearrangement of the internal forces.

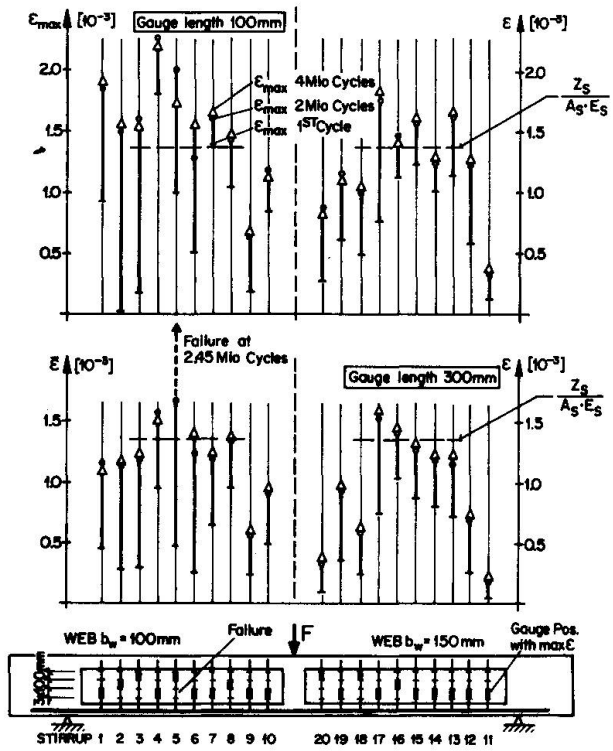

Fig. 7: Beam BI/3: Variation of Stirrup Strains under max. Load F = 370 kN

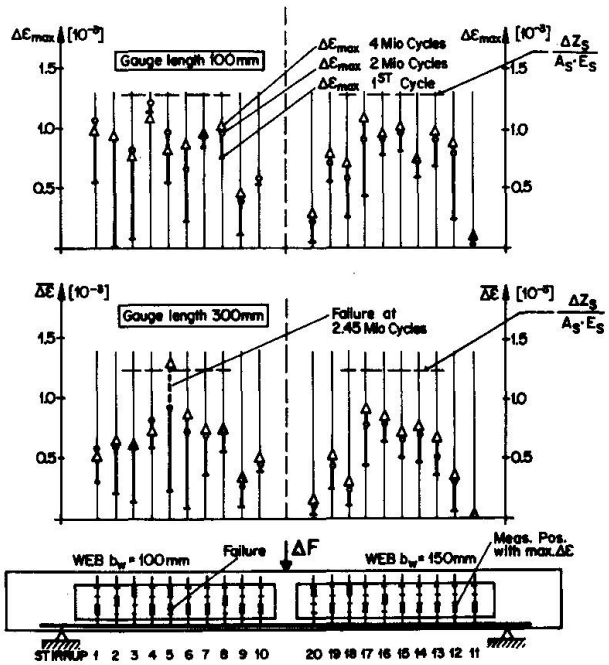

Fig. 8: Beam BI/3: Variation of Stirrup Strains under Load Range ΔF = 340 kN

4. TRUSS MODEL

Beams under high shear forces can be decomposed into their functional elements. For a static analysis under service load conditions a truss model is used with the upper and lower stringers as chords, the stirrups as ties and the concrete as diagonal compression field inclined at angle α (Fig. 9, [3]).

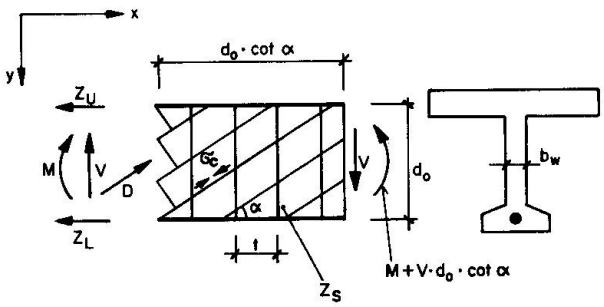

$$D = \frac{V}{\sin\alpha}$$

$$Z_L = \frac{M}{d_o} + \frac{1}{2} \cdot V \cdot \cot\alpha$$

$$Z_U = -\frac{M}{d_o} + \frac{1}{2} \cdot V \cdot \cot\alpha$$

$$Z_S = \frac{V \cdot t}{d_o} \cdot \tan\alpha$$

$$\sigma_c = \frac{-D}{b_w \cdot d_o \cdot \cos\alpha} = \frac{V}{b_w \cdot d_o} \cdot \frac{1}{\sin\alpha \cdot \cos\alpha}$$

Fig. 9: Truss Model for Bending and Shear

5. DISCUSSION OF RESULTS

For the discussion of the test results the following assumptions are made to calculate the stirrup stresses. Using the experimentally observed inclination of the cracks in the undisturbed section, not directly influenced by the load nor the reactions, as angle α (Fig. 2, $\alpha \simeq 33^o$) for an uniaxial web compression field, the stirrups are determined from equilibrium consideration. They constitute an upper limit because of the assumption of zero tensile strength for the concrete.

The measured strains under maximum load, which are average values over the gauge length, and hence somewhat smaller than the maximum strains in the cracks, increase during cycling, whereas the strain differences under ΔF do not reach the level of the measured maximum Δε over 100 mm gauge length (Figs. 7 and 8). An analogous consideration can be made for the strains and stresses in the longitudinal reinforcement (Fig. 6).

From the measured values it can also be seen that the increase of the strains under maximum load is higher than the increase of the differences of the strains. These observations show that a marked scatter of the maximum and minimum strains in the different stirrups exist. This situation is due to residual stresses caused by blocking of the cracks, local overstresses, etc. The strain variation Δε becomes more regular with increasing number of cycles, in particular, it does not exceed the calculated value Δε. This strongly suggests the use of the stress variation Δσ as a basis for the fatigue design of the reinforcement. Such a Δσ-concept is proposed for the revision of the Swiss Code SIA 162.

6. STIRRUP FAILURES

In four beams stirrups of diameter 10 mm were used while two beams had stirrups of diameter 8 mm. A total of 76 fatigue failures were observed. Only two stirrups failed at the lower bend. These two failures at the bend occurred in both cases after two or more stirrups, crossed by the same crack, had previously failed. No failure of longitudinal reinforcement occurred.

From the first failure until loss of serviceability occurred, a considerable number of cycles elapsed. The above discussed specimen BI/3 for example was loaded

up to 5.75 Mio cycles with a stirrup failure in one leg occurring at 2.45 Mio cycles.

In Fig. 10 a summary of stirrup failures is given. The observed $\Delta\sigma$ in the stirrups is plotted against the number of cycles to failure. In many cases the failure of one leg of a stirrup induced the failure of the other leg at the same position in the crack after a few more cycles due to a considerable increase of stress.

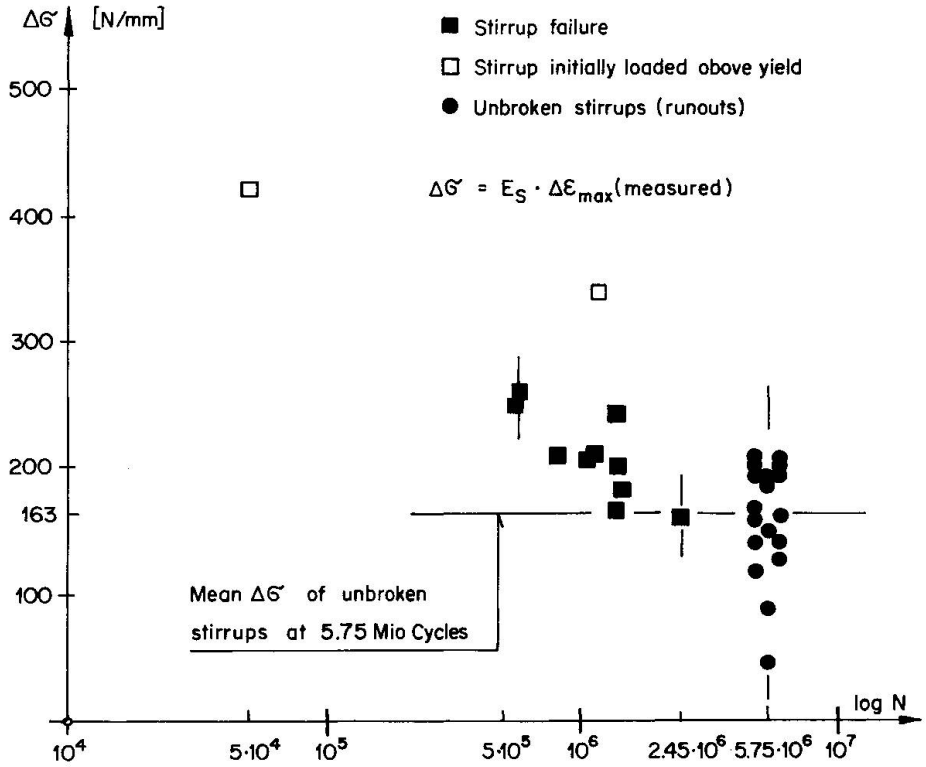

Fig. 10: $\Delta\sigma$-N Diagram for Stirrups, diameter 10 mm

7. CONCLUSIONS

The results of fatigue tests of six beams under bending and shear showed a big scatter in the stresses of the stirrups and the longitudinal reinforcement. During cycling increases were observed, in a few cases even producing yielding of stirrups. The analysis showed that the stress amplitude can be determined more reliably than the maximum and minimum values. Hence, it follows that a fatigue design concept should be based on the stress range considering a mean $\Delta\sigma$ calculated from a fully developed truss model.

REFERENCES

1 Directive RL 34, Supplement to Structural Design Code SIA 162, 1976. Schweiz. Ingenieur- und Architekten-Verein, Zürich, 1976.

2 Comité Euro-International du Béton (CEB): "Code modèle pour les structures en béton", Système internat. de règlementation technique unifiée des structures, vol. II, Bulletin d'information, No. 117, Paris, décembre 1976.

3 Thürlimann, B.: Plastic Analysis of Reinforced Concrete Beams", IABSE Colloq. Copenhagen 1979, Reports of the WC, IABSE Vol. 28, 1979.

4 Frey, R., Thürlimann, B.: "Ermüdungsversuche an Stahlbetonbalken" (Fatigue Tests on Reinforced Concrete Beams). Institut für Baustatik und Konstruktion, ETH Zürich (in preparation).