Zeitschrift: IABSE reports of the working commissions = Rapports des commissions de travail AIPC = IVBH Berichte der Arbeitskommissionen

Band: 16 (1974)

Artikel: Reinforced concrete columns: comparison of different codes

Autor: [s.n.]

DOI: https://doi.org/10.5169/seals-15715

Nutzungsbedingungen

Die ETH-Bibliothek ist die Anbieterin der digitalisierten Zeitschriften auf E-Periodica. Sie besitzt keine Urheberrechte an den Zeitschriften und ist nicht verantwortlich für deren Inhalte. Die Rechte liegen in der Regel bei den Herausgebern beziehungsweise den externen Rechteinhabern. Das Veröffentlichen von Bildern in Print- und Online-Publikationen sowie auf Social Media-Kanälen oder Webseiten ist nur mit vorheriger Genehmigung der Rechteinhaber erlaubt. Mehr erfahren

Conditions d'utilisation

L'ETH Library est le fournisseur des revues numérisées. Elle ne détient aucun droit d'auteur sur les revues et n'est pas responsable de leur contenu. En règle générale, les droits sont détenus par les éditeurs ou les détenteurs de droits externes. La reproduction d'images dans des publications imprimées ou en ligne ainsi que sur des canaux de médias sociaux ou des sites web n'est autorisée qu'avec l'accord préalable des détenteurs des droits. En savoir plus

Terms of use

The ETH Library is the provider of the digitised journals. It does not own any copyrights to the journals and is not responsible for their content. The rights usually lie with the publishers or the external rights holders. Publishing images in print and online publications, as well as on social media channels or websites, is only permitted with the prior consent of the rights holders. Find out more

Download PDF: 28.01.2026

ETH-Bibliothek Zürich, E-Periodica, https://www.e-periodica.ch

Reinforced Concrete Columns
Comparison of different Codes

Colonnes en béton armé
Comparaison de différents règlements de construction

Stützen aus Stahlbeton
Vergleich verschiedener Normen

1. INTRODUCTION

The IABSE Symposium in 1974 at Québec is intended to clarify the information concerning the behavior of reinforced concrete columns unter load. On the assumption that the national codes and specifications reflect the standard of technical knowledge, the Secretariat of IABSE issued a questionnaire in 1973. The response to it is discussed below.

2. BASIS OF THE ENQUIRY

The questionnaire sent to the various national groups of IABSE, concentrated mainly on the carrying capacity of rectangular reinforced concrete columns. To obtain replies, as free as possible of errors and misunderstandings, the questions were made fully specific; a well defined cross section was taken as a basis. The main conclusions drawn from the results were to be presented at the time of evaluation as dimensionless quantities.

The questionnaire was sent to the Presidents or Secretaries of 33 national groups of IABSE and to one member of IABSE for 27 other countries which have not yet formed a national group. Thus at least 80% of the world population is covered by this enquiry. The same questionnaire was sent also to the Secretariat of the "Comité Européen du Béton (CEB)". 28 of the 61 mailed questionnaire have been returned to the Secretariat. The comparative study based on the replies from the countries listed in Table 1 includes at least 50 % of the world population. In terms of building industry, 80% of the total cement consumption is used in compliance with the codes of these countries. The abbreviations are based on the international motorcar plates.

Table 1

abbreviation	Country	short version of code title	Design basis	
			working stress	ultimate or limit state
A	Austria	ÖNORM B 4200.9		X
B	Belgium	NBN 15 (6.issue)	X	
CDN	Canada	CSA-A23.3-1973		X
CEB	"Comité Européen du Béton"	CEB-FIP (1970)		X
CH	Switzerland	SIA 162 (1968)	X	
D	Federal Republic of Germany	DIN 1045 (1972)		X
DDR	German Democratic Republic	TGL 0-1045 (1974)		X
DK	Denmark	DS 411 (1974)		X
F	France	TITRE VI,fasc.61	X	
GB	Great Britain	CP 110 (1972)		X
GR	Greece	Dekret v. 18.2.54	X	
H	Hungary	MSZ 15021/15022		X
HK	Hong Kong	CP 114 (1965)		
I	Italy	Norme... (1972)	X	
IND	India	NBCI 1970	X	
J	Japan	JSCE Standard ...	X	
L	Luxembourg	as F,B or D		
N	Norway	NS 3473		X
NL	Netherlands	Voorschr.Beton new		X
NZ	New Zealand	NZS 3101 P (1970)		X
PAK	Pakistan	as USA or GB		
PL	Poland	PN-56/B-03260		X
RI	Indonesia	NI 2-1971		X
S	Sweden	B6 and B7	X	
SU	UDSSR	SN 365-67		X
TR	Turkey	TS 500	X	X
USA	USA	318-71		X
ZA	South Africa	SABS, SBR, Chapt.5	X	

3. PROBLEMS IN THE EVALUATION OF THE ANSWERS

The evaluation of the answers to the enquiry presented great difficulties. It was sometimes sufficient to correct quite a number of errors, but it was also necessary to re-calculate whole series and this was possible only where adequate information was available. Answers have been left out in the present evaluation whenever there was considerable doubt as to its correctness.

To find out the method of the representation of the replies caused some difficulties. It was finally decided to use Histograms, where the sharpness can most easily be attuned to the accuracy of the replies.

The evaluation is based on the codes of countries greatly differing in size and density of population as shown in Figs. 1 and 2.

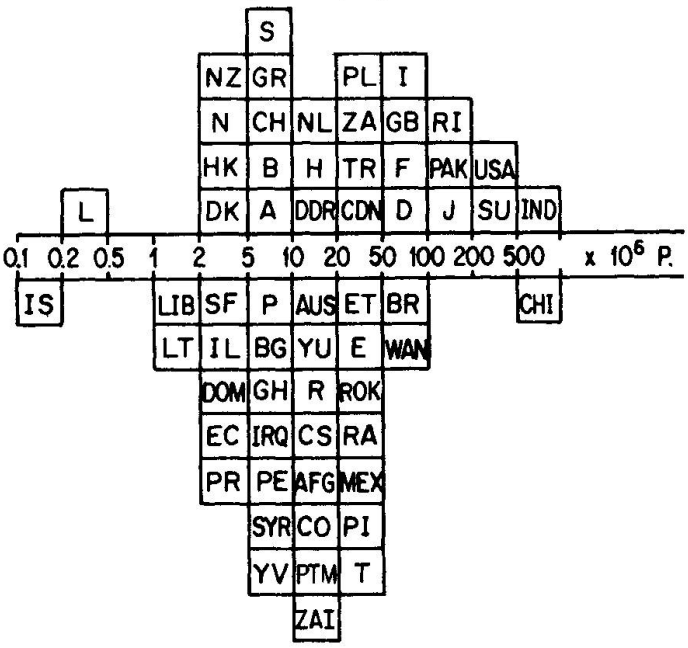

Fig.1: Population of countries considered for the study, in Millions
above: countries having answered
below: countries having not answered

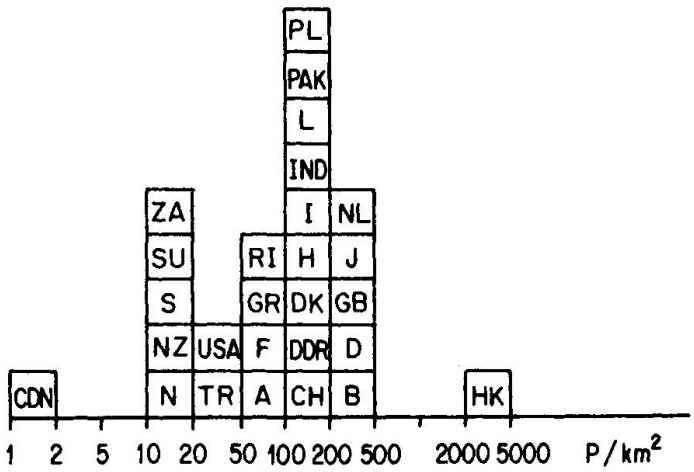

Fig.2: Density of population of countries in persons per km²

The importance of the building industry in these countries is also very different. A useful index is, in this connection, the total cement consumption of the country (Fig.3) or the consumption of cement per head of population (Fig.4).

The figures 1 to 4 make it clear that the importance of the various codes is very different. But any weighting according to their importance leads to insoluble problems. Weighting in accordance with each country's cement consumption is as meaningfull as is the

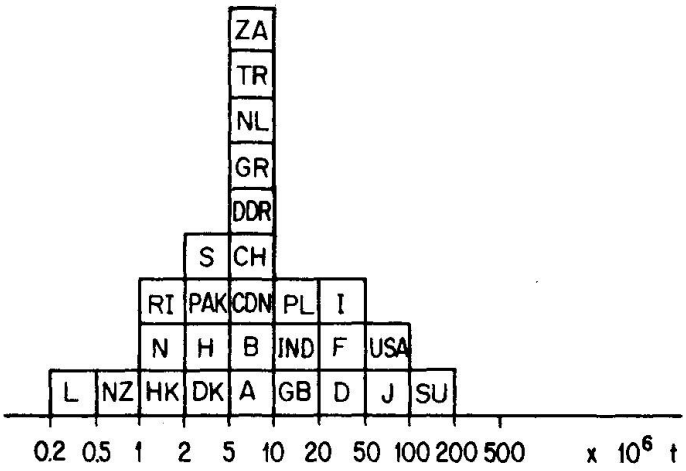

Fig.3: Total cement consumption of countries in metric tons

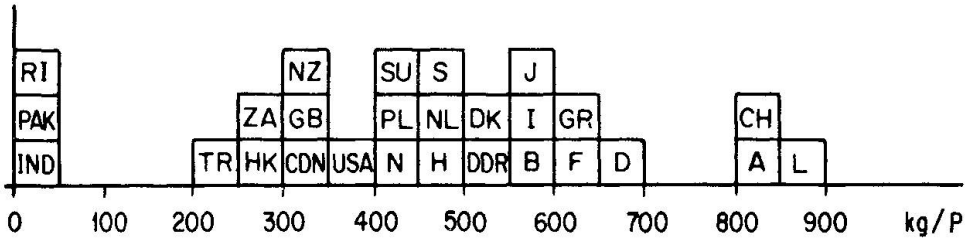

Fig.4: Per capita cement consumption in kg/cap.

cement consumption per head of population. The results of such weighting are shown in Fig. 5 and Fig. 6. The results show such striking differences that weighting in this way will be disregarded. The age of a code also plays a role. Fig. 7 gives the year in which every code was introduced. The difference is noted between codes based on working stresses and codes based on limit or ultimate states. The modern codes are mainly the latter and it is clear, that the safety concepts referred to in the codes differ so much, safe-

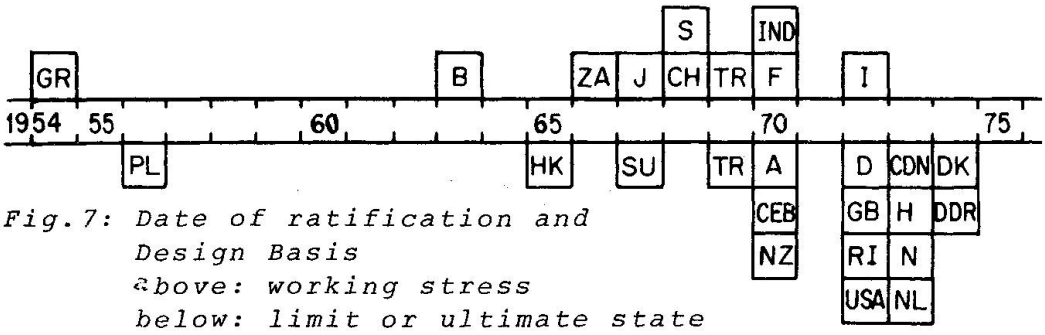

Fig.7: Date of ratification and Design Basis
above: working stress
below: limit or ultimate state

ty margins are hidden in so many different places, that a comparable representation must be limited to "permissible loading" of columns under working conditions.

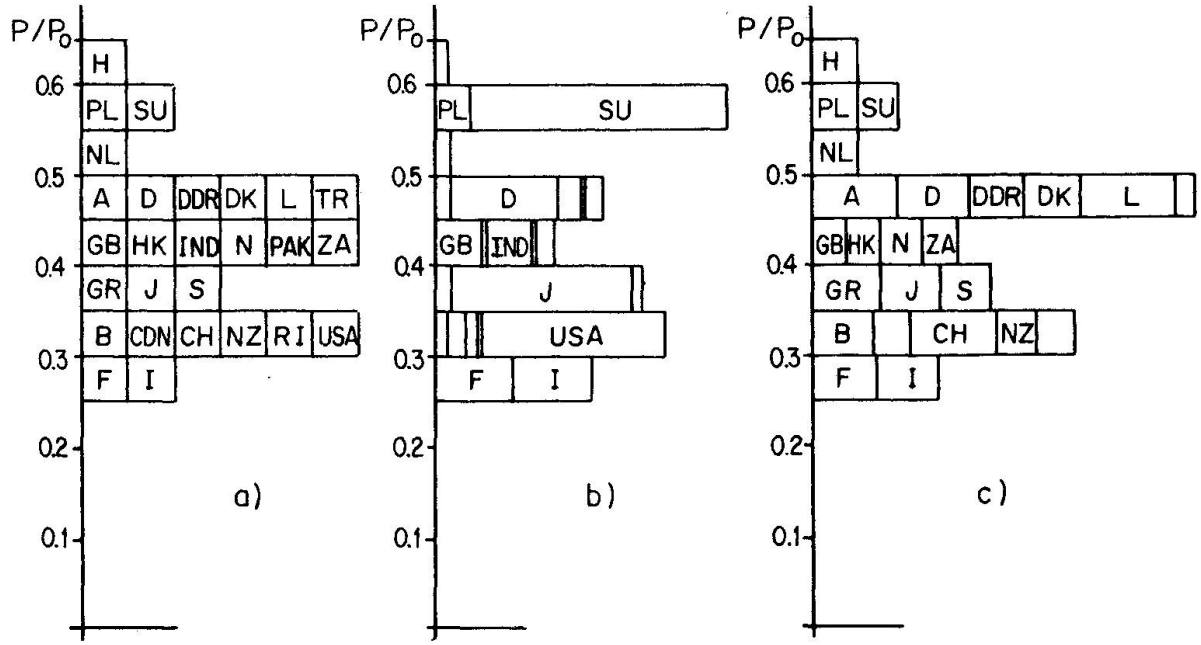

Fig.5: Permissible axial load of cross section
a) unweighted
b) weighted by total cement consumption
c) weighted by cement consumption per capita

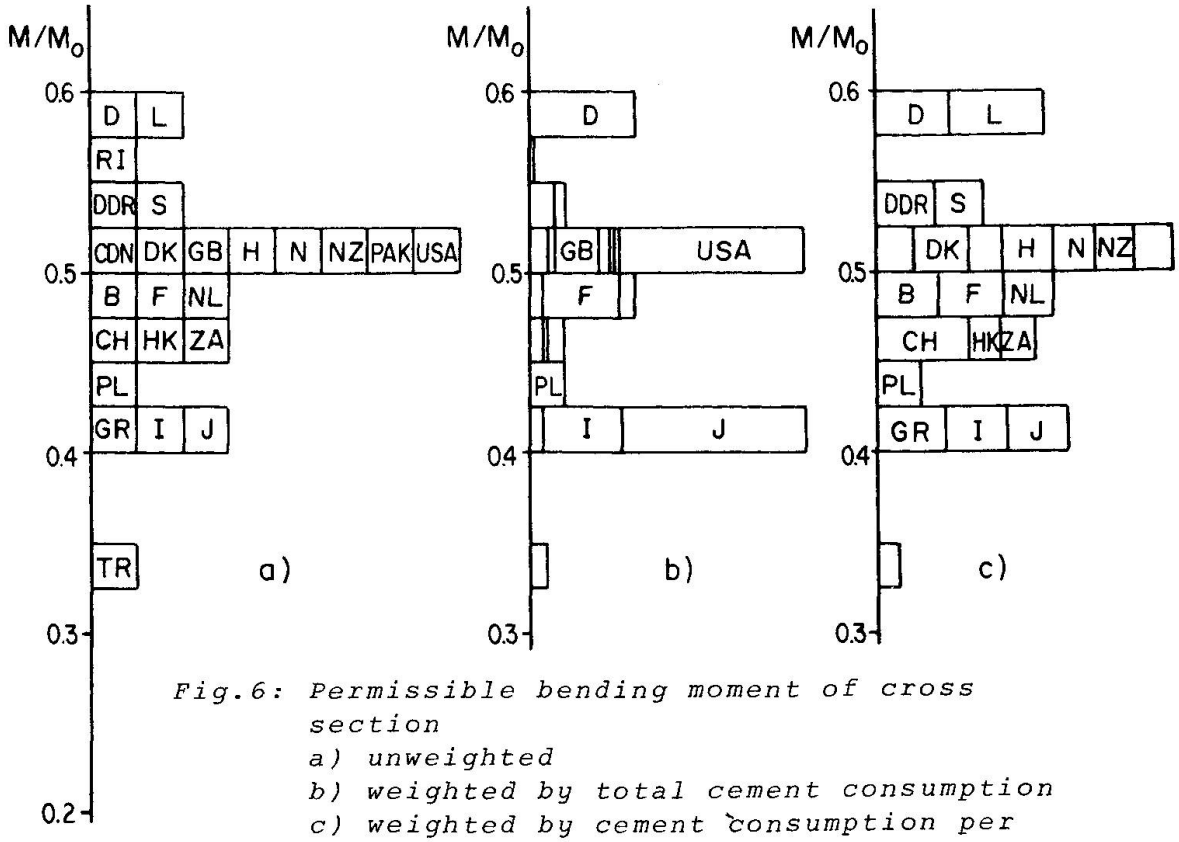

Fig.6: Permissible bending moment of cross section
a) unweighted
b) weighted by total cement consumption
c) weighted by cement consumption per capita

4. COMPARISON OF RESULTS

4.1 General

The enquiry is for the reinforced cross section in Fig. 8 and the column with articulated joints at each end. The building materials are defined as below:

Concrete (in situ concrete, maximal grain ∿ 30 mm)

Cube compressive strength (mean)	f_c=330 kp/cm²=4694 psi =3,24 kN/cm²
Cylinder or prism compressive strength 2·ø = h (mean)	f_c=270 kp/cm²=3840 psi =2,65 kN/cm²
Coefficient of variation	10%
Dosage of cement	300 kg/m³
Water-cement ratio	0,5
Maximal grain	30 mm

Reinforcement (well deformed bars, Diameter ∿ 20 mm)

Yield strength (mean) σ_y=5000 kp/cm²=71'117 psi = 49,05 kN/cm²
Tensile strength (mean) 5600 kp/cm²=79'650 psi = 54,94 kn/cm²
Coefficient of variation 5%
Minimum values = 0.85·mean values

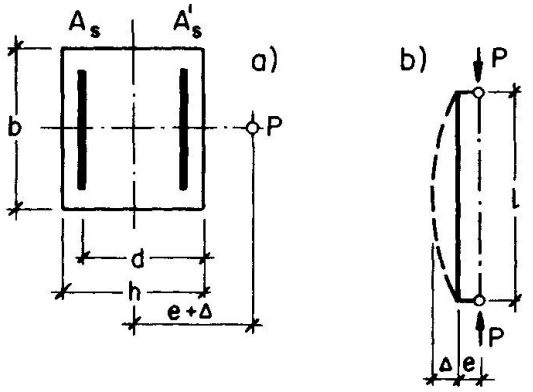

b = 40cm = 15.75 in
h = 35 cm = 13.78 in
d = 31.5cm = 12.40 in
$A_s = A'_s$, A_c = 1400 cm² = 217 si
if not noted otherwise: $p = \frac{A_s + A'_s}{bh} = 1.71\%$

Fig.8: Cross Section and end conditions of column

The following references are introduced in order to allow a dimensionless layout of the results:

Po = $0{,}8 \cdot f_c \cdot A_c$ = 370'000 kp = 370 Mp = 3630 kN = 815 kip
Mo = $0{,}9 \cdot \sigma_y \cdot A_s \cdot d$ =1700'000 cmkp = 17 Mpm = 167 kNm = 1500 kipin
λ = 1/0,289·h = 3,46·1/h

4.2 Resistance of cross-section

Fig. 9 shows the P-M-Interaction diagram for the ultimate or limit state of the given cross-section. The dimensionless layout enables the transfer of the results also to other similar cases. While the various codes are fairly close to each other for pure bending (P=0) this is by no means the case for axial loads (M=0). This leads to the conclusion that the definition of ultimate strength of a section specified in the various codes includes safety factors. The line entitled "exact solution" comes from a very close Computer calculation.

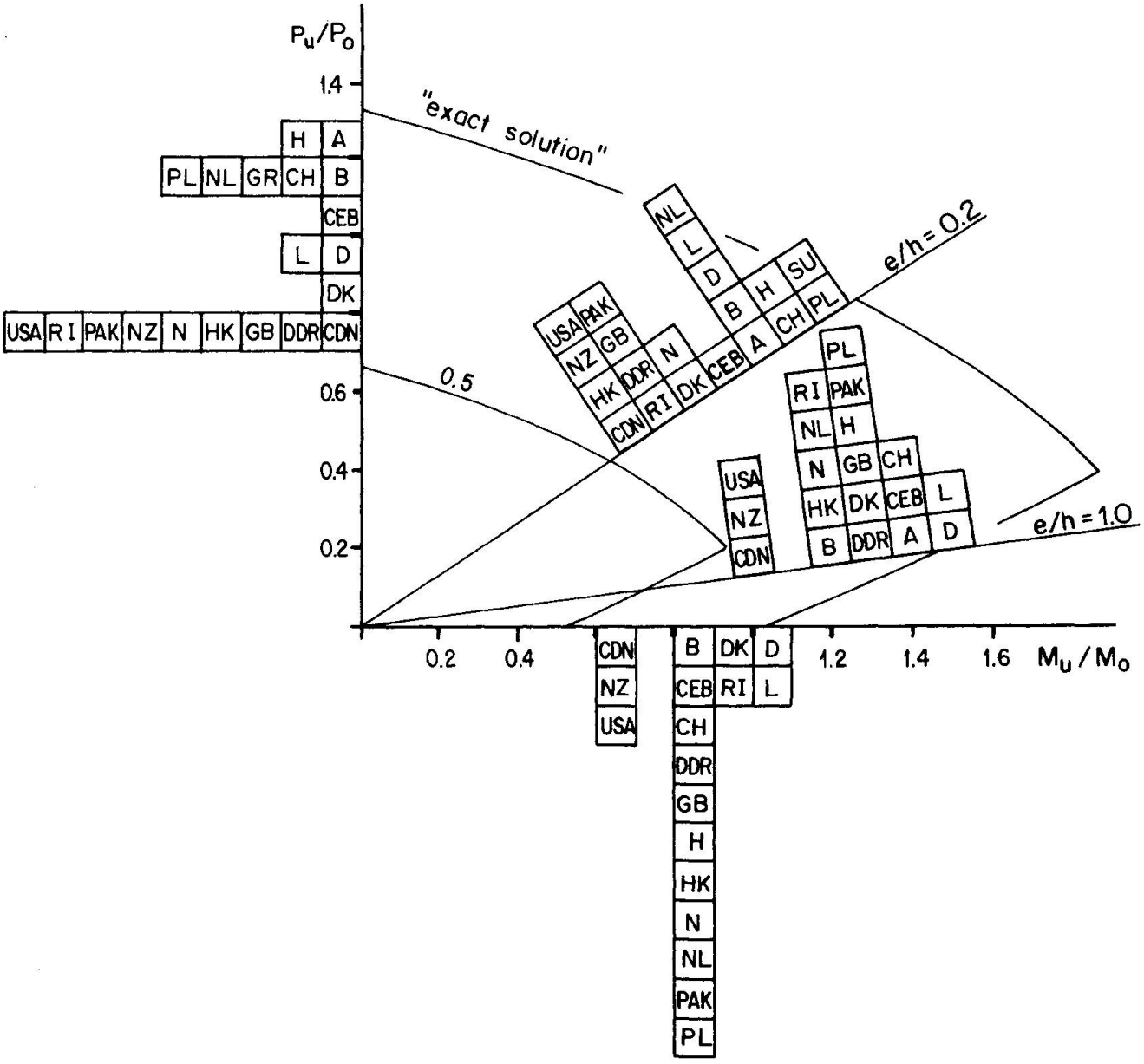

Fig.9: Ultimate strength interaction curve of cross section

Fig. 10 shows an analogous inter-action diagram for the permissible loading. The differences are again considerable, and show up differences in the required safety factor. There is an interesting development of two groups for the eccentricity e/h=1. The "outer-

lying" countries base their values practically exclusively on a limit or ultimate state design, whereas the "inner lying" countries almost exclusively use "working stress design". The use of "working stress design" leads apparently to greater safety in this region.

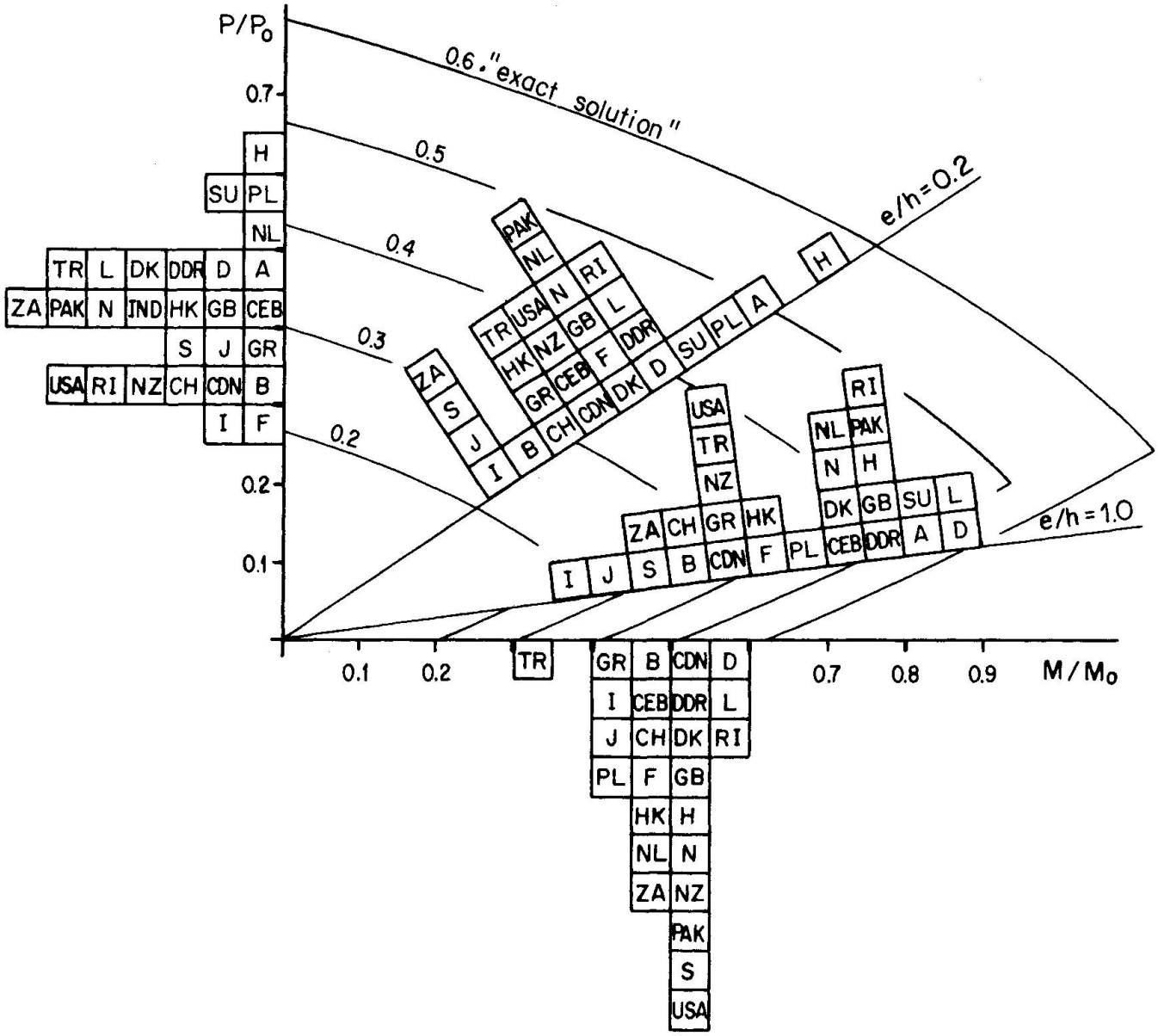

Fig.10: Interaction curve for permissible loading of cross section

Fig. 11 shows that different safety factors have already been included in the definition of the ultimate state. The differing safety factors are again partly compensated by the introduction of different load factors, the permissible values being less widely scattered than the values for the ultimate or limit state approach. (Load factors had to be introduced in evaluating the answers of SU and N. Because of lack of information, the factor 1,4 has been assumed for Live-Load and of 1,1 for Dead-Load, the latter in case of SU.)

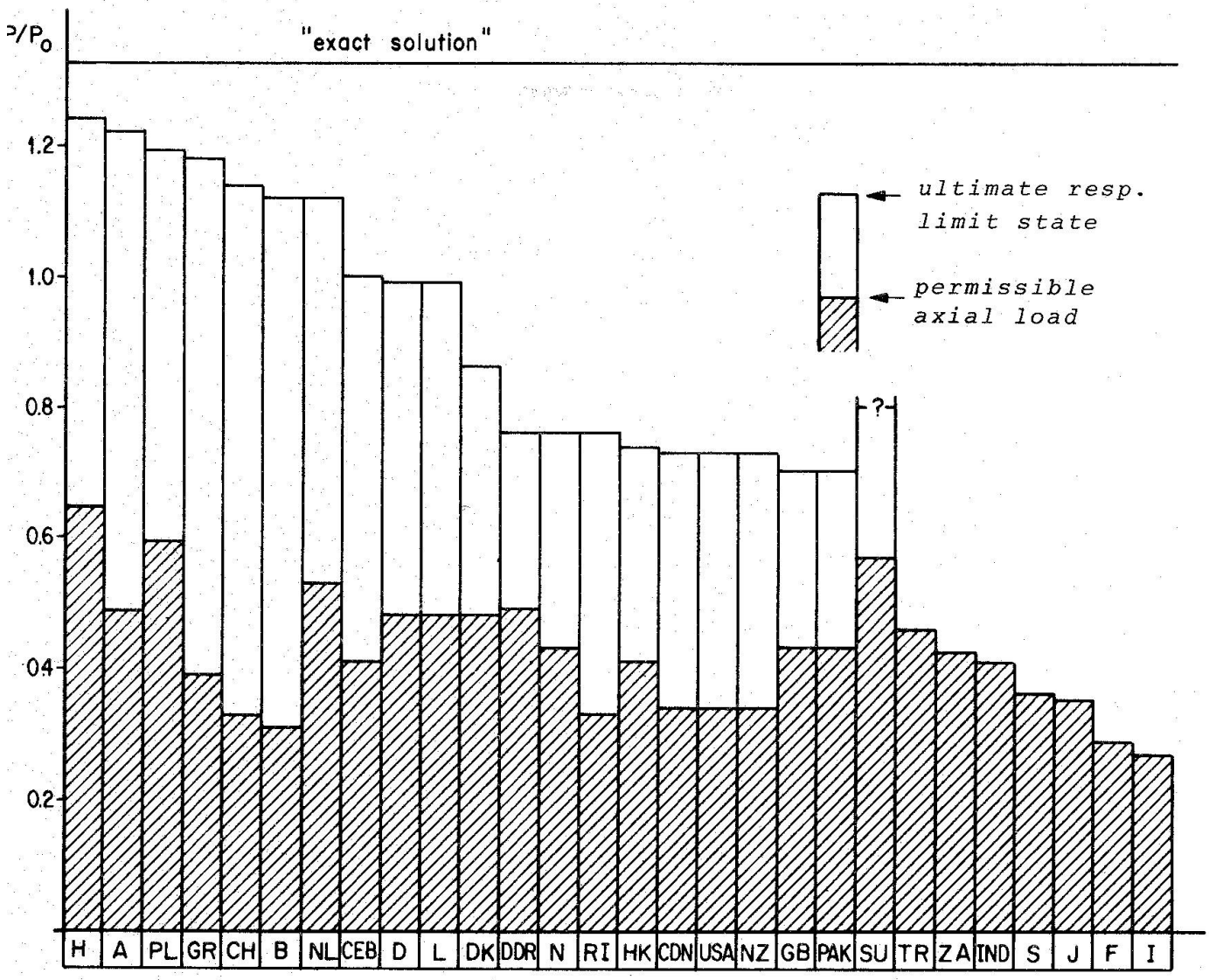

Fig.11: Axial load on cross section

4.3 Slender Columns under axial and eccentric loading

The present comparison shows in principle the permissible load as a function of the eccentricity e/h as well as of the slenderness ratio $\lambda = l/r$. This interaction surface is shown in Fig. 12 (isometrically and in a contour-plan). The interaction surface relates to a specific ratio of reinforcement. A higher ratio leads as a rule to a higher surface.

The interaction surface is therefore given by the value P/P_0 for a certain amount of fixed values (λ/e/h)

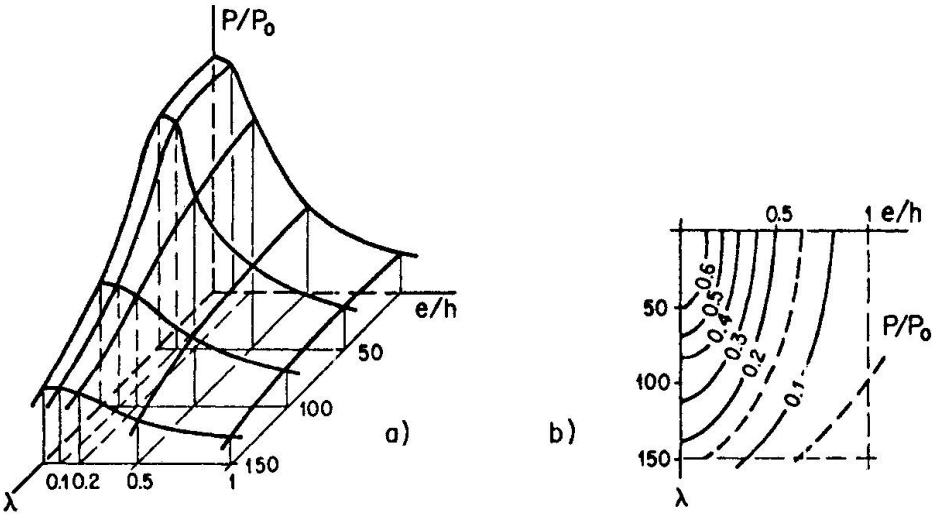

Fig.12: Interaction-Surface of P/Po as function of Slenderness ratio λ and excentricity e/h
a) Isometric projection
b) contour-plan

4.3.1 *Axial Buckling under short term loads*

In case of theoretically axially loaded columns the ratio P/P_0 depends only on the slenderness ratio of the column (e/h=0). Fig.13 shows this dependence for $A_s = A_s' = 12$ cm^2 equivalent to a reinforcement ratio of $p_t = 2 \times 12/35 \times 40 = 1.71\%$. Furthermore, λ is limited in most of the codes. The corresponding values are shown in Fig. 14.

The dependence of the ratio P/P_0 on p_t can be obtained from Fig.15. Most codes prescribe a minimum for the reinforcement ratio. Fig.16 shows the corresponding values for various slendernesses.

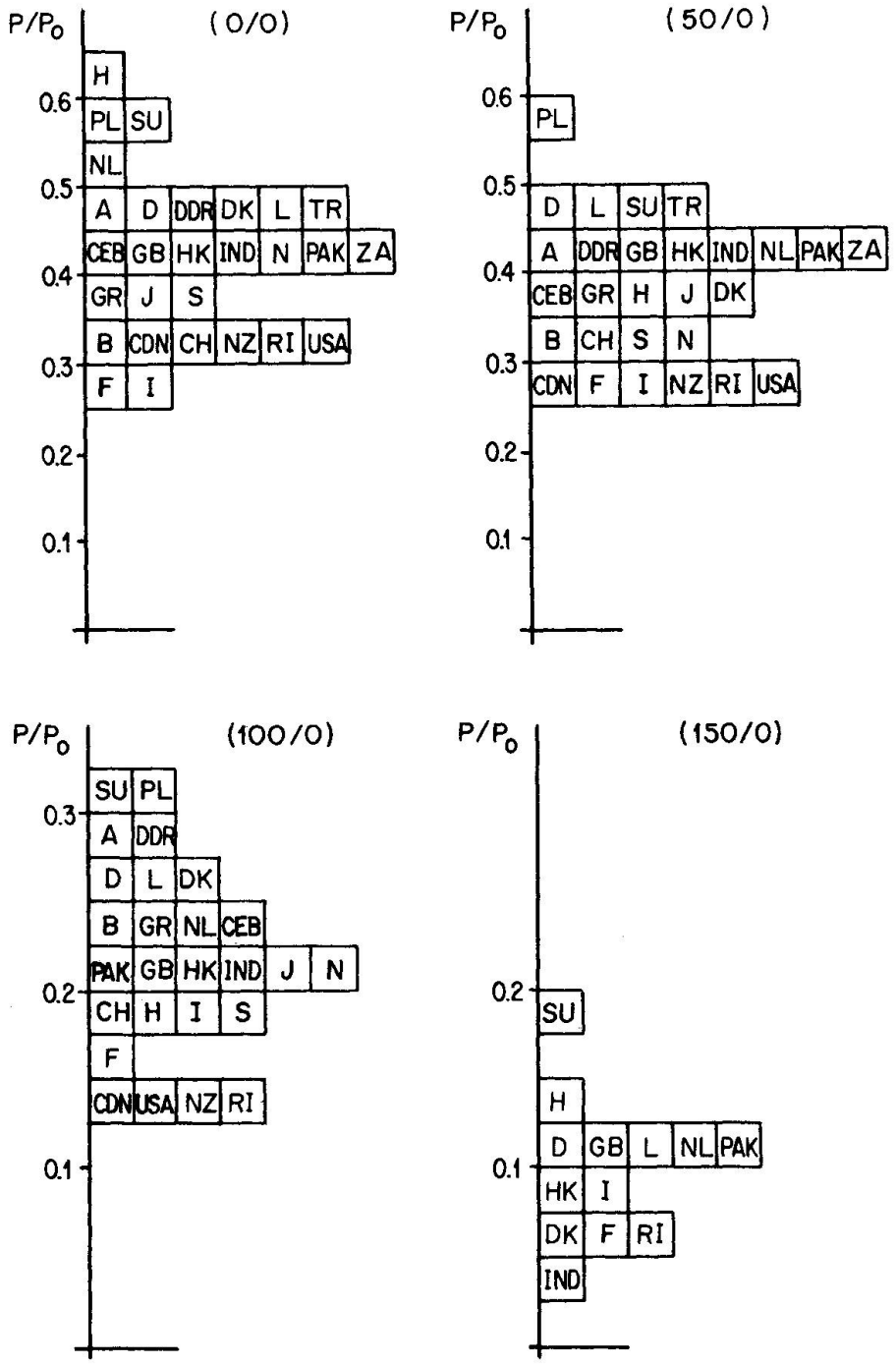

Fig.13: Permissible axial load as function of Slenderness ratio λ

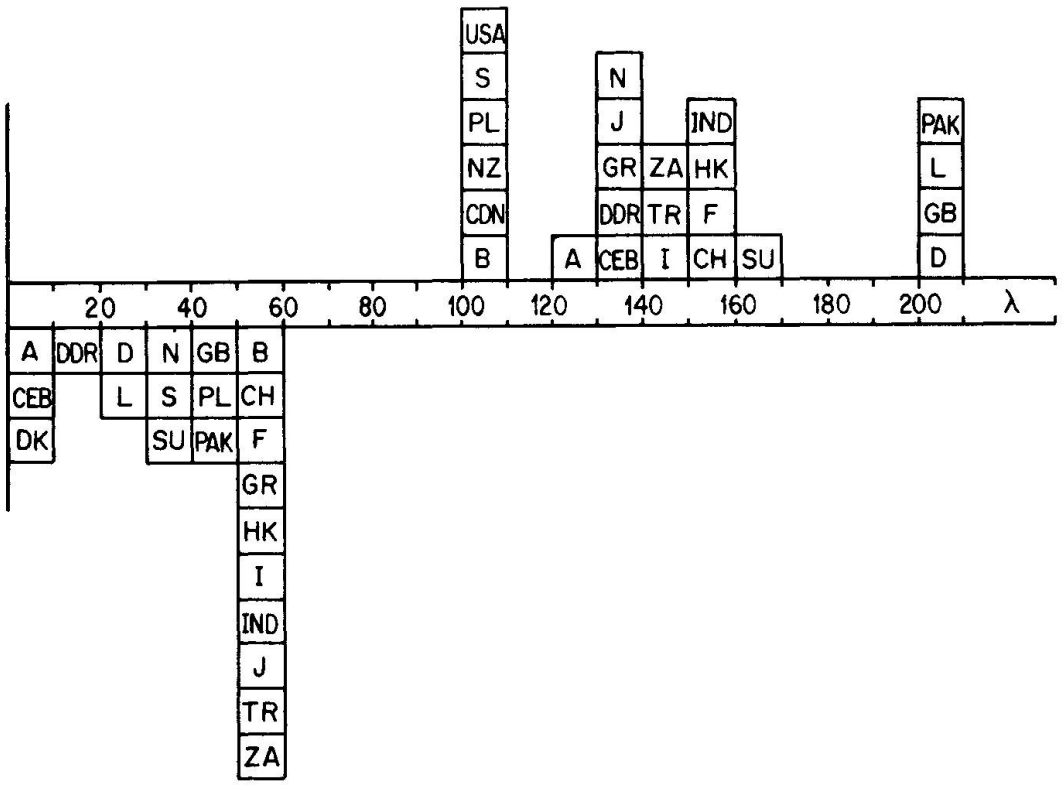

Fig.14: Limitation of Slenderness ratio λ
above: Permissed maximum Slenderness ratio λ
below: Maximum Slenderness ratio λ for which effects of slenderness may be neglected in design

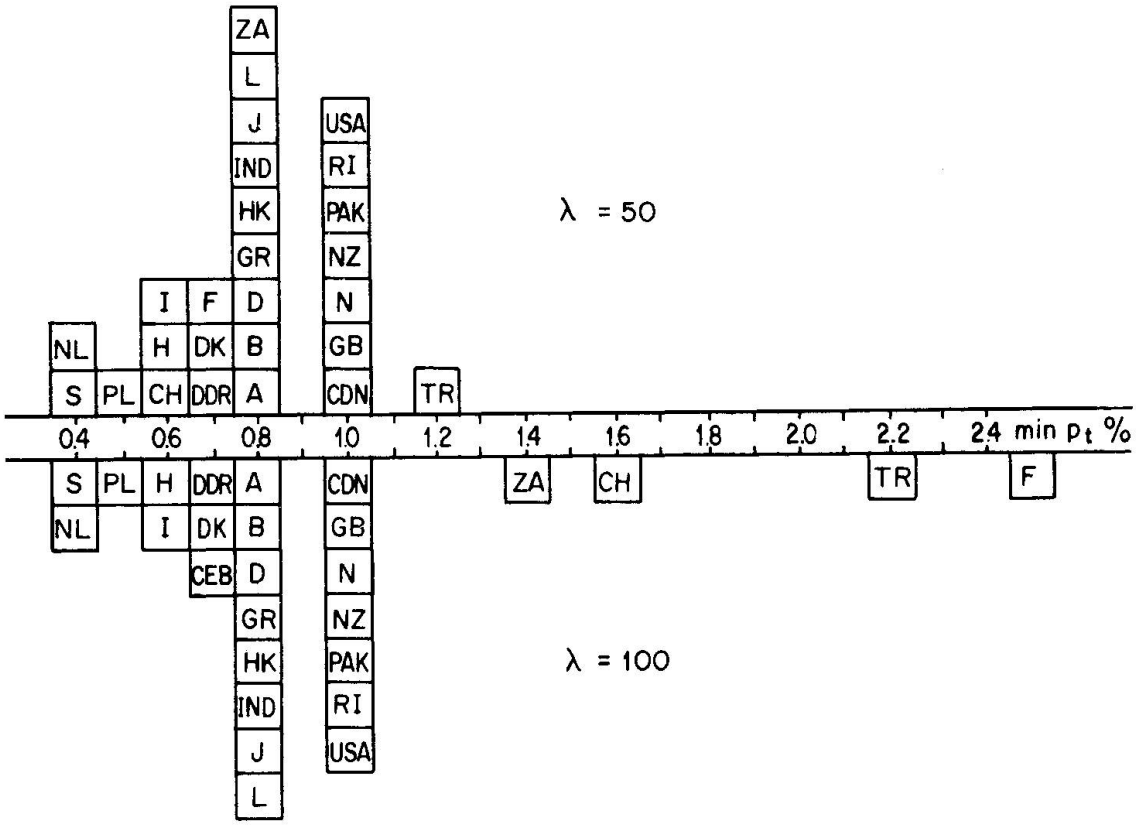

Fig.16: Required minimum reinforcement ratio

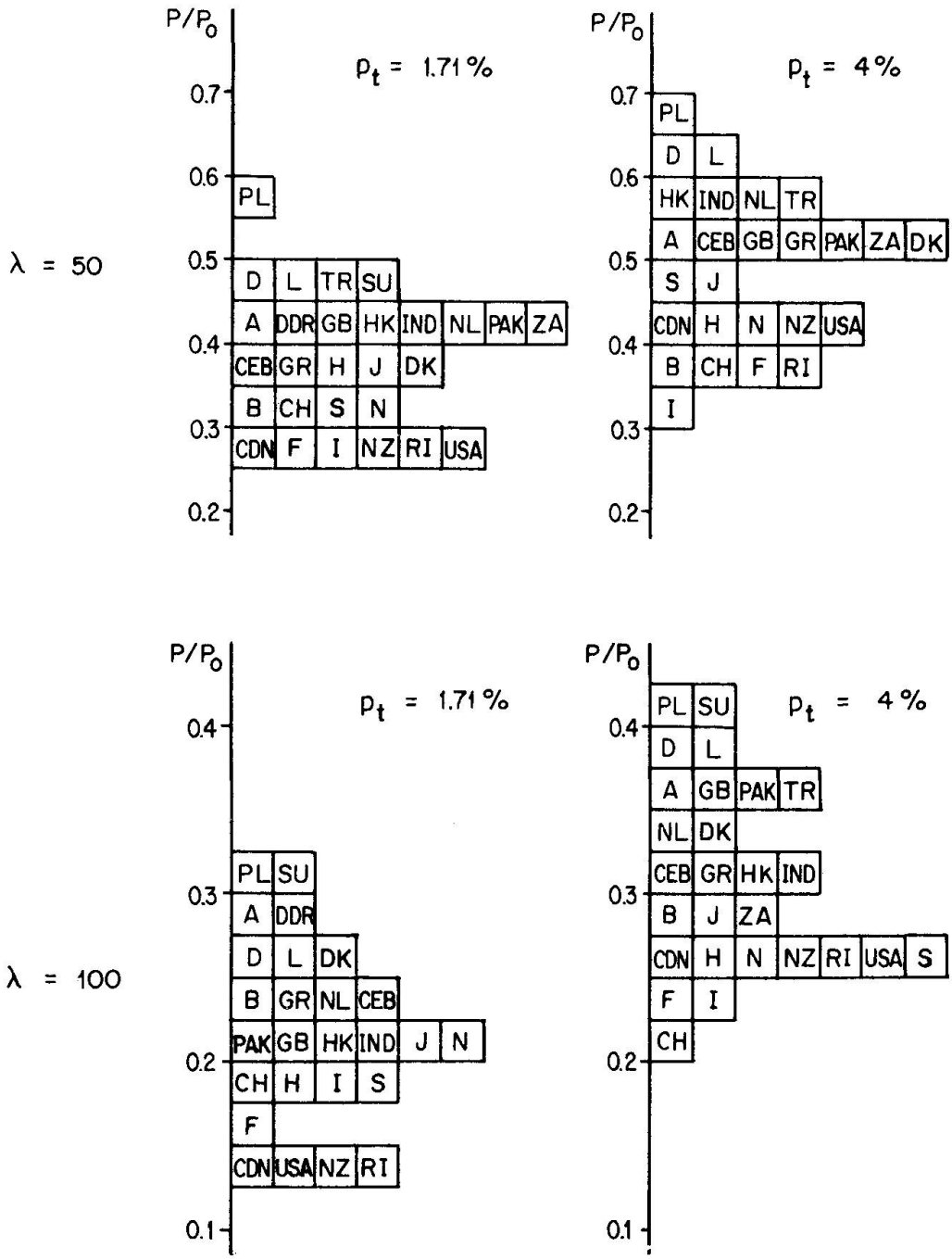

Fig.15: Influence of reinforcement ratio on permissible axial load

4.3.2 *Eccentrically loaded slender columns*

Second order deformation plays a decisive role in the case of eccentrically loaded slender columns. This influence is considered in almost all codes, but in very different ways. Fig. 17 shows for different ratios ($\lambda/e/h$) the permissible short term loads according to the various codes. All values here are also divided by P_0. The permitted maximum slenderness ratio is reduced in many countries in the case of eccentric loading.

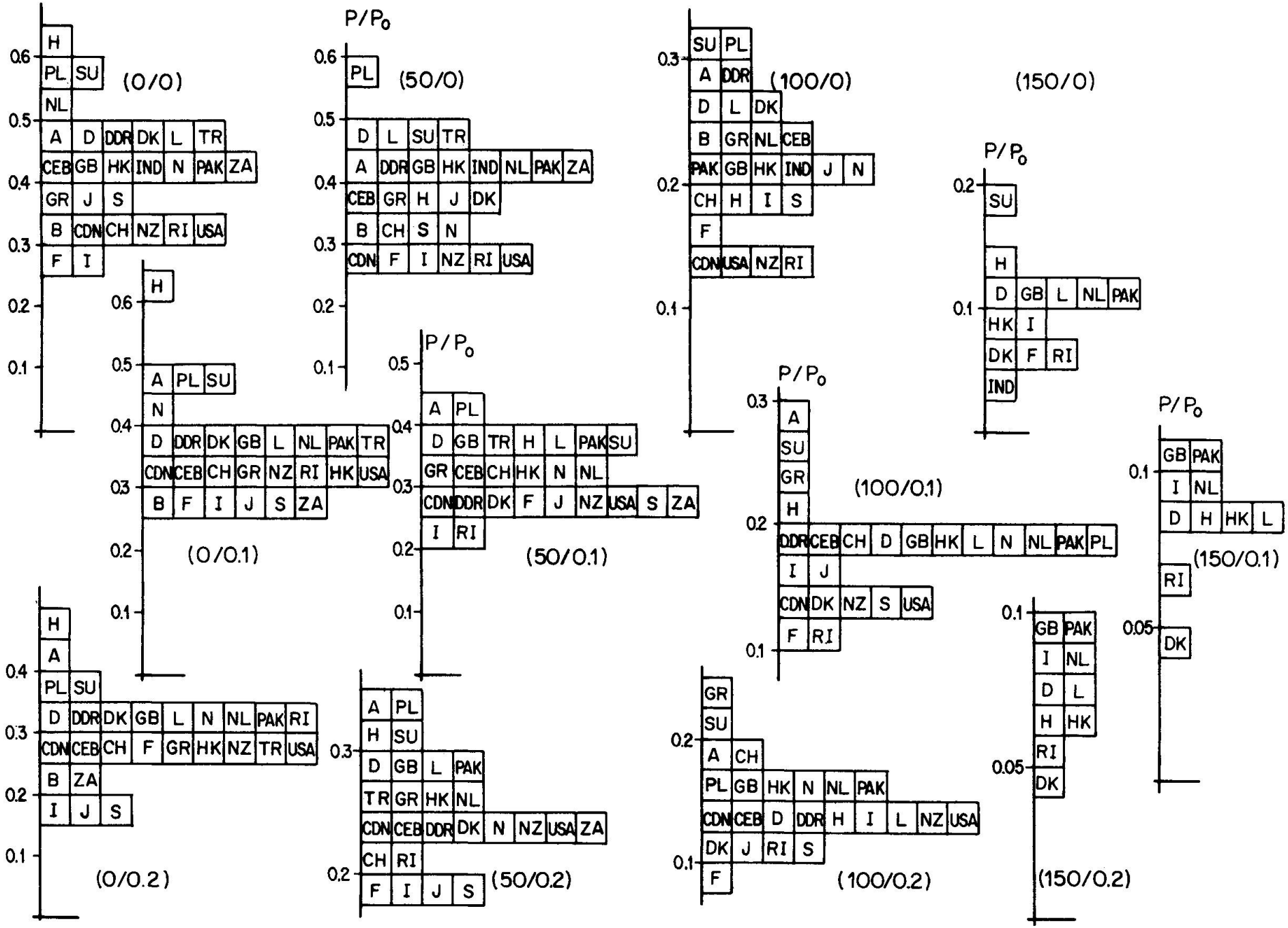
P/P0
(0/0)
(50/0)
(100/0)
(150/0)
(0/0.1)
(50/0.1)
(100/0.1)
(150/0.1)
(0/0.2)
(50/0.2)
(100/0.2)
(150/0.2)

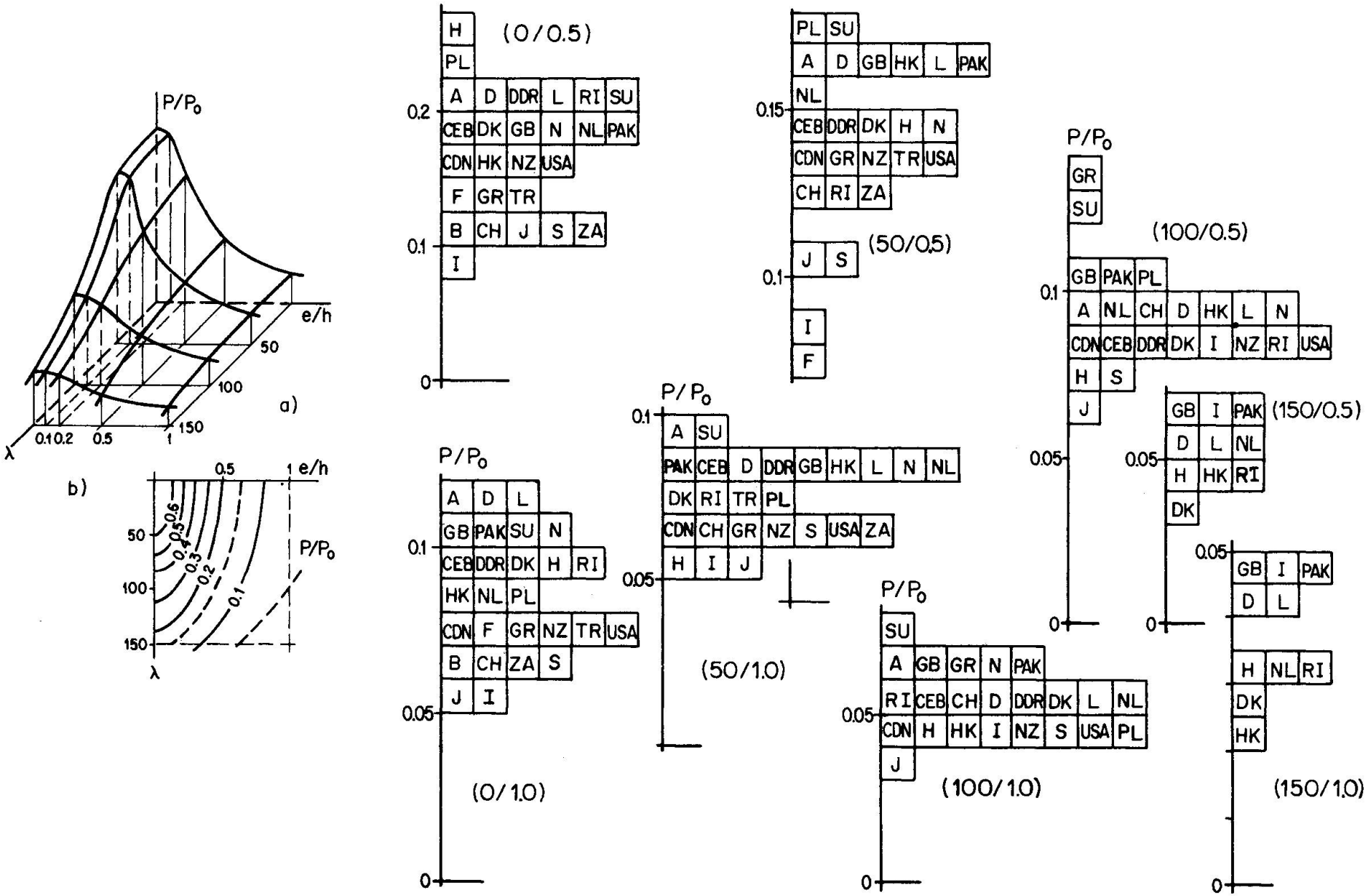

Fig.17: Permissible short term (live load) load for different slendernesses λ and excentricities e/h

4.3.3 *The influence of long term sustained loading*

The anticipated deformation and also those of 2nd order will increase due to the creep deformations of concrete under sustained loads. From this it can be inferred that the permissible long term loads $P\phi$ will be smaller than the permissible short term loads P. This is taken into account only by those codes which show in Fig. 18 a ratio $P\phi/P<1$. It is surprising that for some countries the ratio is >1.

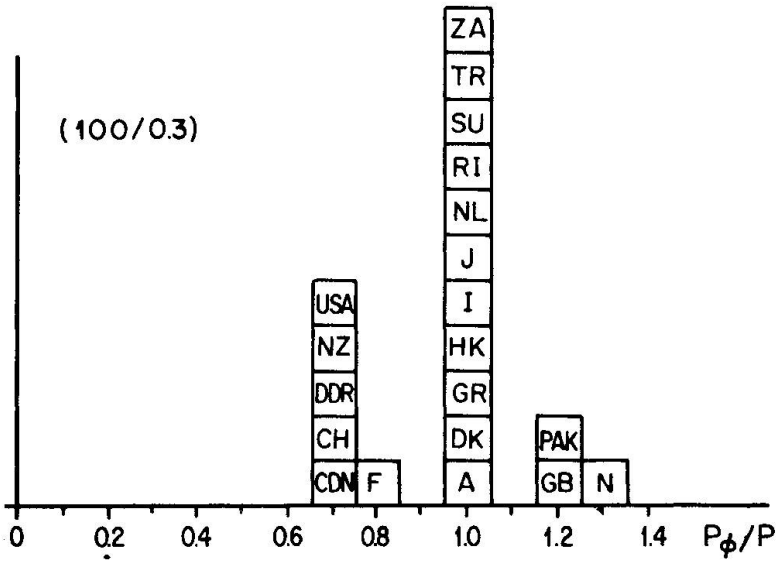

Fig.18: Ratio of permissible sustained to permissible short term load for small excentricities

Hence the permissible value for long term loads is greater than for short term loads. The reason for this contradictory result lies in the applied safety concept: The load factor for long term loads (set equal to dead load) is in these codes considerably less than that for short term loads (set equal to life load).

4.4 Further questions

The questionnaire included a series of further questions, especially concerning construction details. One group of questions referred to spiral columns. An attempt was made to draw conclusions, but the result was not fruitful so that this subject was dropped.

SUMMARY

A comparative study of the results obtained from different codes shows up unexpected great differences. These are due firstly to the differences in the design basis (working stress, ultimate state, limit state design). The comparison brings to light also differences in the required standards of safety. A unification of the codes should be attempted for both these cases.

Further differences also arise from the different methods employed in the way 2nd order deformation is taken into account. Also the introduction of arbitrary values for undesired eccentricity leads to differences in the results, especially for small eccentricities.

All members of IABSE who have answered the questionnaire have made it possible to present this valuable comparison. We thank them for their cooperation.

RESUME

L'étude comparative des charges admissibles obtenues en application des divers réglements de construction présente de grandes différences inattendues. Celles-ci sont dues en premier abord aux différents modes de dimensionnement eux-mêmes: contraintes admissibles, état ultime, états limites. La comparaison fait apparaître aussi des différences dans le niveau de sécurité requise. Une unification des règlements de construction devrait être tentée dans les deux cas.

D'autres différences découlent des diverses méthodes tenant compte des déformations du second ordre. L'introduction de valeurs arbitraires pour l'excentricité non désirée conduit également à des résultats divergents, particulièrement pour de faibles excentricités.

Nous remercions tous les membres de l'AIPC qui, en répondant au questionnaire, ont rendu possible cette étude comparative et intéressante.

ZUSAMMENFASSUNG

Eine vergleichende Auswertung der nach verschiedenen Normen vorausgesagten zulässigen Beanspruchungen deckt unerwartet grosse Unterschiede auf. Diese sind in erster Linie auf die unterschiedliche Bemessungsbasis (zul. Spannungen, Bruchzustand, Grenzzustände) zurückzuführen. Der Vergleich bringt aber auch Unterschiede im geforderten Sicherheitsniveau ans Tageslicht. Eine Vereinheitlichung der Normen müsste an diesen beiden Stellen ansetzen.

Weitere Unterschiede haben sodann ihren Ursprung in verschiedenen Methoden, die Verformungen 2. Ordnung zu erfassen. Auch die Einführung willkürlicher Werte für die ungewollten Exzentrizitäten führt zu Abweichungen im Ergebnis, insbesondere bei kleinen Exzentrizitäten.

Abschliessend sei allen Mitgliedern der IVBH gedankt, deren Arbeit an der Beantwortung des Fragebogens diesen zweifellos wertvollen Vergleich ermöglicht hat.

IABSE Headquarters

Prof. J. Schneider
General Secretary