Zeitschrift: IABSE reports of the working commissions = Rapports des commissions de travail AIPC = IVBH Berichte der Arbeitskommissionen

Band: 5 (1970)

Artikel: Time-dependent deformation in prestressed concrete

Autor: Saeed, M.A. / Kennedy, J.B.

DOI: https://doi.org/10.5169/seals-6926

Nutzungsbedingungen

Die ETH-Bibliothek ist die Anbieterin der digitalisierten Zeitschriften auf E-Periodica. Sie besitzt keine Urheberrechte an den Zeitschriften und ist nicht verantwortlich für deren Inhalte. Die Rechte liegen in der Regel bei den Herausgebern beziehungsweise den externen Rechteinhabern. Das Veröffentlichen von Bildern in Print- und Online-Publikationen sowie auf Social Media-Kanälen oder Webseiten ist nur mit vorheriger Genehmigung der Rechteinhaber erlaubt. Mehr erfahren

Conditions d'utilisation

L'ETH Library est le fournisseur des revues numérisées. Elle ne détient aucun droit d'auteur sur les revues et n'est pas responsable de leur contenu. En règle générale, les droits sont détenus par les éditeurs ou les détenteurs de droits externes. La reproduction d'images dans des publications imprimées ou en ligne ainsi que sur des canaux de médias sociaux ou des sites web n'est autorisée qu'avec l'accord préalable des détenteurs des droits. En savoir plus

Terms of use

The ETH Library is the provider of the digitised journals. It does not own any copyrights to the journals and is not responsible for their content. The rights usually lie with the publishers or the external rights holders. Publishing images in print and online publications, as well as on social media channels or websites, is only permitted with the prior consent of the rights holders. Find out more

Download PDF: 09.01.2026

ETH-Bibliothek Zürich, E-Periodica, https://www.e-periodica.ch

Time-dependent Deformation in Prestressed Concrete

Déformation dépendant du temps dans le béton précontraint

Zeitabhängige Verformung im Spannbeton

M.A. SAEED
M.A.Sc., Research Assistant

J.B. KENNEDY
Ph.D., Professor and Department Head

Department of Civil Engineering, University of Windsor, Windsor, Ont., Canada

1. INTRODUCTION

A fictitious modulus of elasticity for concrete was first introduced by Dischinger [1], and was later revised by Fritz [2] who included the effect of reinforcing. The application of this fictitious modulus of elasticity and the two-fibre method of Busemann [3] and Habel [4] lead to the determination of rotation and deflection of a section in a prestressed concrete structure. In this work the effect of creep and shrinkage of concrete on deformation is taken into account in such a way that the resulting deformations are in terms of initial design parameters.

A time-dependent modulus of deformation E_e is introduced which accounts for deformation and hence stress redistribution due to creep in the concrete. Thus, such modulus of deformation can be utilized together with initial material and geometrical properties and initial moments to yield rotations and deflections. The use of E_e may be also extended to treat more realistically stability problems which would involve, in general, orthotropic analysis.

2. ANALYTICAL APPROACH

The derivation of an expression for the effective modulus of elasticity is based mainly on Busemann's two fibre method [3], [4] as applied to simply supported beams. It is assumed that: For short term loading the modulus of elasticity of concrete, E_{c0}, remains constant; plane sections remain plane after deformation; creep deformation is linearly proportional to the stress level i.e. it follows hooke's law; curves of creep factor versus time and shrinkage strain

versus time are similar to one another; and, in multi-layer prestressing (more than two layers of steel) the stresses in the various layers are linearly related.

2.1. THEORETICAL BACKGROUND

Considering a cross-section of a prestressed concrete beam such as shown in Fig. 1, a bed-force F_1^o (or an external force) is applied at point P_1 of such magnitude that the resulting stress at point P_2 is zero. Let the component of F_1^o carried by the concrete be denoted by F_{c1}. If y_{c1} is the distance from the point of application of F_{c1} to the centroid of the concrete, c.g.c., then y_{c2}, the distance of the fibre with zero stress to c.g.c., is found from:

$$\frac{y_{c1}F_{c1}}{I_c}y_{c2} - \frac{F_{c1}}{A_c} = 0. \quad \text{With } I_c = A_c r_c^2, \text{ it follows that } y_{c1}y_{c2} = r_c^2$$

where A_c is the concrete cross-sectional area and r_c is the radius of gyration of the concrete about the c.g.c. y_{c2} can also be found graphically [5]. By Betti's reciprocal theorem it can be readily observed that an external force F_2^a applied at P_2 will produce zero stress at P_1. Thus the fibres at P_1 and P_2 deform independently of each other, irrespective whether such deformations are elastic or plastic due to creep and shrinkage. From geometry, Fig. 1,

$$\sigma_{c1} = c\sigma_c/y_{c2} = cF_{c1}/A_c y_{c2}. \quad \text{Or } \sigma_{c1} = F_{c1}/A_{c1}$$

where $A_{c1} = A_c y_{c2}/c$ and $c = y_{c1} + y_{c2}$.

Similarly, for the force F_2^a applied at P_2 the stress at P_2 will be

$$\sigma_{c2} = F_{c2}/A_{c2} = F_2^a/A_{c2}, \text{ since } F_2^a = F_{c2} + F_{s2}(=0), \text{ where } A_{c2} = A_c y_{c1}/c.$$

It is evident that $A_{c1} + A_{c2} = A_c$. Thus the equivalent areas A_{c1} and A_{c2} are fractions of A_c distributed to points P_1 and P_2 according to the lever-arm principle. Whence the stresses can be readily computed when the concrete cross-section is visualized as two independent columns concentrically loaded. Furthermore, an applied moment, M^a, can be made equivalent to a couple of two equal but opposite forces acting at P_1 and P_2 with magnitude M^a/c.

Due to the presence of steel, the effective equivalent areas, A_{e1} and A_{e2}, and axial stiffness coefficients, α_1 and α_2 of the columns become:

For point P_1: $A_{c1} = A_c\, y_{c2}/c$, $A_{s1} = A_{sp}$, $A_{e1} = A_{c1} + nA_{sp}$,

$$\alpha_1 = \frac{E_s A_{s1}}{E_{c0}A_{c1} + E_s A_{s1}}$$

For point P_2: $A_{c2} = A_c y_{c1}/c$, $A_{s2} = 0$, $A_{e2} = A_{c2} + A_{s2} = A_{c2}$ (since $A_{s2} = 0$ in this case.) Putting $n = E_s/E_{c0}$ and $u_1 = A_{s1}/A_{c1}$, yield $\alpha_1 = \dfrac{n\,u_1}{1 + n\,u_1}$.

For the general case where there are a number of prestressing tendons as

well as non-tensioned steel in the section, Fig. 2, the following procedure is followed: Let E_{sp} = modulus of elasticity of prestressing steel; E_{s0} = modulus of elasticity of non-tensioned steel; $n_o = E_{s0}/E_{c0}$; $n_p = E_{sp}/E_{c0}$; $n_s = E_{sp}/E_{s0} \leq 1.0$

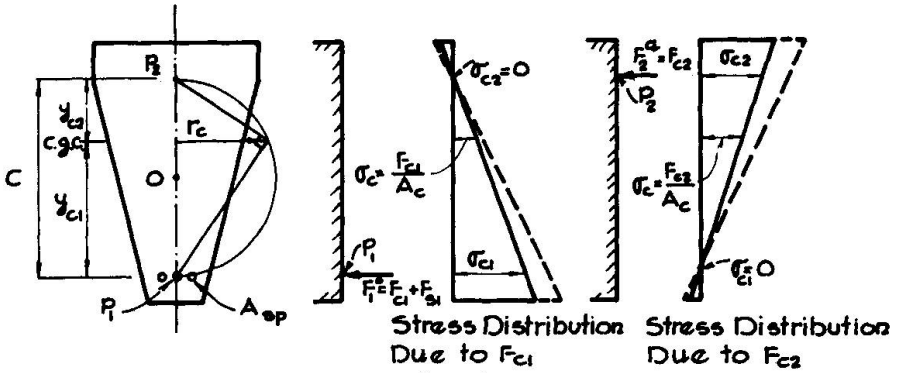

Fig. 1

(in case of wire-rope tendons); I_c = moment of inertia of concrete only about c.g.c.; I_s = moment of inertia of all steel about c.g.s. = $\Sigma n_s A_{sp} y_{sp}^2 + \Sigma A_{s0} y_{s0}^2$ where y_{sp} and y_{s0} are the distances of the individual prestressing and non-tensioned steels from the c.g.s.; and, total area of steel, $A_s = A_{s0} + n_s A_{sp}$, then $y_{c1} y_{c2} = r_c^2$ where $r_c^2 = I_c/A_c$, and $y_{s1} y_{s2} = r_s^2$ where $r_s^2 = I_s/A_s$.

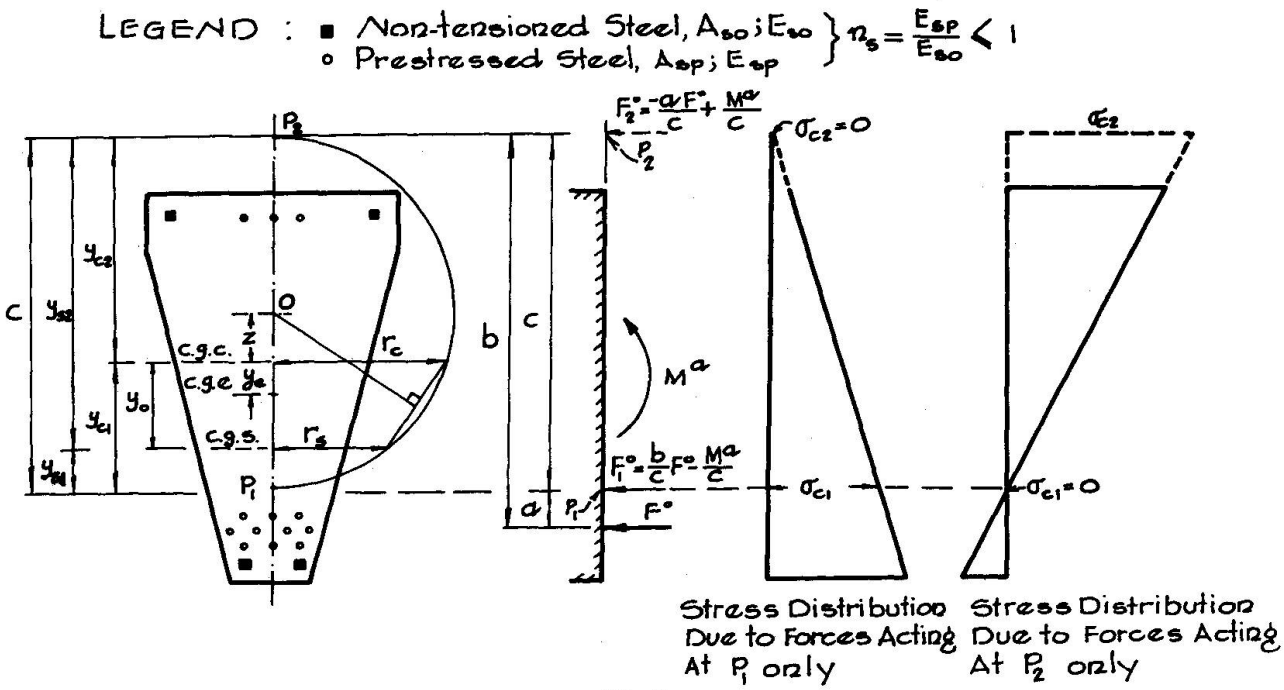

Fig. 2

y_{c1}, y_{c2}, y_{s1}, and y_{s2} can be obtained graphically [5], or by geometry from, for example:

$$y_{s1} = \frac{r_s^2 - r_c^2 - y_0^2}{2y_0} \pm \sqrt{r_s^2 + \left(\frac{r_s^2 - r_c^2 - y_0^2}{2y_0}\right)^2}$$

where y_0 is the distance between the c.g.c. and c.g.s.

Thus, considering the concept of concentrically loaded columns at P_1 and P_2, the expressions for the effective equivalent areas and stiffness coefficients are as follows:

For Point P_1: $A_{c1} = A_c y_{c2}/c$, $A_{sp1} = A_{sp}\, y_{s2}/c$, $A_{s01} = A_{s0}\, y_{s2}/c$,

$$A_{e1} = A_{c1} + n_0(A_{s01} + n_s A_{sp1}) = A_{c1} + n_0 A_{s1}$$

where $A_{s1} = A_{s01} + n_s A_{sp1}$

$$\alpha_1 = E_{s0}A_{s1}/(E_{c0}A_{c1} + E_{s0}A_{s1}) = n_0 u_1/(1 + n_0 u_1)$$

where $u_1 = A_{s1}/A_{c1}$.

For Point P_2: $A_{c2} = A_c y_{c1}/c$, $A_{sp2} = A_{sp} y_{s1}/c$

$$A_{s02} = A_{s0} y_{s2}/c, \quad A_{e2} = A_{c2} + n_0(A_{s02} + n_s A_{sp2}) = A_{c2} + n_0 A_{s2}$$

where $A_{s2} = A_{s02} + n_s A_{sp2}$

$$\alpha_2 = E_{s0}\, A_{s2}/(E_{c0}A_{c2} + E_{s0}A_{s2}) = n_0 u_2/(1 + n_0 u_2)$$

where $u_2 = A_{s2}/A_{c2}$.

Thus, referring to Fig. 2, $\sigma_{c1} = F_1^o/A_{e1}$ and $\sigma_{c2} = F_2^o/A_{e2}$. In general, one can write, for any one fibre, the stress at time t, accounting for creep, as $\sigma_{ct} = \sigma_{c0}\, e^{-\alpha\phi}$. Similarly, accounting for shrinkage in a creeping concrete section the stress at time t is given by $\sigma_{cs} = (1 - e^{-\alpha\phi})\, \varepsilon_s E_{c0}/\phi$

where ϕ is the creep factor and ε_s is the shrinkage strain. The strain in concrete will be increased under sustained stress due to creep phenomenon. Fritz [2] has accounted for this phenomenon by introducing fictitious moduli of elasticity accounting for stresses induced by sustained loads and shrinkage of concrete. For creep, he introduced $E_{cf} = \alpha E_{c0}/(\alpha + e^{\alpha\phi} - 1) = E_{c0}\beta$

where $\beta = \alpha/(\alpha + e^{\alpha\phi} - 1)$. Fig. 3 gives values of β for various ϕ and α. Similarly, for shrinkage in a creeping concrete section, Fritz gave the following expression for the fictitious modulus of elasticity,

$$E_{cfs} = E_{c0}/[1 + \phi e^{\alpha\phi}/(e^{\alpha\phi} - 1) - 1/\alpha].$$

2.2 REDUCTION FACTORS DUE TO CREEP AND SHRINKAGE

The strain at any fibre of a section subjected to sustained loading can be expressed as:

$$\varepsilon_{ct} = \sigma_{ct}/E_{cf} \quad \text{or} \quad \varepsilon_{ct} = \sigma_{c0}/\gamma E_{c0}$$

where $\gamma = \alpha/(1 - e^{-\alpha\phi} + \alpha e^{-\alpha\phi})$. One can, therefore, define the effective modulus of elasticity of the fibre at time t in the following manner: $E_e = E_{c0}\gamma$

γ, being the reduction factor for the short-term-loading modulus of elasticity

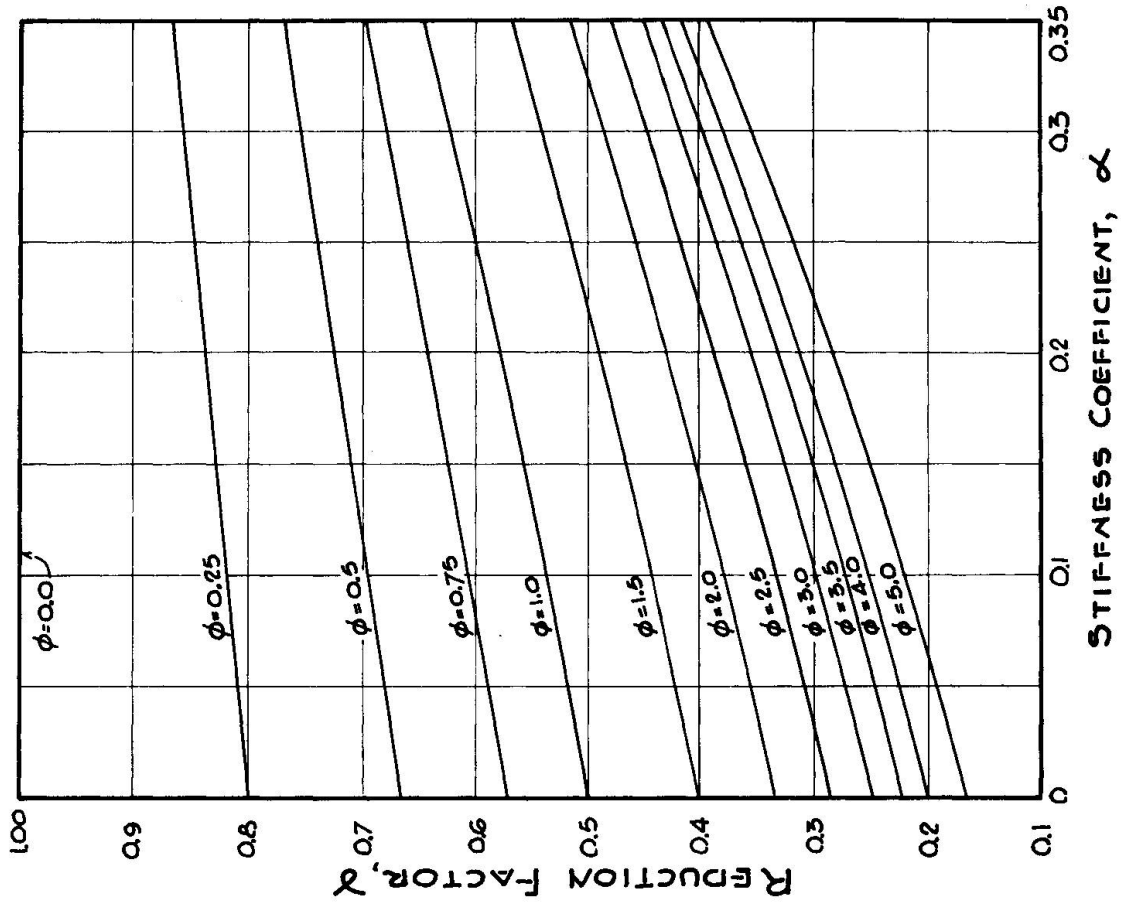
Reduction Factor, γ
Stiffness Coefficient, α
φ=0.0
φ=0.25
φ=0.5
φ=0.75
φ=1.0
φ=1.5
φ=2.0
φ=2.5
φ=3.0
φ=3.5
φ=4.0
φ=5.0

Fig. 4

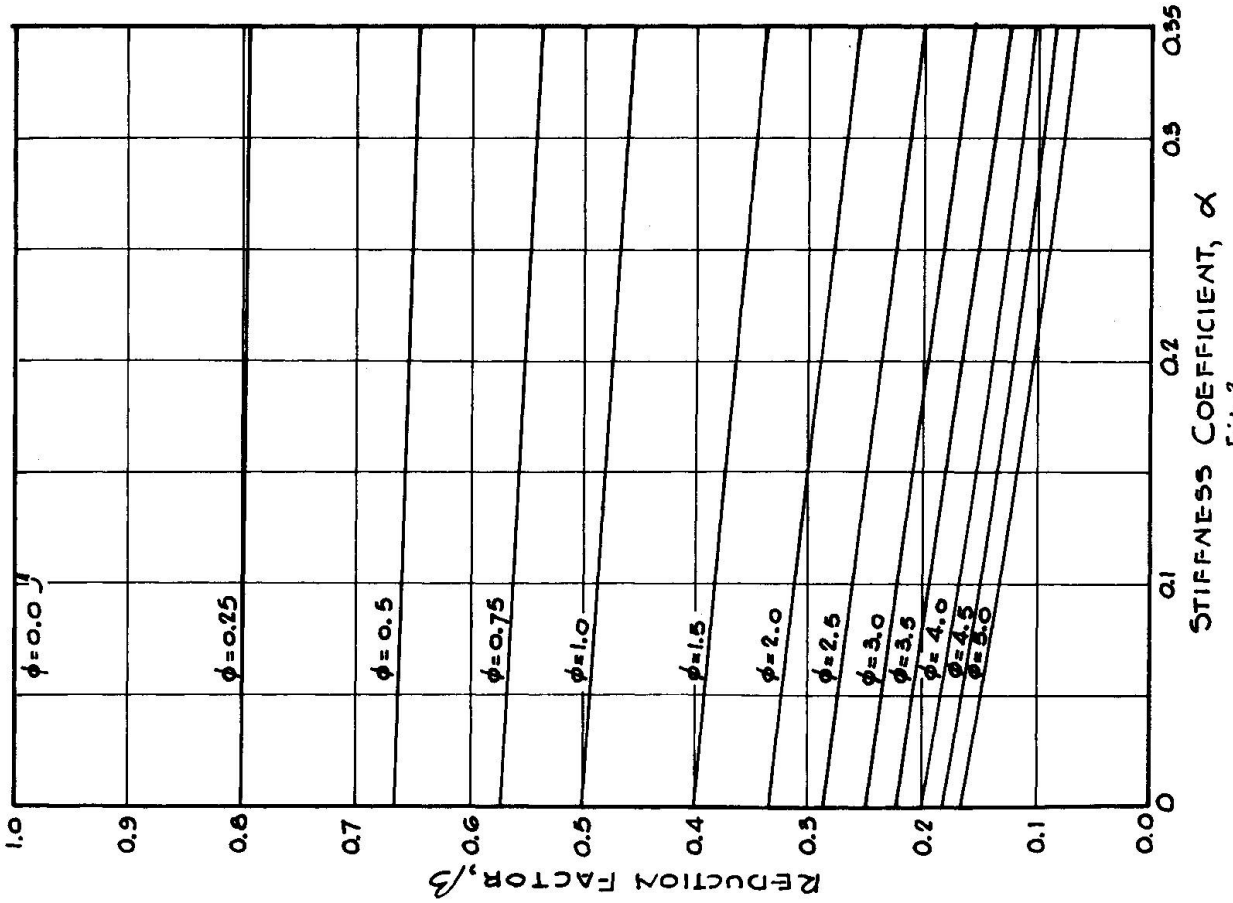
Reduction Factor, β
Stiffness Coefficient, α
φ=0.0
φ=0.25
φ=0.5
φ=0.75
φ=1.0
φ=1.5
φ=2.0
φ=2.5
φ=3.0
φ=3.5
φ=4.0
φ=4.5
φ=5.0

Fig. 3

due to creep; values of γ for various ϕ and α are shown in Fig. 4. It should be noted that since α in general varies from fibre to fibre, so does γ.

The constraining shrinkage strain in a concrete fibre due to the presence of reinforcing is defined as $\varepsilon_{st} = \sigma_{cs}/E_{cfs}$. The net remaining strain is

$$(\varepsilon_s - \varepsilon_{st}) = \varepsilon_s \eta$$

where $\eta = (1 - \alpha)(1 - e^{-\alpha\phi})/\alpha\phi$.

The values of η for various ϕ and α are plotted in Fig. 5. Here also η varies from fibre to fibre since α, the stiffness coefficient, is a function of position.

Once the deformations of the fibres at P_1 and P_2 are determined, the strains and stresses in the concrete at other fibres as well as the rotation of the section can be found by employing the accepted assumption of plane sections remaining plane.

2.3. TRANSFER OF FORCES TO FIBRES P_1 AND P_2

(a) Prestressing Force: At time t = 0, the prestressing bed force F^o can be transferred to points P_1 and P_2 as F_1^o and F_2^o respectively, Fig. 2; such forces will act concentrically on the equivalent areas at these points. The concrete stress at P_1 will be $\sigma_{c1(0)} = F_1^o/A_{e1} = F_1^o/(A_{c1} + n_0 A_{s1})$.

At any given time t the concrete stress will be

$\sigma_{c1(t)} = \sigma_{c1(0)} e^{-\alpha_1\phi}$. The stress loss at time t is

$\Delta\sigma_{c1} = \sigma_{c1(0)} - \sigma_{c1(t)} = \sigma_{c1(0)}(1 - e^{-\alpha_1\phi})$. The loss in the Force F_1^o will be

$$\Delta F_1 = A_{c1}(\Delta\sigma_{c1}) = A_{c1}\,\sigma_{c1(0)}(1 - e^{-\alpha_1\phi}) = A_{c1}F_1^o\,(1 - e^{-\alpha_1\phi})/(A_{c1} + n_0 A_{s1}).$$

The net remaining force will be

$$F_{1(t)} = F_1^o - \Delta F_1 = F_1^o\,[1 - (1 - e^{-\alpha_1\phi})/(1 + n_0 u_1)] = F_1^o(n_0 u_1 + e^{-\alpha_1\phi})/(1+n_0 u_1).$$

Similarly, for point P_2,

$$F_{2(t)} = F_2^o(n_0 u_2 + e^{-\alpha_2\phi})/(1 + n_0 u_2).$$

In practice, many structures are post-tensioned and grouted immediately after tensioning to establish bond between concrete and steel tendons. Let the initial prestressing force in the tendon be F (jack force) with components F_1 and F_2 at points P_1 and P_2 respectively. For such cases, it is more advantageous to consider the part of the force F_1 (or F_2) carried by the concrete alone at P_1(or P_2). Considering point P_1 at time t = 0: $\sigma_{c1(0)} = F_1/(A_{c1} + n_0 A_{s01})$.

Now $F_1 = F_{c1} + F_{s1} = A_{c1}\,\sigma_{c1(0)} + n_0\,\sigma_{c1(0)}\,A_{s01}$. It can be readily shown that

$F_{c1} = F_1/(1 + n_0 u_{s1})$ where $u_{s1} = A_{s01}/A_{c1}$. After time t, the reduction in

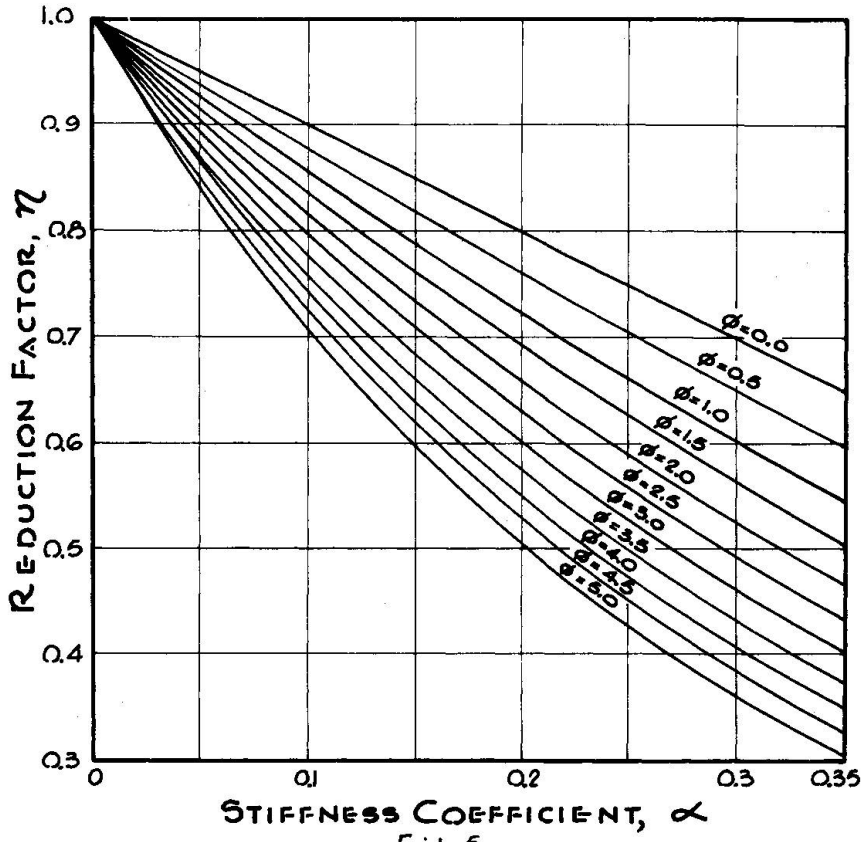
REDUCTION FACTOR, η
STIFFNESS COEFFICIENT, α
1.0
0.9
0.8
0.7
0.6
0.5
0.4
0.3
0
0.1
0.2
0.3
0.35
Ø=0.0
Ø=0.5
Ø=1.0
Ø=1.5
Ø=2.0
Ø=2.5
Ø=3.0
Ø=3.5
Ø=4.0
Ø=4.5
Ø=5.0

Fig. 5

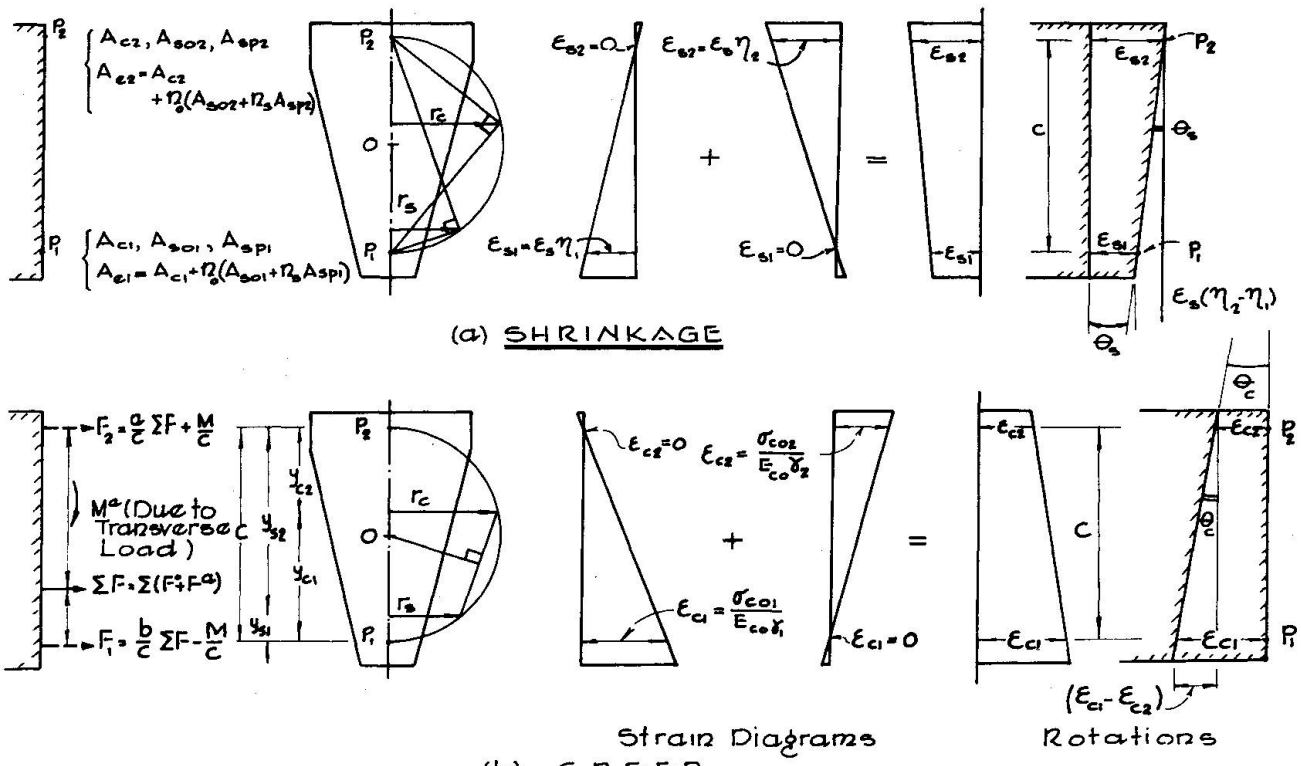
(a) SHRINKAGE
Strain Diagrams
Rotations
(b) CREEP

Fig. 6

the force carried by the concrete will be $\Delta F_{c1} = A_{c1}\,\sigma_{c1(0)}(1 - e^{-\alpha_1\phi})$. Thus

$F_{c1(t)} = F_{c1} - \Delta F_{c1} = F_1\, e^{-\alpha_1\phi}/(1 + n_0\, u_{s1})$. Similarly, for point P_2,

$F_{c2(t)} = F_2\, e^{-\alpha_2\phi}/(1 + n_0\, u_{s2})$ where $u_{s2} = A_{s02}/A_{c2}$.

(b) Externally Applied Longitudinal Force: In this case, the force, being invarient with time, can be readily transferred to points P_1 and P_2 by means of the lever arm principle. See Figs. 2 and 6.

(c) Externally Applied Transverse Forces: Such forces will produce a moment on any one section; this moment can be replaced by a couple formed from two equal and opposite forces applied at P_1 and P_2 (See Figs. 2 and 6). Such forces are also invarient with time.

2.4. MOMENTS ON A SECTION AT TIME t

(a) Due to Prestressing:

Pre-tensioned Case - Here the moment on the whole section, based on the bed force F^o, is given by:

$$M_{(t)} = F_{1(t)}(y_{c1} - y_{e(t)}) - F_{2(t)}(y_{c2} + y_{e(t)})$$

$$= F^o\{(\frac{n_0u_1 + e^{-\alpha_1\phi}}{1 + n_0u_1})(y_{c1} - y_{e(t)})b - (\frac{n_0u_2 + e^{-\alpha_2\phi}}{1 + n_0u_2})(y_{c2} + y_{e(t)})a\}/c$$

where $y_{e(t)}$ is the distance of the effective centroid of the whole section from the c.g.c. at time t, and will be deduced later on.

Post-tensioned Case - The moment on the concrete part alone, given in terms of the initial jack force F, will be:

$$M_{c(t)} = F_{c1(t)}\, y_{c1} - F_{c2(t)} y_{c2} = F\ (\frac{e^{-\alpha_1\phi}\, y_{c1}}{1 + n_0\, u_{s1}} b - \frac{e^{-\alpha_2\phi}\, y_{c2}}{1 + n_0\, u_{s2}} a)/c$$

(b) Due to Externally Applied Longitudinal Force: For a force F^a, applied below the c.g.c., the moment $M_t^a = F^a\,[y_{c2} - a - y_{e(t)}]$, and for the force F^a applied above the c.g.c., the moment is $M_t^a = F^a\,[y_{c1} - b + y_{e(t)}]$ where a = distance from the applied load to P_1 (a is -ve in Fig. 2), and b = distance from the applied load to P_2.

(c) Due to Externally Applied Transverse Forces: The moment produced by such forces on any section will remain constant for any time.

2.5 SECTION PROPERTIES AT TIME t

Since concrete creeps under sustained load resulting in a reduced modulus

of elasticity, the position of the effective centroid of the whole section changes with time. Considering the axial stiffness of the concrete one can intuitively relate the stiffness components at P_1 and P_2 to the overall stiffness of the concrete at the c.g.c. Thus, $E_{cf} A_c = A_{c1} E_{cf1} + A_{c2} E_{cf2}$.

Or, $E_{cf}A_c = (\frac{y_{c2}}{c} A_c)\beta_1 E_{c0} + (\frac{y_{c1}}{c} A_c)\beta_2 E_{c0}$.

Hence $E_{cf} = E_{c0}(y_{c2}\beta_1 + y_{c1}\beta_2)/c = \beta_0 E_{c0}$ where $\beta_0 = (y_{c2}\beta_1 + y_{c1}\beta_2)/c$

(a) Effective Centroid - Taking the c.g.c. as a datum, the distance of the effective centroid of the whole section at time t = 0 from the c.g.c. will be (see Fig. 2): $y_{e(0)} = n_0 A_s y_0/(A_c + n_0 A_s)$. After time t due to creep in concrete the effective centroid will shift toward the c.g.s. By taking moments about the c.g.c. the distance of the effective centroid from the c.g.c. at time t becomes $y_{e(t)} = E_s A_s y_0/(E_{cf} A_c + E_s A_s) = n_0 A_s y_0/(\beta_0 A_c + n_0 A_s)$. Thus the shift in the effective centroid at time t will be $e = y_{e(t)} - y_{e(0)}$.

(b) Effective Moment of Inertia - the effective moment of inertia of the whole section at time t = 0, I_0, based on the short-term-loading modulus of elasticity of concrete E_{c0}, is given by:

$$I_0 = I_c + A_c y_{e(0)}^2 + n_0 \{I_s + A_s [y_0 - y_{e(0)}]^2\}.$$

Similarly, the effective moment of inertia at any time t, based on the fictitious modulus of elasticity of the creeped concrete, E_{cf}, can be shown to be:

$$I_t = I_c + A_c y_{e(t)}^2 + n_0\{I_s + A_s [y_0 - y_{e(t)}]^2\}/\beta_0.$$

2.6. ROTATION AND DEFLECTION

Figure 6 shows the strains and rotations of the section taking into account shrinkage and creep of concrete. From Fig. 6 (a), the rotation due to shrinkage of a small element of length Δx is:

$$\theta_s = (\varepsilon_{s2} - \varepsilon_{s1})\Delta x/c = (\varepsilon_s \eta_2 - \varepsilon_s \eta_1)\Delta x/c$$

Or, $\theta_s = \varepsilon_s(\eta_2 - \eta_1)\Delta x/c$.

The curvature of a creeped section under sustained load is [See Fig. 6(b)]: $\theta_c/\Delta x = (\varepsilon_{c1} - \varepsilon_{c2})/c = (\frac{\sigma_{c01}}{\gamma_1} - \frac{\sigma_{c02}}{\gamma_2})/(E_{c0}\, c)$. Thus the total rotation Θ and deflection y of any section of a structure subjected to creep and shrinkage can be found by numerical integration of the well known equations -

$$\Theta = \int\theta\, dx, \text{ and } y = \int\int\theta\, dx\, dx$$

Values of γ and η are given for various α and ϕ in Figs. 4 and 5 respectively. It is worthwhile to note that the above deduced expressions for rotation and hence deflection depend solely on the initial values of stresses and the

short-term-loading modulus of elasticity, E_{c0}, as well as on the assumed shrinkage strain in an unreinforced concrete section.

2.7. MODULUS OF DEFORMATION OF SECTION

By relating curvature to the moment on a section at any time t, one can deduce an expression for the modulus of deformation, E_e, based on the initial design parameters at time t = 0. Mathematically

$$\left(\frac{1}{\rho}\right)_t = \left(\frac{d^2y}{dx^2}\right)_t = M_t/I_tE_{cf} = M_0/I_0E_e$$

where $E_e = (I_t/I_0)(M_0/M_t)E_{cf}$

The ratios (I_t/I_0) and (M_0/M_t) are obtained by substituting the appropriate design parameters for time t = 0 and t = t in the expressions derived earlier except for the post-tensioned case. It should be noted that for this case the expression for E_e reduces to $E_e = [M_{c(0)}/M_{c(t)}]E_{cf}$ with the substitution of the appropriate parameters at time t = 0 and t = t.

3. CONCLUDING REMARKS

The influence of shrinkage and creep on rotation and deflection of prestressed uncracked simply supported structures can be readily estimated from the pertinent design parameters at time t = 0. The expressions derived are applicable within the elastic range of the materials considered.

The analytical results, with the aid of a computer, may be extended to treat realistically stability problems, taking into account, of course, the problem of orthotropy.

REFERENCES

1. Dischinger, F.: "Elastische und plastische Verformung der Eisenbetontragwerke". Bauingenieur 20 (1939) H. 5/6, S 53-63; H. 21/22, S. 286-294.
2. Fritz, B.: "Verbundträger, Berechnungsverfahnen für die Brückenbaupraxis". Springer-Verlag, Berlin, 1961.
3. Busemann, R.: "Kriechberechnung von Verbundträgen unter Benutzung von zwei Kriechfasern". Bauingenieur 25 (1950) H. 11, S. 418-420.
4. Habel, A.: "Berechnung von Querschnitten mit mehrlagiger Spannbewehrung nach dem Verfahren von Busemann". Beton-und Stahlbetonbau 49 (1954) H.2, S. 25-31.
5. Leonhardt, F.: "Prestressed Concrete-Design and Construction". Wilhelm Ernst & Sohn, Berlin, 1964.

SUMMARY

The two-fibre method of Busemann and Habel together with Fritz fictitious modulus of elasticity are utilized to yield rotation and deflection of simply supported prestressed concrete structures accounting for creep and shrinkage in concrete. Furthermore, expressions for a modulus of deformation for various loading cases are derived. These derivations are in terms of pertinent design parameters at time t = 0.

RESUME

La méthode des deux fibres de Busemann et Habel, en conjonction avec le module fictif d'élasticité de Fritz est utilisée pour déterminer la rotation et la flèche des ouvrages à armature simple, en béton précontraint, rendant compte des forces de fluage et de retrait. De plus, des expressions pour un module de déformation sont dérivées pour différents états de charge. Ces dérivations se réfèrent à des termes des paramètres du projet respectif, au temps t = 0.

ZUSAMMENFASSUNG

Das Zwei-Fasern-Verfahren von Busemann und Habel zusammen mit dem von Fritz entwickelten fiktiven Elastizitätsmodul des Betons ist zur Bestimmung des Drehwinkels und der Durchbiegung der frei aufliegenden Spannbetontragwerke unter Berücksichtigung des Kriechens und Schwindens des Betons verwendet worden. Ferner sind Ausdrücke für den Verformungsmodul für verschiedene Belastungsfälle abgeleitet worden. Diese Ableitungen beziehen sich auf die betreffenden Anfangswerte des Schnittes, d.h. zur Zeit t = 0.

Leere Seite
Blank page
Page vide