Zeitschrift: IABSE surveys = Revue AIPC = IVBH Berichte

Band: 10 (1986)

Heft: S-34: The role of fracture mechanics in rational rules for concrete design

Artikel: The role of fracture mechanics in rational rules for concrete design

Autor: Reinhardt, Hans W.

DOI: https://doi.org/10.5169/seals-50061

Nutzungsbedingungen

Die ETH-Bibliothek ist die Anbieterin der digitalisierten Zeitschriften auf E-Periodica. Sie besitzt keine Urheberrechte an den Zeitschriften und ist nicht verantwortlich für deren Inhalte. Die Rechte liegen in der Regel bei den Herausgebern beziehungsweise den externen Rechteinhabern. Das Veröffentlichen von Bildern in Print- und Online-Publikationen sowie auf Social Media-Kanälen oder Webseiten ist nur mit vorheriger Genehmigung der Rechteinhaber erlaubt. Mehr erfahren

Conditions d'utilisation

L'ETH Library est le fournisseur des revues numérisées. Elle ne détient aucun droit d'auteur sur les revues et n'est pas responsable de leur contenu. En règle générale, les droits sont détenus par les éditeurs ou les détenteurs de droits externes. La reproduction d'images dans des publications imprimées ou en ligne ainsi que sur des canaux de médias sociaux ou des sites web n'est autorisée qu'avec l'accord préalable des détenteurs des droits. En savoir plus

Terms of use

The ETH Library is the provider of the digitised journals. It does not own any copyrights to the journals and is not responsible for their content. The rights usually lie with the publishers or the external rights holders. Publishing images in print and online publications, as well as on social media channels or websites, is only permitted with the prior consent of the rights holders. Find out more

Download PDF: 27.11.2025

ETH-Bibliothek Zürich, E-Periodica, https://www.e-periodica.ch

The Role of Fracture Mechanics in Rational Rules for Concrete Design

Le rôle de la mécanique de la rupture dans le projet de structures en béton

Die Rolle der Bruchmechanik im Massivbau

Hans W. REINHARDT
Prof. of Struct. Eng.
Delft Univ. of Technology
Delft, the Netherlands

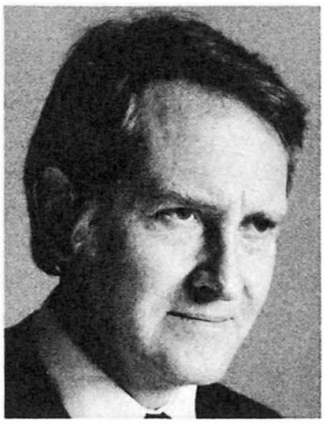

Hans W. Reinhardt graduated from Stuttgart University, Fed. Rep. of Germany. As Head of the Concrete Group of the Stevin Laboratory he is in charge of experimental research on concrete and concrete structures at the Delft University of Technology.

SUMMARY

Typical features in concrete design are amongst others the apparent flexural strength and the size dependence displayed by the strength of pipes and by the bending shear capacity and punching shear capacity of beams and slabs. A sound explanation is found in the fundamentals of fracture mechanics for concrete. It is shown that concrete behaves like an elastic material prone to softening, which makes the application of nonlinear fracture mechanics appropriate. Limits of application are stated and further activities are encouraged with the view to making design rules more rational and to ensuring public safety.

RÉSUMÉ

Lors du projet de constructions en béton, certains indices spéciaux apparaissent, tels que la résistance à la traction par flexion, qui est plus élevée que la résistance à la traction pure, l'influence des dimensions absolues sur la résistance aux efforts tranchants et au poinçonnement de poutres et de dalles, ou encore la résistance de tuyaux non armés. La mécanique de la rupture est en mesure d'expliquer ce comportement du béton. Le béton se comporte comme un matériau élastique se désagrégeant, et ceci permet l'application de la mécanique de la rupture non-linéaire. Les limites d'application sont précisées. De nouveaux travaux de recherche sont proposés, afin de justifier par la théorie des règles de conception et de calcul et ainsi d'améliorer la sécurité des constructions.

ZUSAMMENFASSUNG

Bei der Berechnung von Betonkonstruktionen stösst man auf einige Besonderheiten, wie z.B. die Biegezugfestigkeit, die höher ist als die zentrische Zugfestigkeit, den Einfluss der absoluten Abmessungen auf die Schub- und Durchstanzfestigkeit von Balken und Platten oder die Tragfähigkeit von unbewehrten Betonrohren. Eine schlüssige Erklärung kann die Bruchmechanik liefern. Es wird gezeigt, dass sich Beton wie ein elastisches Material mit Entfestigung verhält, wodurch die Anwendung der nicht-linearen Bruchmechanik gerechtfertigt erscheint. Die Grenzen der Anwendbarkeit werden aufgezeigt. Weitere Forschungsarbeiten werden angeregt, um die Entwurfs- und Berechnungsvorschriften durch Theorie besser zu stützen und die Sicherheit der Bauwerke zu gewährleisten.

1. INTRODUCTION

Fracture mechanics is a child of this century. It started in the second decade of this century on a theoretical basis and was used to explain results of fracture experiments on brittle materials. It remained a scientific tool until catastrophic accidents occurred to ships and storage tanks in the forties, which could not be explained by the usual strength approach. The failures were due to unstable crack propagation in an obviously brittle material. On the other hand, the material was structural steel which complied with the requirements of the standards. Another explanation, namely, that failure could have been caused by fatigue, had to be rejected. The continuing dilemma between theory and the unexplained phenomena encountered in actual practice affected the confidence in safety analysis.

It was then that the theory of fracture mechanics acquired major significance, as it was able to explain brittle failure and to show the governing parameters. Nowadays fracture mechanics is an accepted tool in the safety assessment of aircraft, ships, pressure vessels , pipelines and welded offshore steel structures.

Contrary to metal, concrete made the acquaintance of fracture mechanics only in the sixties and even today there is considerable discussion about the usefulness of this approach. This was to be expected, since concrete is well suited to resist compressive forces, whereas the steel reinforcement resists the tensile forces. Fracture mechanics, however, deals mostly with tensile loading. So the loading cases of reinforced and/or prestressed concrete structures where tensile failure occures are of interest, such as bending and punching shear failure. Also, shrinkage and thermal stresses can be covered. Of course, tensile failure of plain concrete is likewise included.

When concrete is considered on a "micro" scale, there are tensile stresses and cracks everywhere due to the heterogeneity of the material. However, this is not the field of a practising engineer, but rather that of the materials scientist. On this level, there is a rapid increase in basic understanding of failure mechanisms. An intermediate field is the analysis of concrete structures by means of finite element analysis in which fracture mechanics and strength of materials approaches are combined.

This paper will describe some general fundamental aspects of fracture mechanics, the specific aspects of concrete and finally the application to concrete structures. If the reader does not want to spend much time on theory, he is advised to skip Section 2 and to concentrate on the applications in Section 3.

2. MODELLING OF CONCRETE AND FRACTURE MECHANICS

2.1 Model based on strength

Design codes treat concrete as an isotropic, homogeneous material which behaves in a linear elastic manner until the maximum stress. Under maximum compressive stress the material begins to yield. When a certain allowable strain is reached, the material fails in crushing. Under tensile stresses concrete is modelled also as behaving in the linear elastic mode until maximum tensile stress is reached; thereafter it cracks immediately with no further strain. Fig. 1 shows a graph from the CEB-FIP Model Code [1]. The compressive strength is f_c, the tensile strength f_t. The modulus of elasticity E_c is the same in compression and tension, ε_u is the maximum allowable strain. This means that concrete is described as an elastic brittle material in tension and as an elastic plastic (to some extent) material in compression. Thus the failure load is calculated as the strength determined from uniaxial loading experiments multiplied by the appropriate cross-section.

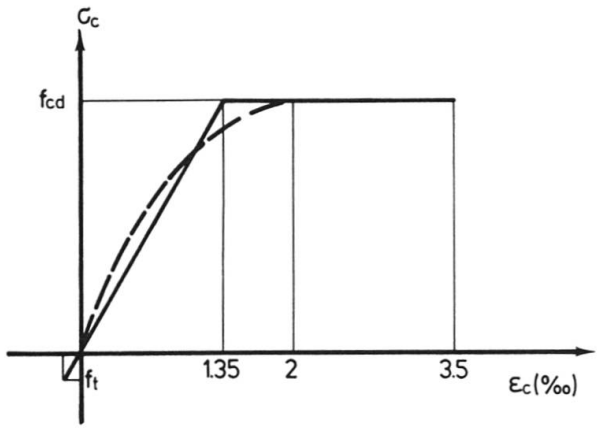

Fig. 1 Stress strain diagram of concrete

2.2 Linear elastic fracture mechanics

It is well known that cracks occur in concrete long before the ultimate load is reached. But in the usual strength of materials approach this fact is not considered. On the contrary, fracture mechanics starts always from the presence of a crack. Since a crack is a discontinuity in the material, stress and strain will deviate from a smooth pattern. Criteria other than an average stress compared to strength have to be found in order to judge these local effects. Two methods are mostly used: the energy balance and the stress intensity factor.

Using the first, Griffith [2] considered a crack of length 2a in a plate under tensile stress σ_o (Fig. 2). The total energy U of the cracked plate may be written as

$$U = U_o + U_a + U_\gamma - W \tag{1}$$

where U_o is the elastic energy of the loaded uncracked plate (which is constant), U_a is the change in elastic energy due to the crack, U_γ is the suface energy caused by the formation of new crack surfaces and W is the work done by external forces. For the case of fixed grip condition W is zero. Equilibrium is possible as long as the total energy increases during crack extension. Unstable crack extension starts when U decreases. The point of instability is given by $dU/da = 0$. With $U_a = \pi\sigma_o^2 a^2/E$ [3] and $U_\gamma = 2(2a\gamma)$ this condition can be written as

$$\frac{d}{da}\left(U_o + \frac{\pi\sigma_o^2 a^2}{E} + 4a\gamma - W\right) = 0 \tag{2}$$

E is Young's modulus and γ the specific surface energy. Since U_o is constant and W = 0, the condition becomes

$$\sigma_o \sqrt{a} = \sqrt{\frac{2E\gamma}{\pi}} \tag{3}$$

The left-hand side is the product between remote stress σ_o and square root of crack half length, i.e. a mechanical and a geometrical term, whereas the right-hand side is a linear elastic material property. In order to use this relation for practical application, the surface energy γ has to be known and, according to the theory, an ideally sharp crack has to be present there. On the other hand, if only two similar loading conditions and geometries have to be compared for the same material, eq. (3) states that the stress σ_o is inversely proportional to the square root of the absolute magnitude of the crack length. The strengh approach would not have predicted an influence of size (crack length)

on σ_o.

Difficulties in knowing what values to adopt for γ and U_a in practical situations were overcome by Irwin [4], who showed that the stresses in the vicinity of a crack tip, Fig. 3, have the form

$$\sigma_{ij} = \frac{K}{\sqrt{2\pi r}} f_{ij}(\theta) + \ldots\ldots \tag{4}$$

where i, j refer to the cartesian coordinates and r, θ are the polar coordinates; fij is a trigonometric function; K determines the magnitude of the elastic stresses and is called the stress intensity factor. It is given by

$$K = \sigma_o \sqrt{\pi a} \cdot g \text{ (geometry)} \tag{5}$$

where g is a function which depends on the geometry of the specimen or structure and on the crack configuration. The local stress increases with increasing stress σ_o until a critical value σ_c is reached which leads to

$$K_c = \sigma_c \sqrt{\pi a} \cdot g \text{ (geometry)} \tag{6}$$

K_c is called the critical stress intensity factor and is a material property. When K_c and g (geom) are known, a fracture criterion is established for a certain crack size a.

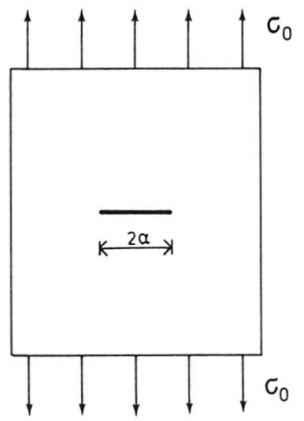

Fig. 2 Griffith crack

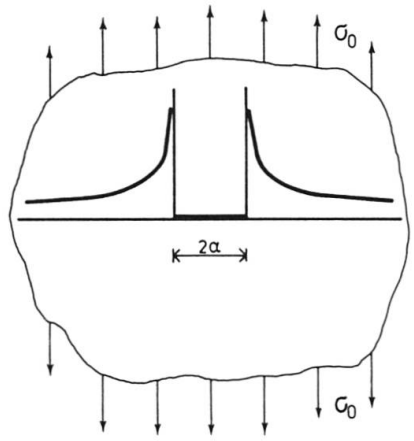

Fig. 3 Stresses near crack tips

On comparing eq. (3) with eq. (6) there is found to be a close relationship. For the centrally cracked plate g (geom) is unity and therefore

$$K_c = \sqrt{2E\gamma} \tag{7}$$

The term dU_a/da in eq. (2) is called the energy release rate G; in the critical state this rate G_c is equal to 2γ, which is called the crack resistance R. This leads finally to

$$K_c = \sqrt{EG_c} \tag{8}$$

Eq. (8) is a relation between a stress intensity factor and a material property. In practice K_c is determined on standard specimens with cracks. On the other hand, a wide range of stress intensity factors is available for all types of geometries and loading conditions, such as normal forces, bending moments, impact loading, thermal loading. The design engineer only has to take the appropriate K and to compare it with the material K_c, which will give him the allowable stress for a given crack length or an allowable crack length for a given loading stress, Fig. 4.

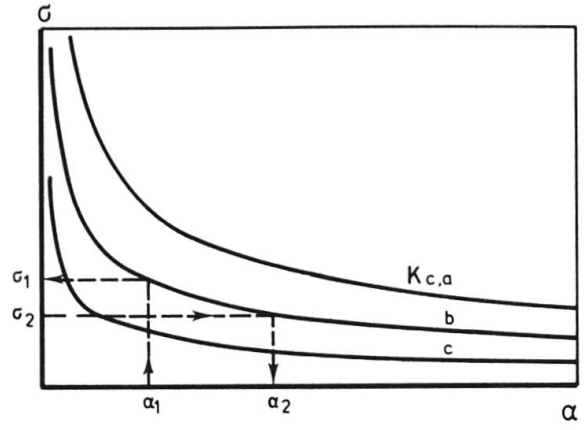

Fig. 4 Stress vs. crack length for various K_c

2.3 Nonlinear fracture mechanics

Linear elastic fracture mechanics seems very simple, and application is straightforward. The question is, however, whether the material behaves as assumed, namely, in a linear elastic manner. For this reason a uniaxial tensile test on a concrete specimen will be considered, Fig. 5. When the loading starts from zero, a linear relation between stress and total elongation δ is obtained up to

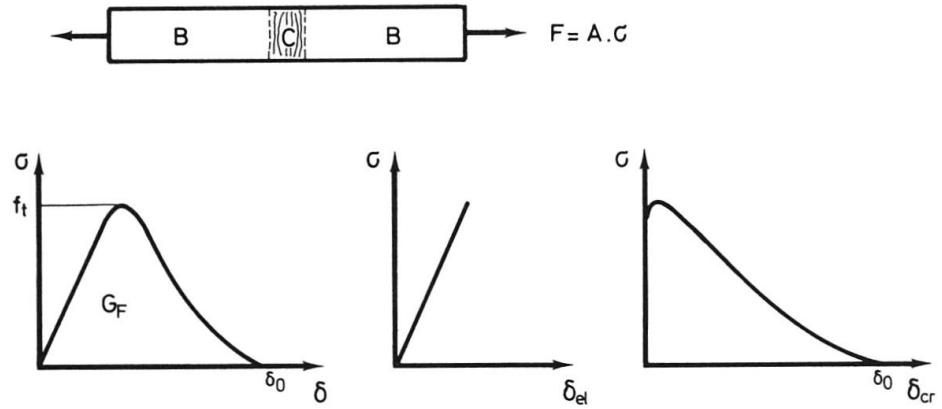

Fig. 5 Tensile specimen and stress extension curves

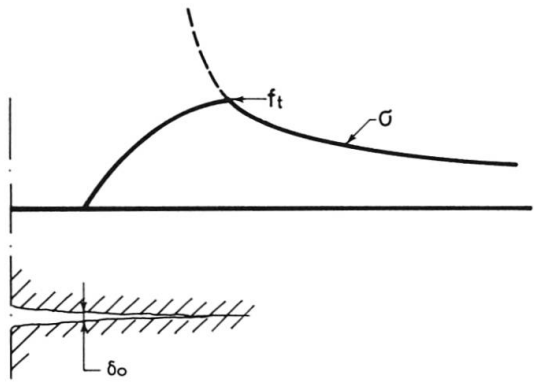

Fig. 6 Stress distribution in a fictitious crack

about 60% of the maximum stress. Then the σ-δ-line curve reaches the maximum and drops to zero. The total elongation can be split up into two parts: an elastic part δ_{el}, which is the recoverable elastic elongation of the whole specimen, and a crack opening displacement δ_{cr}, which is attributed to a small region C (the irrecoverable elongation of region B is neglected for the sake of simplicity). The behaviour of concrete can be characterised by a modulus of elasticity for the ascending branch and a softening during crack extension. In any case this behaviour is not a linear elastic one and not a plastic one either.

When the softening behaviour is applied to a real crack, no higher stresses can occur than the tensile strength f_t. Beyond that point the stress decreases with increasing crack opening. When the crack opening has become δ_o, the stress vanishes. Hillerborg [5] calls this zone a fictitious crack, Fig. 6. In the fictitious crack the fracture energy is called G_F, which represents the area under the σ-δ-curve in Fig. 5. One can easily imagine that the influence of a fictitious crack on the overall behaviour of a structural element is large when the element is small and that the influence diminishes when the element is large. Hillerborg defines a characteristic length

$$l_{ch} = EG_F/f_t^2 \tag{9}$$

In case of pure bending he has shown that $\sqrt{EG_F}$ approaches K_c if the depth of the (unreinforced) beam is about 20 times l_{ch}, or, in other words, for these dimensions linear elastic fracture mechanics is appropriate. To give some idea of real dimensions, l_{ch} is of the order of 0.25 to 0.40 m. This example already shows that the usual civil structures are too small for linear elastic fracture mechanics.

The assumption of a discrete crack in concrete is a schematization which is only partly supported by visual observation. What mostly happens in front of a visible crack is that microcracks develop around the aggregate particles and within the hardened cement paste. With further loading, some microcracks coalesce and finally form a visible crack while others are unloaded and disappear. A whole region around the visible crack has been stretched and has consumed energy. This observation led Bazant [6] to the assumption of a blunt crack and the model of the crack band. With the aid of this model he derived analytical expressions for the size effect on the bearing capacity of structures. It starts from two statements: the total potential energy release U_a caused by fracture is a function of both

- the length, a, of the fracture zone;
- the width of the cracked zone, $nd_a a$.

U_a can be a general function of a and $nd_a a$, where d_a is the size of the maximum aggregate particle used and n is a constant. Fig. 7 shows two examples of loading where the crack band is marked by the area 1234. The energy which is released within this area during fracture gives the term of second statement. The areas 136 and 245 are the uncracked zones which release energy into the fracture front of the crack with length a. In order to generalise the theory, energy is expressed in terms of nondimensional functions. This can be done with

$$\alpha_1 = a/d \quad \text{and} \quad \alpha_2 = nd_a a/d^2 \tag{10}$$

where d is the main dimension of the element. The energy can be expressed in the general form as

$$U_a = \frac{1}{2E_c} \left(\frac{F}{bd}\right)^2 bd^2 f(\alpha_1, \alpha_2, \xi_i) \tag{11}$$

The function f depends on the actual geometrical shape and boundary conditions of the structural element, but not on the size d. E_c is the modulus of elasticity of concrete, ξ_i are geometrical parameters, and b is the width. Instability occurs when

$$\frac{\partial U_a}{\partial a} = G_F b \tag{12}$$

which is formally the same as eq. (2) with the difference that G_F represents the total fracture energy instead of the elastic part only. Since ξ_i is constant for similar structures, eqs. (12) and (11) yield

$$\left(\frac{f_1}{d} + \frac{f_2 \cdot nd_a}{d^2} \right) \frac{F^2}{2bE_c} = G_F b \tag{13}$$

where f_1 and f_2 are partial derivatives of f with respect to α_1 and α_2, respectively.

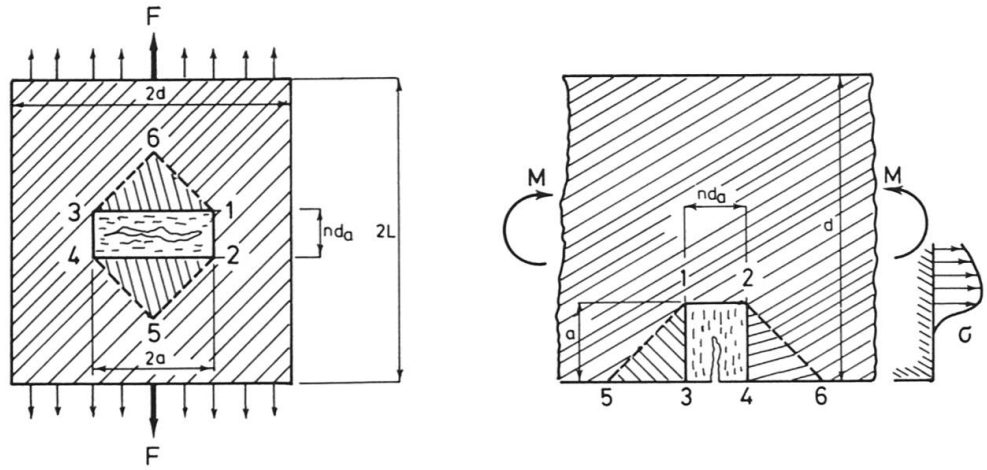

Fig. 7 Crack band; two examples

With the idealised stress-strain relation of Fig. 8 and the crack band width nd_a in which energy is consumed in a uniaxial tensile experiment G_F becomes

$$G_F = nd_a \left(1 - \frac{E_c}{E_t}\right) \frac{f_t^2}{2E_c} \tag{14}$$

(E_t has a negative sign). With the ultimate force $F_U = \sigma_u bd$ and $d = \lambda d_a$ a relation for the maximum stress (strength) σ_u as a function of the scale factor λ is obtained:

$$\sigma_u = B(1 + \lambda/\lambda_o)^{-\frac{1}{2}} \cdot f_t \tag{15}$$

where $B = (1 - E_c/E_t)^{\frac{1}{2}}/f_2$ and $\lambda_o = nf_2/f_1$. The exact solution of f_1 and f_2 is difficult. However, it is easy to compare the ultimate stress of two similar structures of different size:

$$\sigma_u/f_t \sim (1 + \lambda/\lambda_o)^{-\frac{1}{2}} \tag{16}$$

Eq. (16) comprises the linear fracture mechanics and the strength approach as limiting cases. In linear fracture mechanics the whole energy is consumed in the crack propagation, which means $f_2 = 0$. Eq. (13) leads then to $\sigma_u \sim (d)^{-\frac{1}{2}}$. Contrary to that means strength that the crack band consumes all the energy and therefore $f_1 = 0$. From eq. (13) follows $\sigma_u \sim f_t$. This can be illustrated by eq. (16) in terms of absolute size: if the structure is very large with respect to maximum aggregate size, $d_a\lambda$ becomes large compared to λ_o and 1 may be neglected; if the size is small, the 1 in eq. (16) predominates and λ/λ_o may be neglected.

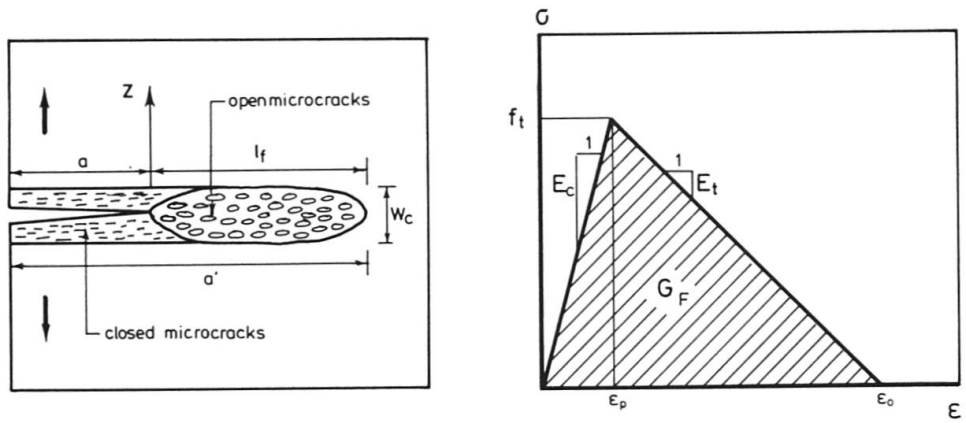

Fig. 8 Crack band and concrete schematization

The result of this theoretical digression is given in Fig. 9, where the nominal stress at failure σ_u is plotted versus the logarithm of the size. Strength as the yield criterion is the upper bound for small sizes, whereas linear fracture mechanics is the lower bound for large sizes. The transition follows nonlinear fracture mechanics of the crack band model. A quantitative example will be given in Chapter 3.2.

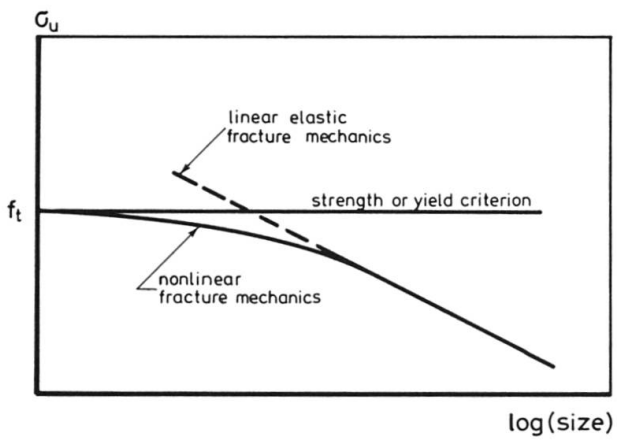

Fig. 9 Size effect according to various theories.

3. APPLICATION OF FRACTURE MECHANICS TO CONCRETE STRUCTURES

3.1 Plain concrete

A few cases will be examined where unreinforced members or elements have to be designed against tensile failure: a beam (or slab) under bending moments, a pipe under a concentrated load, a slab or beam with bending and shrinkage or thermal stresses.

It is well known that the flexural strength of concrete is larger than the uniaxial strength. In an imprecise way this difference has been attributed to the strain gradient. However, if concrete were en elastic brittle material there would not be a positive influence on loading capacity, because the beam would fail as soon as the extreme fibre reached the uniaxial tensile strength.

A positive effect is possible only if the material behaves in a ductile manner and starts to yield or if there is strain softening and no immediate reversion to zero stress. Gustafsson and Hillerborg [10] used their fictitious crack model to study the flexural strength of a beam with rectangular cross-section, for which they used two schematizations of the actual concrete tensile behaviour which are shown in Fig. 10. The stress-crack opening line consists of a linear elastic loading branch and a linear softening branch (SL) or a bi-linear softening branch (C).

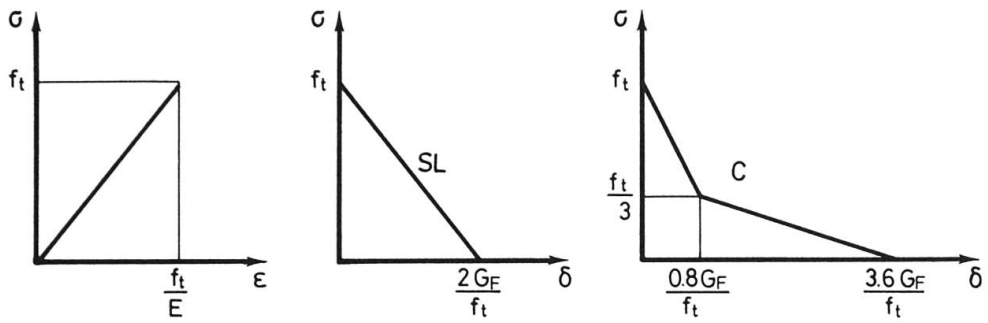

Fig. 10 Two examples of concrete modelling

It is essential that the area under the lines is equal to G_F of an actual test. The other quantities are the tensile strength f_t, Young's modulus E and the characteristic length $l_{ch} = EG_F/f_t^2$. The result of a finite element analysis is given in Fig. 11, where f_f denotes the apparent strength of the beam. There are two extreme cases: the plastic hinge with $f_f / f_t = 3$ and elastic brittle behaviour with $f_f/f_t = 1$. Real concrete with softening shows a high flexural strength at small dimensions and approaches the tensile strength with large dimensions. Ordinary concrete with $l_{ch} = 0.3$ m would then have a flexural strength in testing equal to about 1.5 times the uniaxial strength, which agrees with general experience.

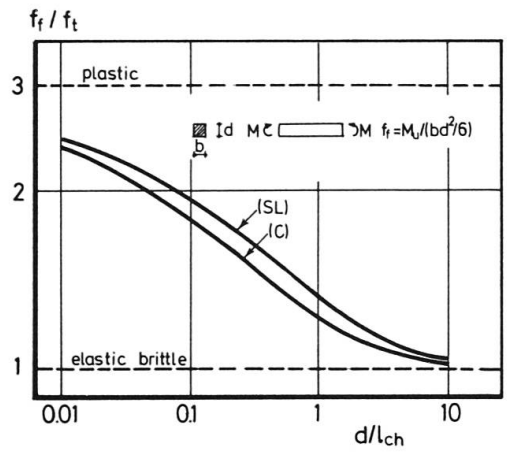

Fig. 11 Flexural strength of concrete as function of the size

A beam which is subject to initial eigenstresses and is loaded in bending will show a smaller flexural strength. The eigenstresses may be due to differential shrinkage or cooling. In the following example it is assumed that the largest eigenstress is equal to the uniaxial tensile strength. In Fig. 12 the ordinate is again the apparent strength, and the abscissa the size. It can be seen that the influence of the eigenstresses is slight for small beams, whereas

it is considerable for large dimensions. In both examples (with and without eigenstresses), the crack sooner reaches the stress-free width according as the beam is larger, which means that the apparent failure stress is smaller.

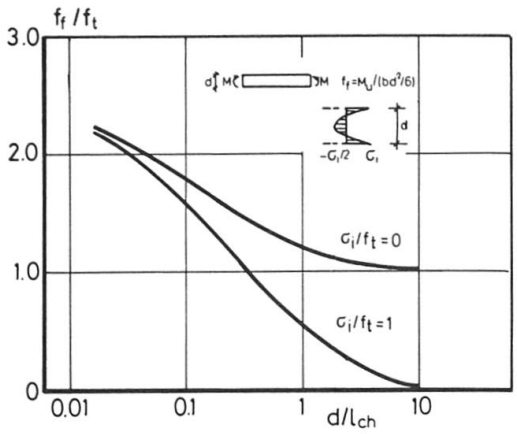

Fig. 12 Flexural strength with simultaneous shrinkage stresses

Another example relates to a slab or beam with a crack in the tensile bending zone. Such a crack can be caused by shrinkage or thermal stresses the depth of which can be calculated by fracture mechanics also [11,24]. It is expected that the residual strength depends also on the absolute size. Fig. 13 gives the result in terms of apparent strength versus relative ligament size. It shows how the strength decreases with absolute size. It is interesting to note that linear fracture mechanics predicts too high a strength. On the other hand, the assumption of a constant flexural strength of 1.5 times the tensile strength would overestimate the load capacity of the cracked beam for most practical dimensions.

Gustafsson and Hillerborg [10] have also analysed unreinforced pipes. By means of the fictitious crack model they calculated the failure load F_u and inserted this load into the linear elastic formula, which is given in Fig. 14, to obtain an apparent crushing strength f_{cr}. It can be seen that f_{cr} is strongly dependent on the size of the pipe and to some extent also on the wall thickness.

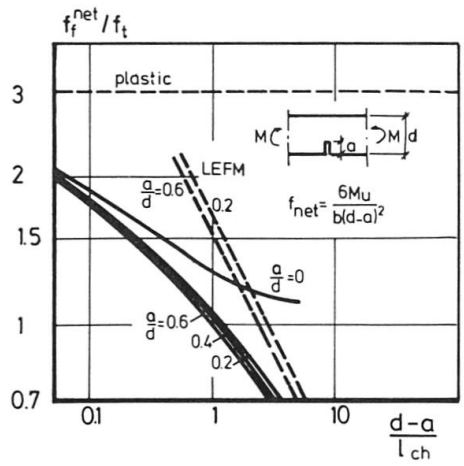

Fig. 13 Flexural strength of a cracked beam

Failure in a two-point bending configuration is less sensitive to size, as is apparent from Fig. 15. This means that a real pipe has different safety against crushing and bending, although elastic theory would have predicted the same safety for both. As stated by [10], Fig. 14 and 15 are used by the Swedish industry as design graphs, and they agree well with practical experience.

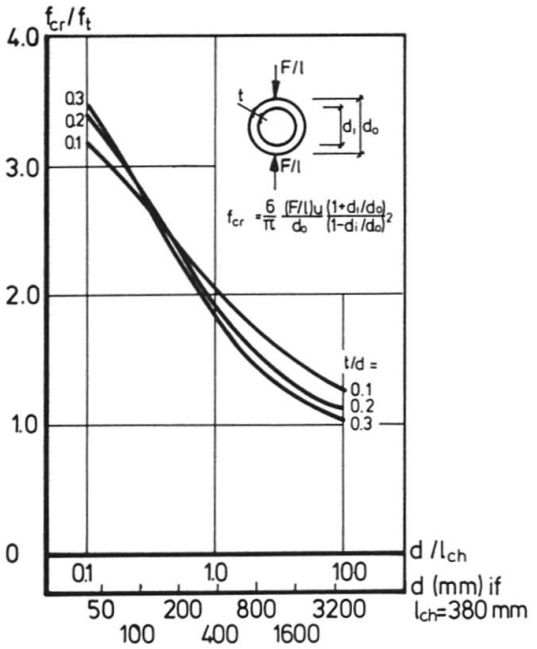

Fig. 14 Crushing strength of pipe as function of size

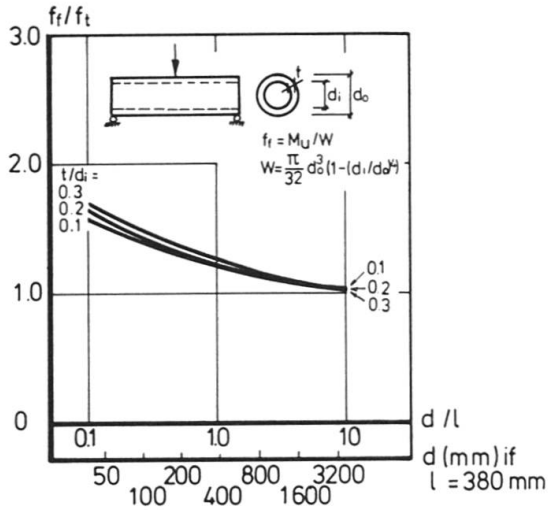

Fig. 15 Bending strength of pipe as function of size

The examples derive from finite element analysis. The fictitious crack model cannot provide analytical expressions which could be used in a design formula. This may be deplored, but on the other hand if normalized plots are available for frequent loading configurations and geometries, design will present no difficulties.

When the governing dimensions are large, of the order of 1o times the characteristic length, linear fracture mechanics can be applied. As has already been mentioned, there are numerous solutions available of the stress intensity factor [12] in an analytical form. The designer has to compare the critical stress intensity factor of his material with the appropriate stress intensity factor of the structural element which gives him an allowable stress or an acceptable crack length. The shear capacity of joints between precast concrete elements has been analysed in this way [18]. There are often two difficulties: first, critical stress intensity factors are usually not available and, second, the crack length is sometimes not detectable. Average values of K_C of concrete are of the order of 0.45 to 1.40 $MNm^{-3/2}$ which is a rough input for an approximate analysis [13]. Since dimensions are mostly smaller than allowed for linear fracture mechanics, research concentrates more on nonlinear fracture mechanics using G_F [5,6] or other analytical models [14,15].

3.2 Reinforced concrete

Brittle fracture of reinforced concrete should be avoided. As far as pure bending is concerned, reinforcement is so designed that yielding of steel determines the bearing capacity. In that case bending cracks occur in concrete, but the tensile force is resisted by the reinforcement. The cracks are arrested in the com-

pression zone of the element. The tensile strength of concrete is usually neglected since its contribution is indeed very small. Fracture mechanics does not seem to be the right method for the analysis of elements in pure bending [17]. One could try to apply fracture mechanics to the reinforcement (also prestressing steel), but it turns out that steel is very ductile and the dimensions of the bars or wires are small, which makes fracture mechanics inappropriate. In connection with stress corrosion, cracking fracture mechanics has been used for the assessment of safety [18] of corroded wires, but such applications are no part of the normal task of a practising engineer.

In the case of bending shear and punching shear the tensile strength largely determines the stability. Especially in the case of diagonal tension failure of beams which are not reinforced against shear, fracture mechanics is likely to be an appropriate tool. So it is not surprising that bending shear was the first loading case analysed by fracture mechanics. Hawkins et al. [19] used the Griffith energy concept and derived a thereotical relation between the ultimate shear stress, the shear span, the longitudinal reinforcement ratio, the strength of the concrete and the size of the beam. It emerged that the ultimate shear strength of simular beams was inversely proportional to the fourth root of depth times width, $(bh)^{-\frac{1}{4}}$. This would mean that the deeper the beam, the lower the ultimate shear stress, which has been confirmed by experiments. It would also mean that the width had the same influence as the depth, which has not been confirmed.

Linear fracture mechanics on the basis of a stress intensity factor has been used to examine the size effect on diagonal shear failure and punching shear failure [20]. A comparison with numerous test results showed the square root relation between load capacity and size, which overestimates the influence of the size on the capacity. Quite recent research on nonlinear fracture mechanics explained this discrepancy, and the result is already qualitatively shown in Fig. 9.

Bazant and Kim [21] analysed the beam under bending and shear. They split up the shear mechanism into composite beam action and arch action. The former considers concrete strength and longitudinal reinforcement ratio; the latter, reinforcement ratio and shear span. Both take account of the size of the beam. To model the influence of the absolute size, eq. (15) is used, which contains a few coefficients. These are determined from about 300 shear tests. The result of this study is the following design formula for the nominal shear strength in a rectangular cross-section

$$\tau = 8\sqrt[3]{\rho}\,(12\sqrt{f_c} + 3000\sqrt{\rho/\alpha^5})\,/\,\sqrt{\{1 + d/(25d_a)\}} \qquad (17)$$

where ρ is the longitudinal steel ratio, f_c the cylinder strength in N/mm^2, d the beam depth, d_a the maximum aggregate size of the concrete and $\alpha = a/d$, a being the shear span for the case of concentrated load and $\alpha = l/4d$ for that of uniform load, while l is the total span. Eq. (17) is the lower bound of all the experimental results with a correlation coefficient $\nu = 0.96$ for the mean value. The authors [21] have compared the formula with the valid ACI and CEB-FIP design formulas and have clearly shown that eq. (17) shows much less scatter ($\nu = 0.55$ for ACI and $\nu = 0.26$ for CEB-FIP). Taking account of the size effect on nominal shear strength is the essential contribution of fracture mechanics to eq. (17). It expresses a gradual transition from the strength criterion to an energy criterion for fracture. The latter predominates for beam depths $> 25\,d_a$. Extremely large beams approach the linear fracture mechanics prediction.

Diagonal tension cracking in torsion has been modelled by the energy criterion [22]. It has been found that the shear strength is inversely proportional to the square root of the beam depth. This result is suggestive of linear fracture mechanics. Although experiments agreed well with this relation, it should per-

haps be supported by nonlinear fracture mechanics before a general application can be suggested.

The author is not aware of other direct and analytical applications of fracture mechanics to reinforced concrete structures. As has been shown, these problems are amenable to analysis by fracture mechanics where tensile failure is predominant and where no reinforcement crosses the crack. With reinforcement present another ductile and energy consuming element will complicate the situation and shift the validity of the strength approach to even larger dimensions.

There is another broad field of application of fracture mechanics to concrete structures, usually complex structures, namely within finite element codes. They require proper material models, such as a stress-crack-opening curve, a G_F-value or K_C-values. Great progress has been made in incorporating these quantities in the programs instead of using strength values only. Results of calculations show that shear problems can be better tackled with these models than with strength parameters. However, this paper is not concerned with finite element analysis. The reader is referred to the relevant literature [7,8,9].

4. FUTURE ACTIVITIES

Fracture mechanics is well established in concrete research, but has not yet penetrated into design practice in general. Hawkins [23] has clearly stated the reasons for this state of affairs: "The future role for fracture mechanics in conventional design will depend largely on whether the regulatory authorities see a need for fracture mechanics in relation to public safety, or whether they see fracture mechanics as simply a vehicle for providing a different point of view on provisions which already incorporate an adequate margin for public safety". It is agreed that a new theory should not be introduced only because of its novelty; but if it is superior, then one should at least think about modifying the old one even if no damage or catastrophes have occurred. It is always better to have a sound mechanical model than to stick to empirical relations, without a physical background. At the moment it seems wise to concentrate on tensile, shear and torsion problems. On the experimental side, the appropriate material properties should be specified, such as stress crack opening relation, G_F-value, K_C-value, and the interaction of various loading modes such as crack opening, shear and tearing mode, especially in regard to nonlinear fracture mechanics. Also, testing methods have to be developed. On the theoretical side, procedures have to be developed for using the knowledge in practical design. A few examples have been given, but there are still open questions as to the quantitative treatment. At least, all cases should be treated with nonlinear fracture mechanics: for instance, thermal and shrinkage stresses in conjunction with bending shear and torsion, a field which may be relevant to bridge structures. Another problem is presented by splitting stresses due to anchorage of prestressing tendons in prestressed floor slabs. Obviously, this problem is bound up with public safety and crack propagation in unreinforced concrete. Impact problems in unreinforced structures, such as break water armour units with large dimensions, should be tackled with the aid of fracture mechanics since a great deal of unexplained damage has occurred in the last few years.

In conclusion, two main activities are necessary in the future: to use the knowledge of nonlinear fracture mechanics to establish design charts and formulas for situations where the tensile fracture of concrete is essential, and to proceed with the implementation of fracture mechanics in codes for finite element analysis. Both activities will lead to better modelling of concrete and therefore to clearer and safer design.

ACKNOWLEDGEMENT

The author expresses his gratitude to Prof.Dr.Ir. J. Blaauwendraad for fruitful discussions and valuable remarks on this paper.

REFERENCES

1. CEB-FIP Model Code for concrete structures. Comité Euro-International du Béton. CEB Bulletin No. 124/125-E, Paris 1978.

2. GRIFFITH A. A. , The phenomena of rupture and flow in solids. Phil. Trans. Roy. Soc. (London) A221 (1920), pp. 163-198.

3. INGLIS C.E., Stresses in a plate due to the presence of cracks and sharp corners. Trans. Naval Arch. 55(1913), pp. 219-230.

4. IRWIN G.R., Analysis of stresses and strains near the end of a crack traversing a plate. J. Appl. Mech. 24(1957), pp. 361-364.

5. HILLERBORG A., Analysis of one single crack. In "Fracture Mechanics of Concrete", ed. F.H. Wittmann, Elsevier, Amsterdam 1983, pp. 223-249.

6. BAZANT Z.P., Size effect in blunt fracture: concrete, rock, metal. J. Eng. Mech. ASCE Eng. Mech. Div. 110(1984) no. 4, pp. 518-535.

7. GROOTENBOER H.J., LEIJTEN S.F.C.H., BLAAUWENDRAAD J., Concrete Mechanics. Part C. Numerical models for reinforced concrete structures in plane stress. HERON 26(1981) No. 1c, pp. 83.

8. AMERICAN SOC. OF CIVIL ENG. State-of-the-Art Report on "Finite element analysis of reinforced concrete", New York 1982.

9. INGRAFFEA A.R. et. al., Fracture mechanics of bond in reinforced concrete. J. Structural Eng. ASCE Struct. Div. 110(1984) No. 4, pp. 871-890.

10. GUSTAFSSON P.J., HILLERBORG A., Improvements in concrete design achieved through the application of fracture mechanics. In "Application of fracture mechanics to cementitious composites", ed. by S.P. Shah, Northwestern University, Evanston, USA, Sept. 1984, pp. 487-500.

11. REINHARDT H.W., Zur Kombination Bruchmechanik, Beton, Wärmespannungen. Materialprüfung 16(1974) No. 6, pp. 174-176.

12. SIH G.C., Handbook of stress intensity factors for researchers and engineers. Lehigh University, Bethlehem 1973.

13. MINDESS S., The application of fracture mechanics to cement and concrete: a historical review. In "Fracture mechanics of concrete", ed. by F.H. Wittmann, Elsevier, Amsterdam 1983, pp. 1-30.

14. BAZANT Z.P., Ed. Mechanics of geomaterials: rocks, concretes, soils. William Prager Symp., Northwestern University, Evanston, USA, Sept. 1983.

15. KOENIG G., JAHN, M., Ueber die verschiedenen Erscheinungsformen der Betonzugfestigkeit und ihre Bedeutung für das Tragverhalten von Massivbauten. Beton- und Stahlbetonbau 78(1983) No. 9, pp. 243-247, No. 10, pp. 281-286.

16. RAHARINAIVO A., BRACHET M., Corrosion of reinforcement, materials and control. In "Durability of concrete structures", ed. by S. Rostam, Copenhagen, May 1983, pp. 299-302.

17. CARPINTERI A., A Fracture mechanics model for reinforced concrete collapse. IABSE Coll. Advanced mechanics of reinforced concrete, Delft 1981, pp. 17-30.

18. REINHARDT H.W., Length influence on bond shear strength of joints in composite precast concrete slabs. Intern. J. Cement Composites and Lightweight Concrete 4(1982) No. 3, pp. 139-143.

19. HAWKINS N.M., WYSS A.N., MATTOCK A.H., Fracture analysis of cracking in concrete beams. J. Struct. Div. ASCE 103(1977) No. ST5, pp. 1015-1030.

20. REINHARDT H.W., Massstabeinfluss bei Schubversuchen im Licht der Bruchmechanik. Beton- und Stahlbetonbau 76(1981) No. 1, pp. 19-21.

21. BAZANT Z.P., KIM J.K., Size effect in shear failure of longitudinally reinforced beams. ACI-9.81 (1984) No. 5, pp. 456-468.

22. WYSS A.N., Application of fracture mechanics to cracking in concrete beams. Ph.D. Thesis, University of Washington 1971 (cited by [23]).

23. HAWKINS N.M., The role for fracture mechanics in conventional reinforced concrete design. In "Application of fracture mechanics to cementitious composites", ed. by S.P. Shah, Northwestern University, Evanston, USA, September 1984 (separate paper).

24. BLAUEL S.G., Thermisch induzierte elastische Spannungen und ihr Einfluss auf Auslösung und Ausbreitung von Brüchen. Diss. Universität Karlsruhe, 1970.

Leere Seite
Blank page
Page vide