Zeitschrift: IABSE proceedings = Mémoires AIPC = IVBH Abhandlungen
Band: 12 (1988)
Heft: P-130: A design formula for thin-walled steel box columns

Artikel: A design formula for thin-walled steel box columns
Autor: Shanmugam, N.E. / Chiew, S.P. / Lee, S.L.
DOI: https://doi.org/10.5169/seals-41132

Nutzungsbedingungen
Die ETH-Bibliothek ist die Anbieterin der digitalisierten Zeitschriften auf E-Periodica. Sie besitzt keine Urheberrechte an den Zeitschriften und ist nicht verantwortlich für deren Inhalte. Die Rechte liegen in der Regel bei den Herausgebern beziehungsweise den externen Rechteinhabern. Das Veröffentlichen von Bildern in Print- und Online-Publikationen sowie auf Social Media-Kanälen oder Webseiten ist nur mit vorheriger Genehmigung der Rechteinhaber erlaubt. Mehr erfahren

Conditions d'utilisation
L'ETH Library est le fournisseur des revues numérisées. Elle ne détient aucun droit d'auteur sur les revues et n'est pas responsable de leur contenu. En règle générale, les droits sont détenus par les éditeurs ou les détenteurs de droits externes. La reproduction d'images dans des publications imprimées ou en ligne ainsi que sur des canaux de médias sociaux ou des sites web n'est autorisée qu'avec l'accord préalable des détenteurs des droits. En savoir plus

Terms of use
The ETH Library is the provider of the digitised journals. It does not own any copyrights to the journals and is not responsible for their content. The rights usually lie with the publishers or the external rights holders. Publishing images in print and online publications, as well as on social media channels or websites, is only permitted with the prior consent of the rights holders. Find out more

Download PDF: 13.01.2026

ETH-Bibliothek Zürich, E-Periodica, https://www.e-periodica.ch

A Design Formula for Thin-Walled Steel Box Colums

Formule de dimensionnement pour poteaux métalliques creux à parois minces

Bemessung von Stahlstützen mit dünnwandigen Hohlquerschnitten

N.E. SHANMUGAM
Senior Lecturer
Nat. Univ. of Singapore
Singapore

Dr. N.E. Shanmugam obtained his Ph.D. from the Univ. of Wales, Cardiff, UK. He is a member of the Inst. of Structural Engineers, London, ASCE, Inst. of Engineers, India and Inst. of Engineers, Singapore. His research interest includes theoretical and experimental study of plates and plated structures.

S.P. CHIEW
Structural Engineer
T.H. Chuah & Assoc. (Pte) Ltd.
Singapore

Dr. S.P. Chiew completed his B.Sc. (Eng) and M.Sc. (Eng) at the University of Wales, Cardiff, UK and Ph.D. at the National University of Singapore. Currently, he works as a structural engineer in a consulting firm. He is responsible for the design and supervision of both reinforced concrete and steel structures.

S.L. LEE
Prof. of Civil Eng.
Nat. Univ. of Singapore
Singapore

Prof. S.L. Lee obtained his Ph.D. from the Univ. of California, Berkeley. He is a Fellow of the Inst. of Civil Engineers, London, ASCE and Inst. of Engineers, Singapore. He has served as a consultant in many construction projects related to structural and geotechnical engineering.

SUMMARY

A simple formula for calculating the ultimate strength of thin-walled steel box columns subjected to the combined action of axial load and unequal end moments is proposed. The formula accounts for the effects of local buckling of component plates welding residual stresses and initial column curvatures. Development of the formula is briefly described and its accuracy is verified by comparing predicted failure loads with available test data. The proposed formula is simple to use and is suitable for repeated analyses often required at the design stage.

RÉSUMÉ

Les auteurs proposent une formule simple pour le calcul de la résistance ultime de poteaux métalliques reconstitués en profil creux et parois minces soumis à l'action combinée d'un effort normal et de moments inégaux aux extrémités. La formule tient compte des effets du voilement local des parois, des contraintes résiduelles de soudure et de la courbure initiale du poteau. L'établissement de la formule est décrit, sa précision est vérifiée par comparaison avec des résultats d'essais. La formule proposée est d'une utilisation simple, elle est pratique pour des calculs qu'il faut souvent répéter au stade du projet.

ZUSAMMENFASSUNG

Es wird eine einfache Traglastformel für Stahlstützen mit dünnwandigen Hohlquerschnitten unter kombinierter Beanspruchung (Normalkraft und ungleichen Endbiegemomenten) vorgestellt. Sie berücksichtigt lokales Beulen, Eigenspannungen der Bleche und Vorverformungen der Stütze. Die Herleitung der Gleichung wird kurz beschrieben und die Genauigkeit durch Vergleiche mit Versuchsdaten überprüft. Die vorgeschlagene Bemessungsformel ist einfach und eignet sich für wiederholte Berechnungen, wie sie beim Entwurf oft vorkommen.

1. INTRODUCTION

The effects of local buckling are important in steel box columns built up from thin plates. It interacts with overall column buckling and causes a significant reduction in load carrying capacity. Neglect of such effects at design stage will result in overestimation of ultimate strength. In addition, the adverse effects of welding residual stress and initial column and plate out-of-straightness should be considered.

In the field of cold-formed steel construction, the effect of local buckling of plate elements (1,2) is accounted for in terms of effective width (3). The new British standard for use of structural steelwork, BS5950: Part 1: 1985 (4) has adopted an empirical approach based on reduced yield stress to allow for local buckling of component plates in compression members. In addition, a further reduction of 20 N/mm^2 in yield stress is applied to box sections fabricated from plates by welding. Although the availability of such empirical techniques is a great asset, there is also a need for simple and rapid analytical methods that can be used conveniently at the design stage. Such methods are useful for a designer to obtain a true understanding of the behaviour of the structure without having to interpolate or extrapolate from available empirical values.

The authors have previously (5) described a method for predicting the ultimate load carrying capacity of thin-walled box columns subjected to axial force and equal end moments. Simplified piecewise linear stress-strain relationships to account for local buckling of component plates were proposed. The method was subsequently generalised to consider thin-walled box colums under arbitrary end loads (6). The analytical predictions were found to agree well with experimental collapse loads of box column models (7,8). Based on the analyses, column curves for a wide range of parameters such as plate width-thickness ratio (b/t), column slenderness ratio (λ), moment ratio (κ), level of welding residual stress (σ'_{rc}) and initial column curvature (ϕ_i), were proposed. Although simple, the method needs the use of computer and, the column curves should be interpolated to obtain the failure load of columns with intermediate values of parameters.

Simple design formula has,therefore, been proposed by curve fitting the data obtained from the column curves. The present paper describes, briefly, the method to compute the ultimate strength of thin-walled box columns subjected to arbitrary end loads. Development of the simple interaction formula which accounts for axial load, unequal end moments and plate width-thickness ratio is presented. The formula allows for fixed level of residual stress and initial column crookedness. The accuracy of the formula is established by applying it to many experimental columns that are available in the published literature.

2. METHOD OF ANALYSIS

The analytical method consists of two stages; in the first stage, moment-curvature-thrust (M-ϕ-P) relationships are developed for individual cross sections and in the second stage the column analysis is carried out by integrating the governing differential equation along the length of the column. The technique of Lee and Hauck (9,10) and Rossow, et al. (11) who employed the stability criterion developed by Horne (12) is used to construct the envelope of equilibrium curves and then the column curves.

2.1 Assumptions

1. The material is homogeneous and isotropic in both the elastic and plastic states. 2. Material is characterised by an ideal elastic-perfectly

plastic stress-strain curve for tension and, the local buckling of the flange plate under compression is allowed by applying an appropriate stress strain curve from the set of curves given in Fig 1. The portion of the web plate under compression is treated in a similar manner to that of the compression plate by applying the stress strain curve with the assumption that 'b' is equal to the depth of the compression zone. 3. Strain distribution is linear across the depth of the cross section. 4. The local buckling of the plate due to shear is ignored. 5. Residual stresses in the component plates are in self-equilibrium and are distributed in the form shown in Fig. 2. 6. No strain reversal at any point. 7. The deflections are small and hence the curvature can be expressed as the second derivative of deflection.

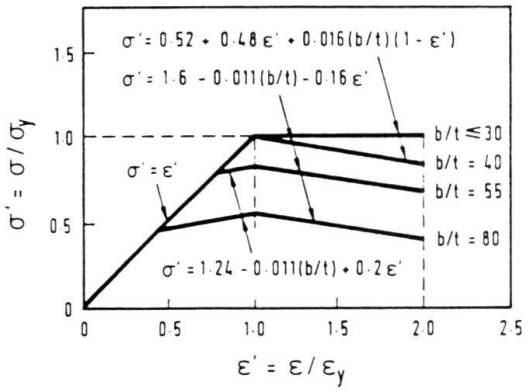

Fig. 1 Piecewise Linear Stress-strain Curves

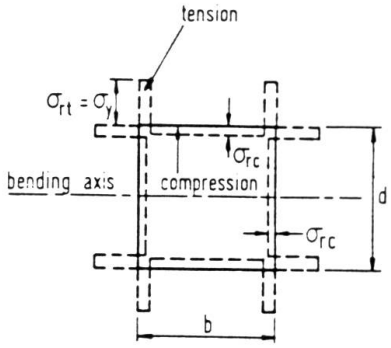

Fig. 2 Residual stress pattern

2.2 Moment-Curvature-Thrust (M-Φ-P) Relationships

The moment-curvature-thrust (M-Φ-P) relationships are computed numerically using the method similar to that adopted by Nishino, et al. (13). A section of the column is divided into small elements as shown in Fig. 3, the coordinate system being chosen to pass through the centroid of the section. When the section is under the action of bending moment and axial thrust, the strain at any element i can be expressed in the non-dimensional form

$$\frac{\varepsilon_i}{\varepsilon_y} = \frac{\varepsilon_c}{\varepsilon_y} + \phi \frac{2y_i}{d} + \frac{\varepsilon_{ri}}{\varepsilon_y} \qquad \text{..... (1)}$$

in which ε_i = total strain at element i, positive if in tension; ε_c = strain at the centroid of the section; ϕ = curvature nondimensionalised by the curvature

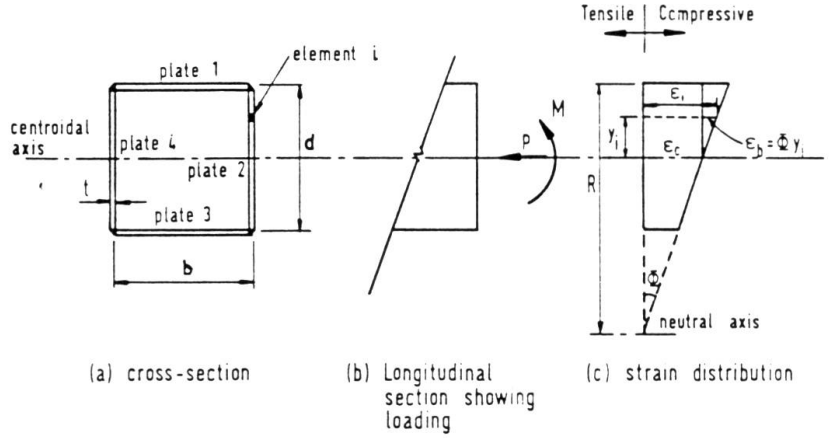

Fig. 3 Thin-walled Box Section

at initial yielding for bending, $\Phi_y = 2\varepsilon_y/d$; y_i = distance of the centre of element i to the centroidal axis; ε_{ri} = residual strain at element i; ε_y = yield strain; and d = depth of cross-section.

The corresponding stress σ_i is obtained by making use of the appropriate stress-strain curves given in Fig. 1, σ_i being positive if in tension.

The axial thrust and moment are then computed by making use of the following equilibrium equations.

$$p = -\frac{1}{A}\sum_{i=1}^{n}\frac{\sigma_i}{\sigma_y}\Delta A_i \qquad \text{..... (2)}$$

$$m = \frac{1}{Z}\sum_{i=1}^{n}\frac{\sigma_i}{\sigma_y}y_i\Delta A_i \qquad \text{..... (3)}$$

where $p = P/P_y$; $m = M/M_y$; n = total number of elements; A = area of cross-section; z = plastic modulus; ΔA_i = area of element i; P_y = squash load; and $M_y = \sigma_y Z$.

The moment developed about the centroidal axis of a cross section can be obtained numerically for a given value of applied axial thrust and curvature. Successive values of R can be interpolated and the correct value is determined such that the compressive force from the resulting strain distribution defined by R and ϕ obtained from Eqs. 1 and 2 matched the given axial thrust. The resulting moment can be obtained from Eq. 3 and the procedure repeated for other values of ϕ.

2.3 Column Analysis

Box columns under eccentric load can be treated by considering the cantilever column subjected to axial force P, transverse shear force Q and bending moment M at the free end as shown in Fig. 4. Initial crookedness is represented by constant curvature throughout the length of the column. The equilibrium condition and the curvature-displacement relation are given, respectively, in non-dimensional form as

$$m = m_f - \frac{Ar}{Z}(pw + qx) \qquad \text{..... (4)}$$

$$\frac{d^2w}{dx^2} = (\phi + \phi_i)\frac{2r}{d} \qquad \text{..... (5)}$$

in which $m = M/M_y$, $m_f = M_f/M_y$, $p = P/P_y$, $q = Q/P_y\sqrt{\varepsilon_y}$, $x = X\sqrt{\varepsilon_y}/r$, $w = W/r$, $\phi = \Phi/\Phi_y$, $\Phi_y = 2\varepsilon_y/d$.

The deflected shape of a column for given values of m_f, p and q and prescribed values of ϕ_i can be obtained by integrating Eq. 5 in view of Eq. 4. and the m-ϕ-p relationship for the particular cross-section developed earlier. In order to simplify the integration of Eq. 5 a numerical procedure similar to that used in Ref. (5) and (6) is adopted.

2.4 Equilibrium Curves and Column Curves

The relation between m and x can be obtained for a set of p, q and ϕ_i and various assumed values of m_f. The m-x relationships thus obtained are plotted as shown in Fig. 5 and they are referred to as equilibrium curves. Applying Horne's (12) stability criterion the envelopes of the equilibrium curves can be constructed as indicated in the figure. The envelope is the boundary of the

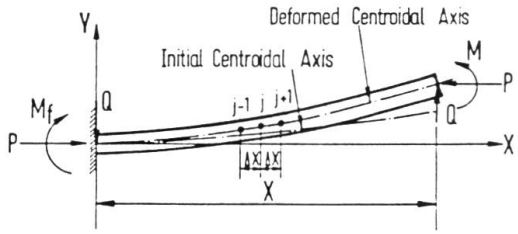

Fig. 4 Cantilever Column with Initial Curvature

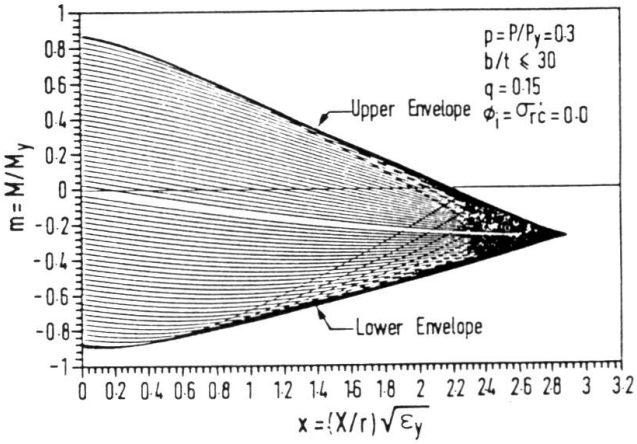

Fig. 5 Equilibrium Curves

stable equilibrium domain of the cantilever column of certain length subjected to the combined action of end moment, axial thrust and shear.

It is more useful, for design purposes, to present the ultimate strength of box columns in the form of column curves. The equations developed for cantilever column can be extended to the treatment of simply supported box columns subjected to unequal end moments as shown in Fig. 6. The simply supported column may be treated as two cantilever columns of lengths X_1 and X_2 with fixed ends at point O. The part of the column to the right of point O corresponds to the cantilever column of Fig. 4 with $Q = M(1-\kappa)/L$ whilst the part to the left of point O corresponds to a column under a transverse load Q opposite in sense to that shown in Fig. 4 and hence care should be exercised in using the appropriate envelopes.

Typical envelopes for the whole length of a column with particular values of ϕ_i and q and various magnitudes of p are shown in Fig. 7. The envelopes on the left correspond to the cantilever column of length X_1 and on the right to the cantilever column of length X_2. For given values of p and q, at the limit of stability, the points (m, λ_1) and $(\kappa m, \lambda_2)$ must be on the envelopes correponding to p and q. The critical values of λ_1 and λ_2 must satisfy the equations

$$\lambda_1 + \lambda_2 = \lambda \qquad \text{..... (6)}$$

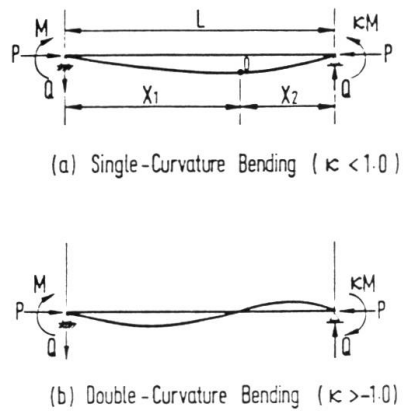

Fig. 6 Simply-supported columns

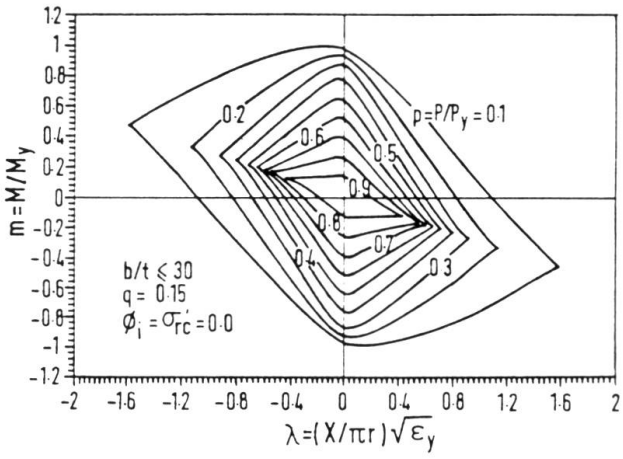

Fig. 7 Envelopes of Equilibrium Curve

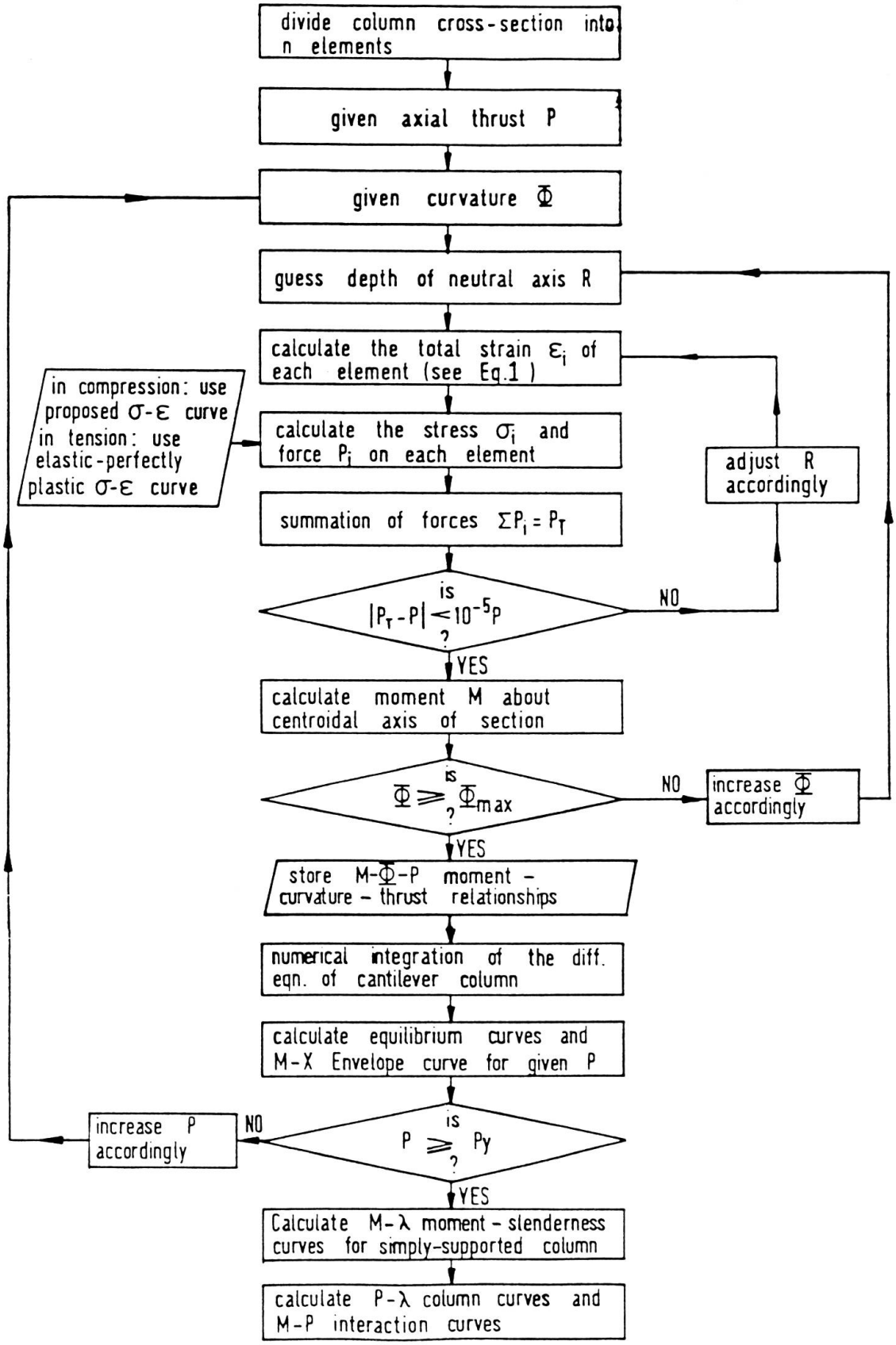

Fig. 8 Flow Chart for Column Analysis

and

$$q = \frac{Z}{Ar} \frac{m(1 - \kappa)}{\pi \lambda} \qquad \text{..... (7)}$$

To construct a typical column curve, a value of λ is first assumed along with the prescribed values of κ, m and p. The value of q is then determined from Eq. 7 and the values of λ_1 and λ_2 and hence λ are computed from the envelopes corresponding to the set of values of p and q. When the assumed value of λ matches the computed one, the correct value of p is then determined. The whole process is repeated for another λ value. A family of column curves for various values of m and κ can thus be constructed.

3. NUMERICAL STUDY

Various steps involved in the column analysis are summarised in the flow chart as shown in Fig. 8; a computer program was written to carry out the analyses. Using this program, thin-walled box columns having several values of plate width-thickness ratios (b/t = 30,40, 55,80), column slenderness ratios (λ = 0,0.2,0.4, ... 1.8), end moments (m = 0,0.1, 0.3), moment ratios (κ = 0,0.5, 1.0, -0.5, -1.0), initial curvatures (ϕ_i = 0, 0.1, 0.2) and residual stresses (σ'_{rc} = 0, 0.1, 0.2) were analysed for ultimate strengths, and column curves were plotted. Typical column curves are shown in Fig. 9(a-b) in which curves are presented for m = 0,0.1, 0.3. Fig. 9(a) shows the curves for columns in which there is no local buckling whilst the effect of local buckling on column strength is clearly illustrated in Fig. 9(b).

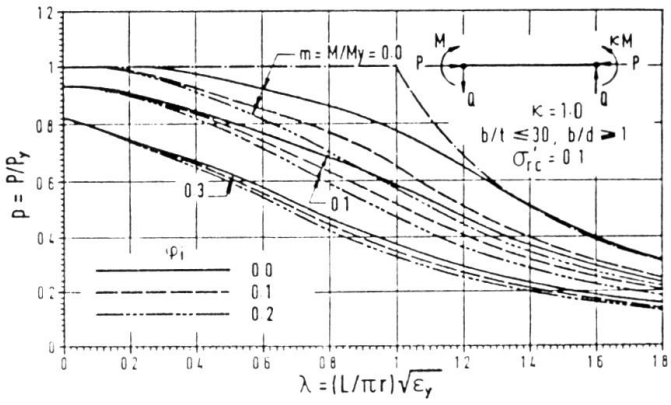

(a)

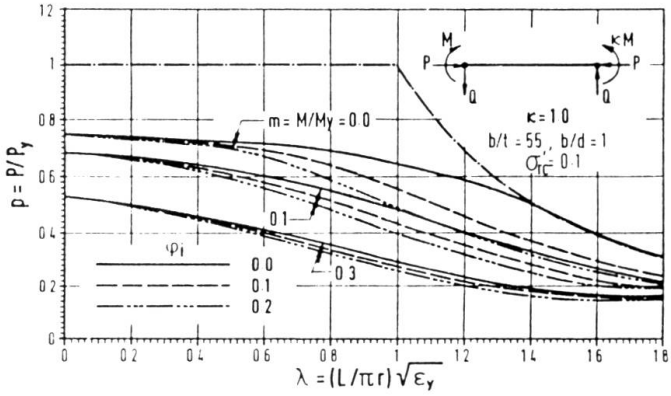

(b)

Fig. 9(a-b) Typical Column Curves

In Fig. 10, the column curve corresponding to m = 0, b/t $\leqslant$ 30, σ'_{rc} = 0.2 and ϕ_i = 0.1 is shown along with those of ECCS (14), SSRC (15) and BS5950 (4). The proposed column curve is seen to lie very close to the other curves. Therefore, computed curves corresponding to fixed values of 0.2 and 0.1, respectively, for compressive residual stress and initial curvature were used to develop the proposed design formula.

4. PROPOSED DESIGN FORMULA

Based on the column curves obtained in the previous section, the following formula for box columns subjected to axial load and uniaxial bending moment is proposed:

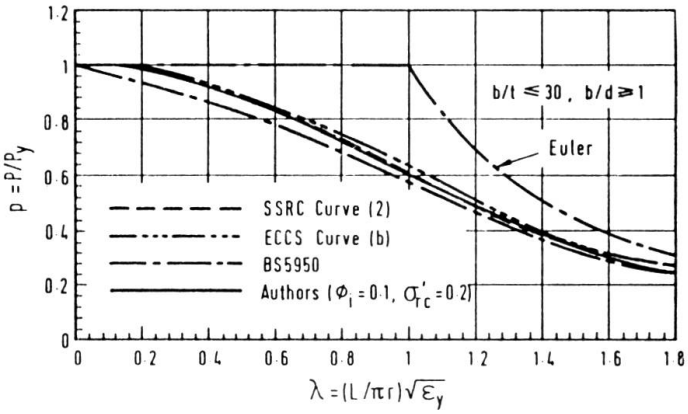

Fig. 10 Comparison of Column Curves

$$\frac{P_{max}}{P_u} + \frac{C_m M_{max}}{M_u(1 - P_{max}/P_e)} \leq 1.0 \qquad \text{..... (8)}$$

where

$$\frac{P_u}{P_y} = 0.64^{\lambda^2} \qquad \text{for } \lambda \leq 1.5, \quad b/t \leq 30$$

$$= 0.87/\lambda^2 \qquad \text{for } \lambda > 1.5, \quad b/t \leq 30$$

$$= \frac{0.64^{\lambda^2}}{0.09(b/t)^{0.71}} \qquad \text{for } \lambda \leq 1.5, \quad 30 \leq b/t \leq 80$$

$$= \frac{0.87/\lambda^2}{0.09(b/t)^{0.71}} \qquad \text{for } \lambda > 1.5, \quad 30 \leq b/t \leq 80$$

$$\frac{M_u}{M_y} = 1.0 \qquad \text{for } b/t \leq 40$$

$$= 22.17/(b/t)^{0.84} \qquad \text{for } 40 \leq b/t \leq 80$$

$$\frac{P_e}{P_y} = 1/\lambda^2$$

$$C_m = 0.6 + 0.4\kappa \geq 0.6$$

in which P_y = squash load, M_y = plastic moment, κ = end moment ratio, P_{max} = maximum axial load, $M_{max} = P_{max}.e$, e = eccentricity and $\lambda = (L/\pi r)\sqrt{\varepsilon_y}$.

The proposed formula can be used to predict the ultimate load carrying capacity of simply-supported square or rectangular box columns subjected to axial load and uniaxial bending moment. It is assumed, in the case of rectangular box columns, that the bending is applied about the weaker axis. The formula allows for column imperfections due to welding residual stresses and initial curvature and accounts for the effect of local buckling of the component plates.

5. ACCURACY OF THE PROPOSED FORMULA

To establish the validity of the formula, the ultimate collapse loads of a number of test columns available in the published literature were predicted. 35 large-size column tests have been carried out by Usami and Fukumoto (16,17); the column slenderness (L/r) was varied from 35 to 65 whilst the plate width-thickness ratio (b/t) ranged from 22 to 59. Tests on 20 small-scale box columns were recently reported by Chiew, et al. (7) in which higher plate width-thickness ratios, up to 80, were used. In all these tests local and overall interaction buckling were considered. Details of all the test columns, measured column imperfections, details of the test rig, instrumentation and full description of the tests are given in Refs. 7, 16 and 17.

The values of the observed load at failure of the various test columns may be compared with the corresponding values predicted by the design formula presented in the previous section. The results are also compared with the corresponding predicted values using the column curves(5) and BS5950(4). Because the yield strength of steel in the test columns is not constant, valid comparisons can only be made if the results are presented in a non-dimensional form. Thus the observed collapse loads together with their predicted strengths are presented as ratios of the collapse load to their corresponding squash load.

Tables 1, 2 and 3 give the comparisons of test results and predicted strengths. In each of the tables, the mean value of predicted to observed strength and the standard deviations are also given. These results are also plotted in graphical form in Figs. 11(a-b). The comparisons show that the formula presented in this paper gives reasonable correlations. The predictions in most cases lie within ± 15%. The British Standard, however, seems to be highly conservative in all cases.

SPECIMEN	EXPERIMENTAL	COLUMN CURVES (5)		FORMULA (EQ. 11)		BS5950 (4)	
	P_{exp}/P_y	P_{cal}/P_y	P_{cal}/P_y / P_{exp}/P_y	P_{cal}/P_y	P_{cal}/P_y / P_{exp}/P_y	P_{cal}/P_y	P_{cal}/P_y / P_{exp}/P_y
(1)	(2)	(3)	(4)	(5)	(6)	(7)	(8)
S-35-22	0.852	0.846	0.993	0.838	0.984	0.624	0.732
S-35-33	0.722	0.834	1.155	0.778	1.078	0.386	0.535
S-35-38	0.621	0.820	1.320	0.699	1.126	0.329	0.530
S-35-44	0.544	0.770	1.415	0.630	1.158	0.278	0.511
S-50-22	0.740	0.700	0.946	0.679	0.918	0.548	0.741
S-50-27	0.672	0.720	1.071	0.696	1.036	0.445	0.662
S-50-33	0.670	0.704	1.051	0.638	0.952	0.356	0.531
R-50-22	0.743	0.720	0.969	0.698	0.939	0.556	0.748
R-50-27	0.731	0.720	0.985	0.691	0.945	0.444	0.607
R-50-33	0.709	0.704	0.993	0.642	0.906	0.357	0.504
R-50-38	0.639	0.700	1.095	0.580	0.908	0.305	0.477
R-50-44	0.579	0.673	1.162	0.646	1.116	0.259	0.447
R-65-22	0.593	0.565	0.953	0.546	0.921	0.460	0.776
R-65-27	0.637	0.565	0.887	0.537	0.843	0.383	0.601
R-65-33	0.585	0.565	0.966	0.495	0.846	0.317	0.542
ER-50-22	0.557	0.560	1.005	0.523	0.939	0.460	0.826
ER-50-27	0.557	0.500	0.898	0.521	0.935	0.366	0.657
ER-50-33	0.542	0.548	1.011	0.495	0.913	0.291	0.537
Mean			1.049		0.970		0.609
Standard Deviation			0.135		0.091		0.115

Table 1 Comparison of Ultimate Loads (Usami & Fukumoto; Ref. 16)

SPECIMEN	EXPERIMENTAL	COLUMN CURVES (5)		FORMULA (EQ. 11)		BS5950 (4)	
	P_{exp}/P_y	P_{cal}/P_y	P_{cal}/P_y / P_{exp}/P_y	P_{cal}/P_y	P_{cal}/P_y / P_{exp}/P_y	P_{cal}/P_y	P_{cal}/P_y / P_{exp}/P_y
(1)	(2)	(3)	(4)	(5)	(6)	(7)	(8)
R-40-29	0.798	0.800	1.002	0.833	1.044	0.510	0.639
R-40-44	0.644	0.720	1.118	0.625	0.970	0.311	0.483
R-40-58	0.498	0.596	1.197	0.515	1.034	0.225	0.452
R-65-29	0.619	0.580	0.937	0.621	1.003	0.426	0.688
R-65-44	0.521	0.500	0.960	0.459	0.881	0.273	0.524
R-65-58	0.441	0.408	0.925	0.381	0.864	0.201	0.456
ER-40-29e_1	0.610	0.600	0.984	0.636	1.043	0.412	0.675
ER-40-44e_1	0.501	0.548	1.094	0.508	1.014	0.254	0.507
ER-40-58e_1	0.391	0.460	1.176	0.418	1.069	0.183	0.468
ER-40-44e_2	0.411	0.463	1.126	0.429	1.044	0.210	0.511
ER-65-29e_1	0.435	0.445	1.023	0.458	1.053	0.353	0.811
ER-65-44e_1	0.406	0.441	1.086	0.375	0.924	0.229	0.564
ER-65-58e_1	0.312	0.345	1.106	0.313	1.003	0.167	0.535
ER-65-44e_2	0.325	0.378	1.163	0.324	0.997	0.195	0.600
ER-65-58e_2	0.268	0.323	1.205	0.271	1.011	0.142	0.530
ES-40-44e_1	0.441	0.512	1.161	0.507	1.150	0.250	0.567
ES-40-58e_1	0.363	0.418	1.152	0.417	1.149	0.181	0.499
Mean			1.083		1.015		0.559
Standard Deviation			0.090		0.075		0.097

Table 2 Comparison of Ultimate Loads (Usami & Fukumoto; Ref. 17)

SPECIMEN	EXPERIMENTAL	COLUMN CURVES (5)		FORMULA (EQ. 11)		BS5950 (4)	
	P_{exp}/P_y	P_{cal}/P_y	P_{cal}/P_y / P_{exp}/P_y	P_{cal}/P_y	P_{cal}/P_y / P_{exp}/P_y	P_{cal}/P_y	P_{cal}/P_y / P_{exp}/P_y
(1)	(2)	(3)	(4)	(5)	(6)	(7)	(8)
A-S-40-10	1.119	0.900	0.804	0.805	0.719	0.608	0.543
A-S-40-25	1.036	0.900	0.869	0.783	0.756	0.576	0.556
A-S-40-33	0.897	0.870	0.970	0.761	0.848	0.557	0.621
A-S-40-45	0.785	0.828	1.055	0.721	0.918	0.530	0.675
A-S-40-56	0.802	0.818	1.020	0.679	0.847	0.505	0.630
A-S-57-56	0.562	0.571	1.016	0.527	0.938	0.325	0.578
A-S-62-10	0.687	0.661	0.962	0.584	0.850	0.341	0.496
A-S-62-25	0.590	0.630	1.073	0.568	0.963	0.323	0.547
A-S-62-30	0.581	0.638	1.098	0.557	0.959	0.316	0.544
A-S-80-10	0.534	0.500	0.936	0.492	0.921	0.248	0.464
A-S-80-25	0.507	0.480	0.947	0.479	0.945	0.234	0.461
A-S-80-33	0.496	0.470	0.948	0.465	0.938	0.227	0.458
A-S-80-56	0.321	0.360	1.121	0.414	1.289	0.209	0.651
A-R-40-40	0.884	0.860	0.973	0.739	0.836	0.541	0.612
A-R-57-40	0.740	0.680	0.919	0.574	0.776	0.345	0.466
A-R-57-52	0.669	0.650	0.972	0.538	0.804	0.330	0.493
A-R-80-40	0.563	0.480	0.853	0.366	0.650	0.221	0.393
B-S-40-33	0.768	0.670	0.872	0.617	0.803	0.443	0.577
B-S-57-33	0.556	0.570	1.025	0.475	0.854	0.262	0.471
B-S-80-33	0.412	0.400	0.971	0.371	0.900	0.185	0.449
Mean			0.970		0.876		0.534
Standard Deviation			0.081		0.126		0.078

Table 3 Comparison of Ultimate Loads (Chiew, et al.; Ref. 7)

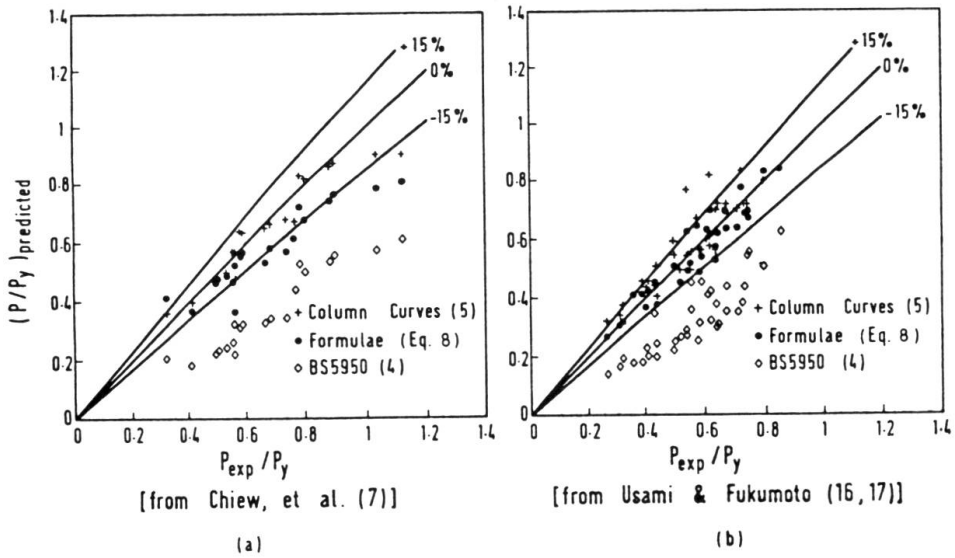

Fig. 11(a-b) Accuracy of Design Formulae

6. CONCLUSIONS

There is significant reduction in the load carrying capacity of thin-walled box columns due to the local buckling of component plates and its interaction with overall buckling. In a column anaylsis, such effects can be taken into account by the use of appropriate stress-strain relationship which may be obtained from the set of curves given in Fig. 1. Based on the analysis, a simple design formula for computing the collapse load of thin-walled box columns subjected to the combined action of axial load and end moments is presented. The formula allows for local buckling of component plates and fixed values of initial column imperfections.

Results presented for box columns of various plate width-thickness ratios, column slendernesses and shapes have confirmed the accuracy of the design formula. Due to its simplicity, the proposed formula is suitable for the many repetitive analyses sometimes required at the design stage. Comparisons have also been made with the authors' column curves (5) and BS5950 (4) for box column design. The column curves are seen to be able to predict the failure loads with reasonable accuracy whilst BS5950 seems to be highly conservative.

7. REFERENCES

1. American Iron and Steel Institute (AISI), 'Cold-Formed Steel Design Manual,' AISI, Washington D.C., May, 1983, 290 pp.

2. Pekoz, T., 'Development of a Unified Approach to the Design of Cold-Formed Steel Members,' Report SG86-4, AISC, Washington D.C., May, 1986, 200 pp.

3. Winter, G., 'Strength of Thin Steel Compression Flanges,' Transactions, ASCE, Vol. 112, 1947, pp 527-554.

4. British Standards Institution, 'BS5950 - Structural Use of Steelwork in Building ; Part I : Code of Practice for Design in Simple and Continuous Construction, Hot Rolled Sections,' BSI, 1985, 111 pp.

5. Shanmugam, N.E., Chiew, S.P. and Lee, S.L., 'Strength of Thin-Walled Steel Box Columns,' J. Struct. Engrg., ASCE, Vol. 113, No. 4, April, 1987, pp 818-831.

6. Lee, S.L., Shanmugam, N.E. and Chiew, S.P., 'Thin-Walled Steel Box Columns under Arbitrary End Loads,' J. Struct. Engrg., ASCE, Vol. 114, No. 6, June, 1988, pp. 1390-1402.

7. Chiew, S.P., Lee, S.L. and Shanmugam, N.E., 'Experimental Study of Thin-Walled Steel Box Columns,' J. Struct. Engrg., ASCE, Vol. 113, Oct., 1987, pp 2208-2220.

8. Lee, S.L., Chiew, S.P. and Shanmugam, N.E., 'Local and Overall Buckling of Steel Box Columns,' Proc. of the Int. Conf. on Steel and Aluminium Structures, Cardiff, Elsevier App. Science Publishers, London and New York, July, 1987, pp 438-449.

9. Hauck, G.F. and Lee, S.L., 'Stability of Elasto-Plastic Wide-Flange Columns,' J. Struct. Div., ASCE, Vol. 89, No. ST6, Dec., 1963, pp 297-324.

10. Lee, S.L. and Hauck, G.F., 'Buckling of Steel Columns under Arbitrary End Loads,' J. Struct. Div., ASCE, Vol. 90, No. ST2, April, 1964, pp 179-200.

11. Rossow, E.C., Barney, G.B. and Lee, S.L., ' Eccentrically Loaded Steel Columns with Initial Curvature,' J. Struct. Div., ASCE, Vol. 93, No. ST2, April, 1967, pp 339-358.

12. Horne, M.R., ' The Elastic-Plastic Theory of Compression Members,' J. of the Mech. and Physics of Solids, Vol. 4, 1956, pp 104-120.

13. Nishino, F., Kanchanalai, T. and Lee, S.L., ' Ultimate Strength of Wide Flange and Box Columns,' Proc. of the Int. Colloquium on Column Strength, Paris, Nov., 1972, pp 254-265.

14. European Convention for Constructional Steelwork (ECCS), 'European Recommendations for Steel Construction,' The construction Press, London and New York, March, 1978, 355 pp.

15. Structural Stability Research Council (SSRC), 'Guide to Stability Design for Metal Structures,' ed. by Johnston, B.G., 3rd Edition, John Wiley and Sons, New York, 1976, 616 pp.

16. Usami, T. and Fukumoto, Y., 'Local and Overall Buckling of Welded Box Columns,' J. Struct. Div., ASCE, Vol. 108, No. ST3, March, 1982, pp 525-542.

17. Usami, T. and Fukumoto, Y., 'Welded Box Compression Mmebers,' J. Struct. Engrg., ASCE, Vol. 110, No. 10, Oct., 1984,, pp 2457-2470.