Zeitschrift: IABSE structures = Constructions AIPC = IVBH Bauwerke
Band: 14 (1990)
Heft: C-51: Structures in Belgium

Artikel: Lift for boats at Strépy-Thieu (Belgium)
Autor: Remouchamps, M.
DOI: https://doi.org/10.5169/seals-22191

Nutzungsbedingungen
Die ETH-Bibliothek ist die Anbieterin der digitalisierten Zeitschriften auf E-Periodica. Sie besitzt keine Urheberrechte an den Zeitschriften und ist nicht verantwortlich für deren Inhalte. Die Rechte liegen in der Regel bei den Herausgebern beziehungsweise den externen Rechteinhabern. Das Veröffentlichen von Bildern in Print- und Online-Publikationen sowie auf Social Media-Kanälen oder Webseiten ist nur mit vorheriger Genehmigung der Rechteinhaber erlaubt. Mehr erfahren

Conditions d'utilisation
L'ETH Library est le fournisseur des revues numérisées. Elle ne détient aucun droit d'auteur sur les revues et n'est pas responsable de leur contenu. En règle générale, les droits sont détenus par les éditeurs ou les détenteurs de droits externes. La reproduction d'images dans des publications imprimées ou en ligne ainsi que sur des canaux de médias sociaux ou des sites web n'est autorisée qu'avec l'accord préalable des détenteurs des droits. En savoir plus

Terms of use
The ETH Library is the provider of the digitised journals. It does not own any copyrights to the journals and is not responsible for their content. The rights usually lie with the publishers or the external rights holders. Publishing images in print and online publications, as well as on social media channels or websites, is only permitted with the prior consent of the rights holders. Find out more

Download PDF: 27.01.2026

ETH-Bibliothek Zürich, E-Periodica, https://www.e-periodica.ch

3. Lift for Boats at Strépy-Thieu (Belgium)

Owner:	*Ministry of Public Works, Belgium*
Engineers:	*Ministry of Public Works and Ascacentre*
Contractors:	*Ascacentre (temporary association of civil engineering and constructional steelwork mechanical, and electrical companies)*
Works duration:	*12 years*
Service date:	*1994*
Quantities:	*– Excavations: 6 billions m³* *– Concrete: 200000 t* *– Steel: 19000 t*

In order to replace the four existing lifts of 350 t gauge located on the canal between Mons and La Louvière, by only one structure enabling a 1350 t ship to pass through, a lift to clear a fall of 73 m was chosen.

This project is under construction on a new canal section at Strépy-Thieu.

Civil engineering

A few dimensions give an idea of the size of the works:
- length: 130 m
- width: 81 m
- total height: 117 m

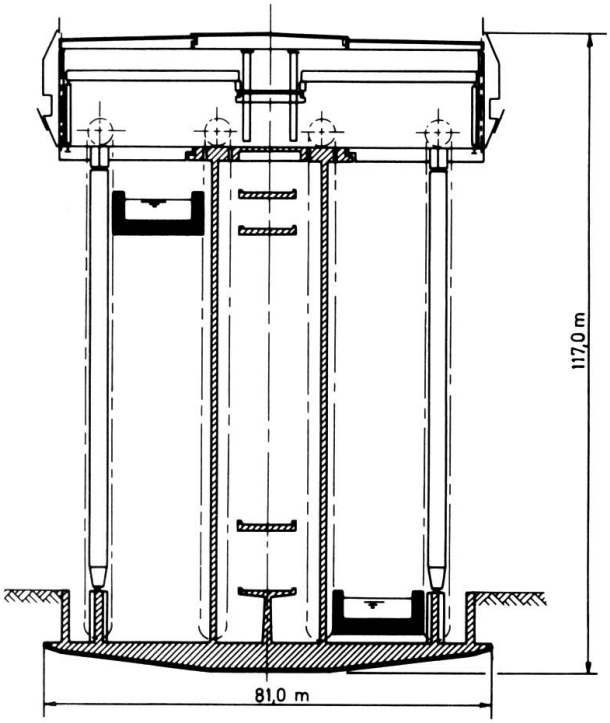

Fig. 2: Cross Section

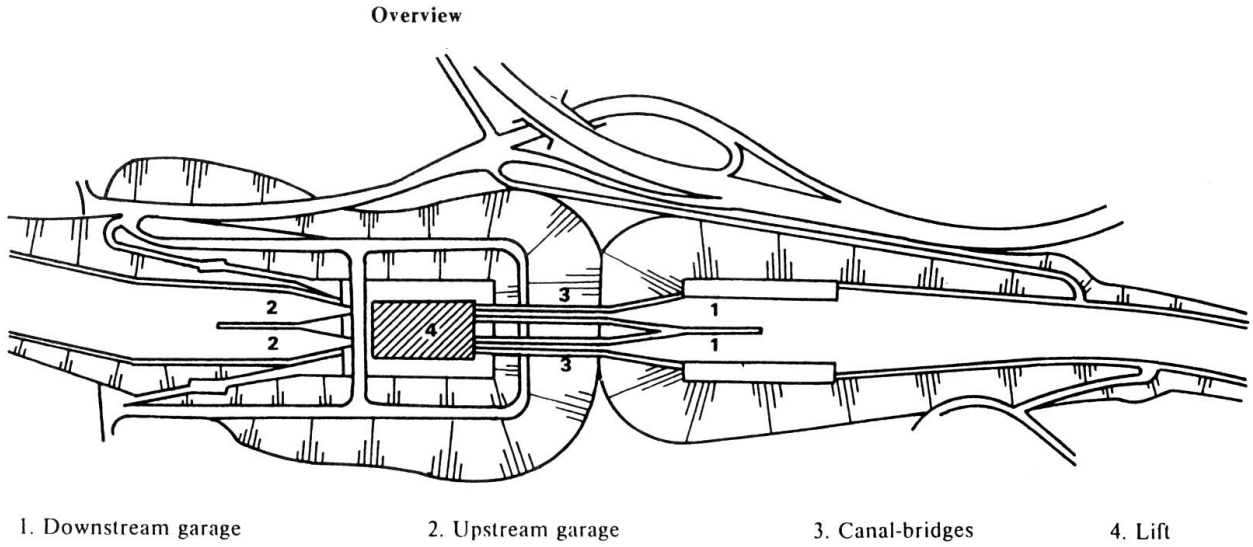

1. Downstream garage 2. Upstream garage 3. Canal-bridges 4. Lift

Fig. 1: Overview

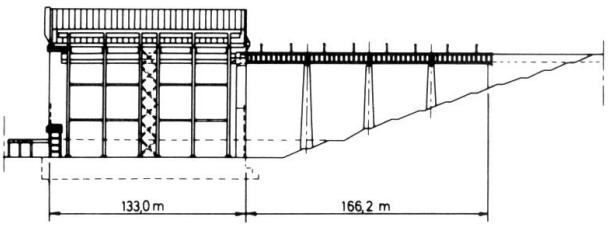

Fig. 3: Perspective view of the lift

The work includes:
- a monolithic watertight basin in reinforced concrete
- a central tower in reinforced concrete
- external steel columns
- on the upper part, a machine room supported by the central tower and the external columns.

Effective pressure transmitted into the ground and subpressures are limited to 1 to 3 kg/cm^2. The settlement of the earth has been estimated at 2 to 4 cm.

The central tower is embedded in the basin. It forms, together with the basin and the steel framework, a rigid ensemble which resists flexion and torsion and can absorb vertical and horizontal forces without appreciable displacement.

With a weight of about 200 000 t, this ensemble can resist subpressures and the bed remains in contact with the ground in the final situation and at all stages of construction.

Furthermore, to make the structure able to withstand settlement of the ground and deformations due to pressure and temperature changes, the degree of static redundancy was reduced considerably.

The floor and roof of the machine room have joints in three sections backed up by longitudinal joints. The metal columns are double-jointed and the gantries in the machine room are simply-supported.

The cages

The troughs are one of the main elements of the project. They are made of both hot rolled steel sections and welded plate steel sections.

Their characteristics are:
- useful length: 112 m
- useful width: 12 m
- total height: 8 m
- mass: 2200 t approximately.

Electromechanical equipment

The electromechanical equipment of a vertical lift is a very complex installation due to its size and the mass of objects to be moved.

It is easy to see that moving a cage with water weighing 8400 t could present some problems.

In order to reduce the force required, the mass is counter balanced.

Each trough is suspended on 83 mm diameter cables:
- 112 suspension cables
- 32 control cables.

The suspension cables are distributed in 8 groups of 14, each group being linked to a 800 t counterweight. Each suspension cable is attached directly to its counterweight, passes through a guide pulley, and is run toward the cage where it is linked by a tension jack and a lifting spindle.

(M. Remouchamps)

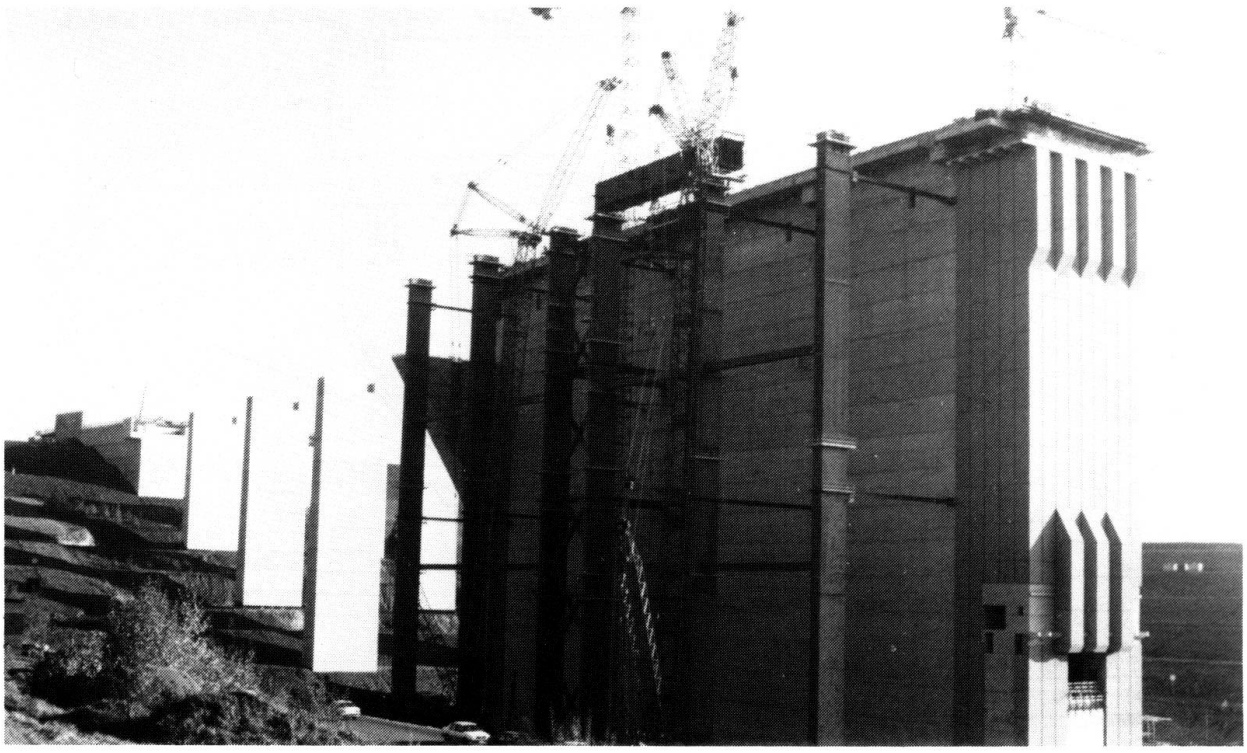

Fig. 4: General view during construction