Zeitschrift: IABSE publications = Mémoires AIPC = IVBH Abhandlungen

Band: 36 (1976)

Artikel: Ultimate strength and design of reinforced concrete beams under bending and shear

Autor: Grob, Josef / Thürlimann, Bruno

DOI: https://doi.org/10.5169/seals-926

Nutzungsbedingungen

Die ETH-Bibliothek ist die Anbieterin der digitalisierten Zeitschriften auf E-Periodica. Sie besitzt keine Urheberrechte an den Zeitschriften und ist nicht verantwortlich für deren Inhalte. Die Rechte liegen in der Regel bei den Herausgebern beziehungsweise den externen Rechteinhabern. Das Veröffentlichen von Bildern in Print- und Online-Publikationen sowie auf Social Media-Kanälen oder Webseiten ist nur mit vorheriger Genehmigung der Rechteinhaber erlaubt. Mehr erfahren

Conditions d'utilisation

L'ETH Library est le fournisseur des revues numérisées. Elle ne détient aucun droit d'auteur sur les revues et n'est pas responsable de leur contenu. En règle générale, les droits sont détenus par les éditeurs ou les détenteurs de droits externes. La reproduction d'images dans des publications imprimées ou en ligne ainsi que sur des canaux de médias sociaux ou des sites web n'est autorisée qu'avec l'accord préalable des détenteurs des droits. En savoir plus

Terms of use

The ETH Library is the provider of the digitised journals. It does not own any copyrights to the journals and is not responsible for their content. The rights usually lie with the publishers or the external rights holders. Publishing images in print and online publications, as well as on social media channels or websites, is only permitted with the prior consent of the rights holders. Find out more

Download PDF: 30.03.2026

ETH-Bibliothek Zürich, E-Periodica, https://www.e-periodica.ch

Ultimate Strength and Design of Reinforced Concrete Beams under Bending and Shear

Résistance et dimensionnement des poutres en béton armé soumises à la flexion et à l'effort tranchant

Bruchwiderstand und Bemessung von Stahlbetonbalken unter Biegung und Schub

JOSEF GROB
Dr. sc. techn.

BRUNO THÜRLIMANN
Professor Dr. sc. techn.

Institute of Structural Engineering, Swiss Federal Institute of Technology (ETH) Zurich (Switzerland)

1. Introduction

In the present paper the plastic resistance of underreinforced concrete beams under bending and shear is investigated using the theory of plasticity. A truss model with variable inclination of the concrete diagonals is applied. This model consists of the longitudinal reinforcing bars acting as stringers, the stirrups as vertical ties and the concrete diagonals as inclined struts forming a continuous compression field. The obtained solutions are special forms of the general yield criterion of underreinforced concrete walls with both the longitudinal and the stirrup reinforcement yielding. In this case a sufficient shear transfer within the cracks is assumed so that the concrete diagonals can reach their final inclination under ultimate loads. Due to the fact that the shear transfer within a crack decreases with increasing crack widths, additional considerations become necessary. Hence, limits of the inclination of the concrete diagonals are introduced.

Finally design equations for the dimensioning of reinforced and prestressed concrete beams under combined bending and shear are derived and compared with test results. The new Swiss Specifications based on these equations are discussed.

2. Shear Wall Element

The ultimate strength of many reinforced concrete structures, e.g. beams with solid, thin-walled open or closed cross sections, long cylindrical shells, depend on the carrying capacity of shear wall elements. For instance a beam with a thin-walled open cross section can be subdivided into a number of shear walls. To describe

their behavior a truss model is assumed with the longitudinal bars acting as stringers, the stirrups as vertical ties and the concrete diagonals as inclined compression struts.

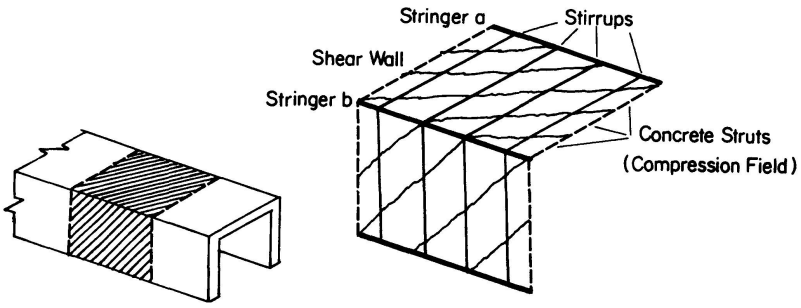

Fig. 1. Shear Walls of a Thin-Walled Reinforced Concrete Beam.

In order to simplify the mathematical treatment the longitudinal reinforcement is assumed to be concentrated into stringers located in the corners of the cross section.

2.1 Static Relations

The static relations for a discret model with a 45°-inclination of the concrete diagonals were derived by Ritter and Mörsch about 70 years ago. In the case of torsion and bending, LAMPERT and THÜRLIMANN [8] introduced the more realistic truss model with variable inclination of the diagonals. This model has recently been applied to other cases like bending and shear or warping torsion.

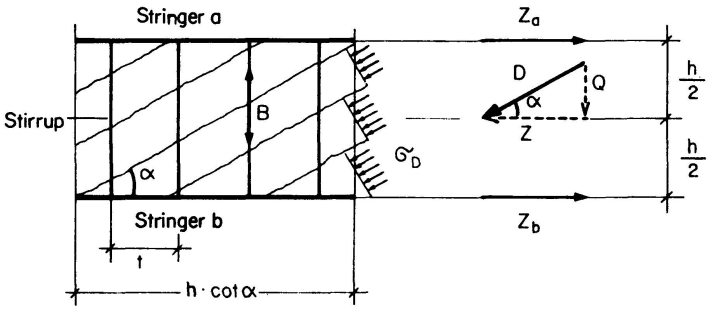

Fig. 2. Static Behavior of a Shear Wall Element.

The truss forces shown in Figure 2 are acting in the plane of the shear wall. The compression diagonals form a continuous compression field. The corresponding concrete stresses are assumed to be constant over the heigth of the shear wall element. Therefore these stresses furnish the resultant D acting at mid-heigth $\frac{h}{2}$. Its components Z and Q show that an applied shear force Q produces a normal force Z:

$$Z = Q \cdot \cot \alpha \tag{1}$$

Since the stirrups together with the stringers provide a continuous support for the diagonals, a constant distribution of stirrup forces is obtained in the shear

wall element. Because there are $\frac{h}{t} \cdot \cot \alpha$ stirrups per element the following relation exists between the shear force Q and the tensile force B of a stirrup:

$$Q = B \cdot \frac{h}{t} \cdot \cot \alpha \tag{2}$$

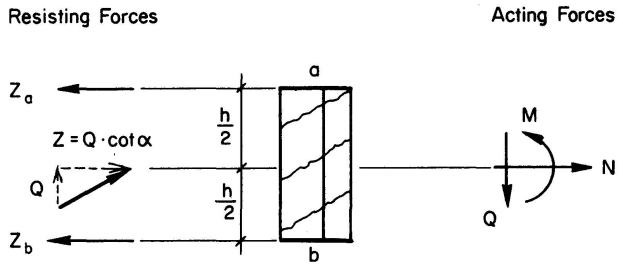

Fig. 3. Equilibrium in a Shear Wall.

If the shear wall element is subjected to a bending moment M, a normal force N and a shear force Q, the equilibrium conditions lead to the following stringer forces:

$$Z_a = -\frac{M}{h} + \frac{N}{2} + \frac{Q}{2} \cdot \cot \alpha \qquad Z_b = \frac{M}{h} + \frac{N}{2} + \frac{Q}{2} \cdot \cot \alpha \tag{3}$$

2.2 Plastic Resistance

The plastic resistance of an underreinforced shear wall under bending and shear, Figure 3, is investigated. The amount of reinforcement is such that the resistance is determined by yielding of the reinforcements and not by crushing of the concrete. The carrying capacity is then calculated using the lower bound or static theorem of the theory of plasticity.

The yield force of the stringers a and b is Z_f and that of one stirrup B_f, respectively.

The equilibrium conditions are obtained from Eqs. (2) and (3):

$$Q = B \cdot \frac{h}{t} \cdot \cot \alpha \qquad Z_a = -\frac{M}{h} + \frac{Q}{2} \cdot \cot \alpha \qquad Z_b = \frac{M}{h} + \frac{Q}{2} \cdot \cot \alpha$$

According to the lower bound theorem the highest values for M_p and Q_p (p = plastic) will lead to collapse provided equilibrium is fulfilled and the yield conditions are not violated. Here the maximum is reached if yielding of the stringer b and the stirrups occur. Thus the following equations are obtained:

$$Q_p = B_f \cdot \frac{h}{t} \cdot \cot \alpha \tag{4}$$

$$Z_f = \frac{M_p}{h} + \frac{Q_p}{2} \cdot \cot \alpha \tag{5}$$

Eq. (4) gives $\cot \alpha = \dfrac{Q_p}{B_f \cdot \frac{h}{t}}$

Substituting in Eq. (5) $Z_f = \dfrac{M_p}{h} + \dfrac{Q_p^2}{2 \cdot B_f \cdot \frac{h}{t}}$

It can be rewritten in the form of an interaction equation:

$$\frac{M_p}{M_{p0}} + \left(\frac{Q_p}{Q_{p0}}\right)^2 = 1 \tag{6}$$

with the reference values for the "Plastic Moment" M_{p0} and the "Plastic Shear Force" Q_{p0}:

$$M_{p0} = Z_f \cdot h \qquad \text{for } Q_p = 0$$

$$Q_{p0} = \sqrt{2 Z_f \cdot B_f \cdot \tfrac{h}{t}} \qquad \text{for } M_p = 0$$

Eq. (6) is plotted in Figure 4. However, as will be discussed in Section 2.3, its validity is limited by the following values for the angle α:

$$0.5 \leq |\tan \alpha| \leq 2.0 \tag{7}$$

Assuming the lower limit, $\tan \alpha = 0.5$, the highest shear capacity follows from Eq. (4):

$$Q_p = 2 B_f \cdot \frac{h}{t} \tag{8}$$

For the upper limit, $\tan \alpha = 2.0$, Eq. (5) gives

$$\frac{M_p}{M_{p0}} + \frac{1}{4} \cdot \frac{Q_p}{Z_f} = 1. \tag{9}$$

The derived Eqs. (6), (8) and (9) describe the bending-shear interaction diagram of Figure 4.

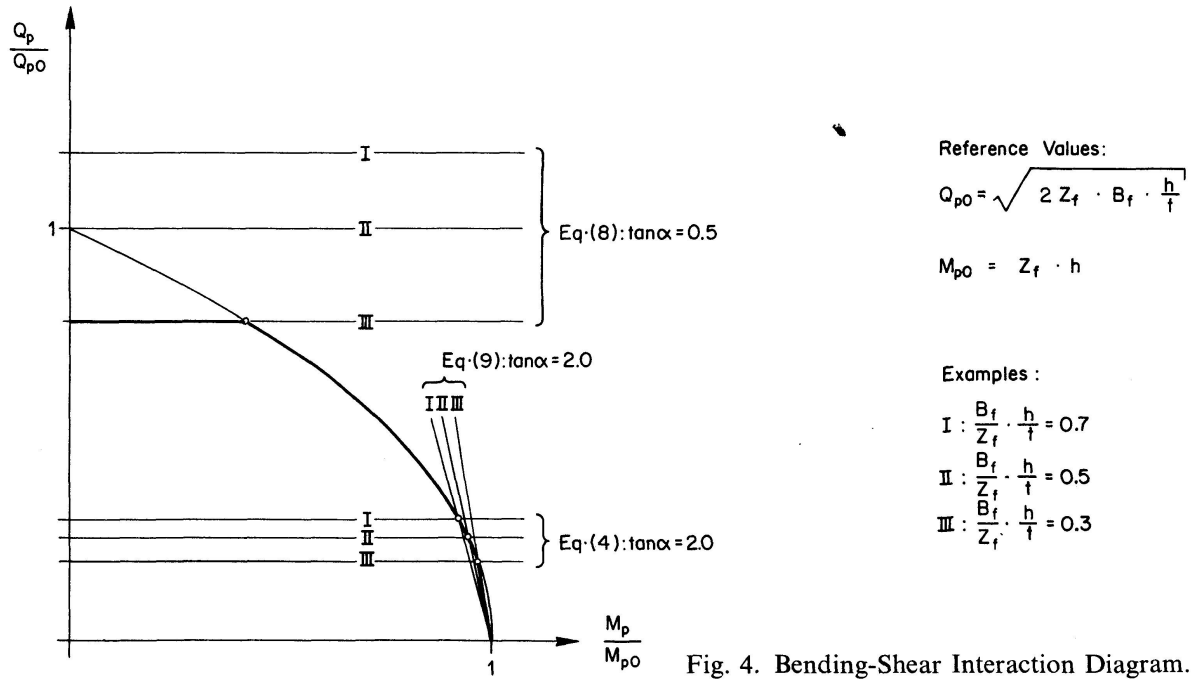

Fig. 4. Bending-Shear Interaction Diagram.

It can be seen from Figure 4 that the value Q_{p0} will not be reached if the ratio of stirrup to longitudinal reinforcement is small, i.e. $\frac{B_f}{Z_f} \cdot \frac{h}{t} < 0.5$. The interaction is then limited by Eq. (8). Vice versa Eq. (9) bounds the interaction for high values of the bending moment, but the numerical influence of this limitation is negligible.

Using the upper bound or kinematic theorem of the theory of plasticity the equivalent kinematic solution has been derived in Ref. [5]. Since this solution agrees with the presented static solution, the following different mechanisms based on the interaction diagram can be distinguished.

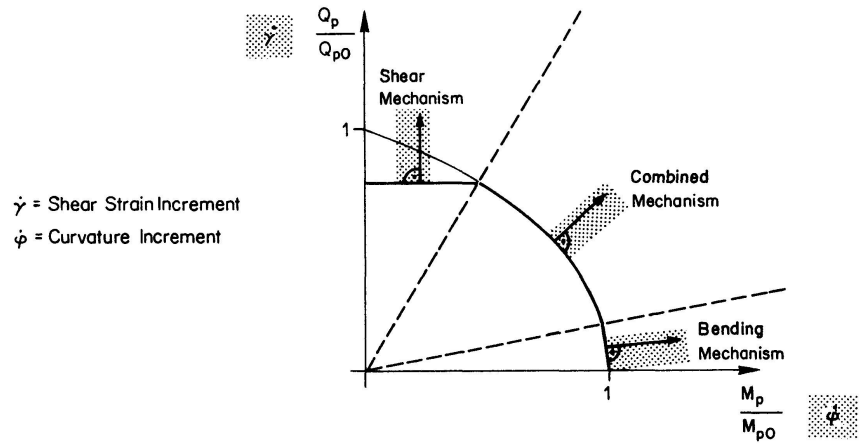

Fig. 5. Yield Surface and Mechanisms.

A combined mechanism occurs when both the longitudinal and stirrup reinforcement yield (Eq. (6)). A bending mechanism or a shear mechanism is obtained for yielding of the longitudinal ($\tan \alpha > 2.0$) or stirrup reinforcement ($\tan \alpha < 0.5$), respectively. Of course the bounds $\tan \alpha = 0.5$ or 2.0 should not be considered as fixed values. They indicate the transitions between the three different mechanisms.

2.3 Kinematic Considerations

In this paper the kinematic relations are discussed only to the extent necessary to explain the limitations on the inclination of the concrete compression field. Further details are given in Ref. [5]. Since only underreinforced members are considered, the concrete is assumed to be rigid. Hence, all deformations are caused by elongations of the reinforcements.

Due to aggregate interlock the direction of the crack opening is first assumed to be normal to the crack direction. Hence, the following state of motion in a shear wall element is obtained for a constant displacement field, ε_R being a convenient displacement parameter, i.e. the mean crack width divided by the mean crack distance.

The strains are directly obtained from the displacement diagram in Figure 6. The shearing strain γ describing the distortion of the rectangular element is composed of the elongations in the longitudinal and transverse reinforcement:

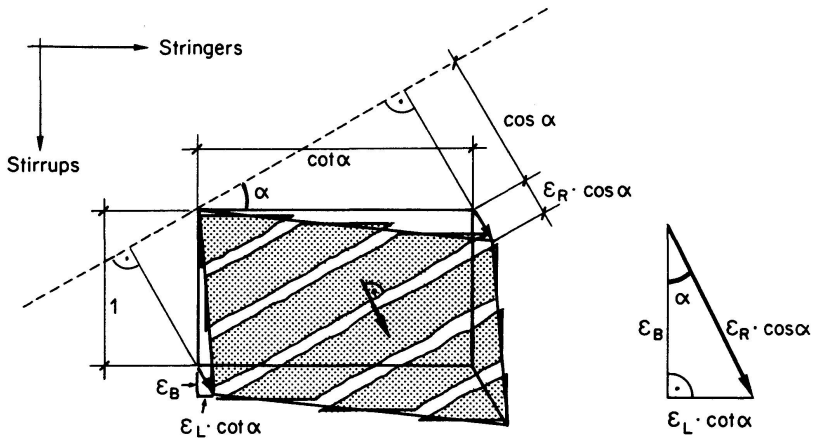

Fig. 6. Displacement Diagram for a Shear Wall Element.

$$\gamma = \varepsilon_L \cdot \cot \alpha + \varepsilon_B \cdot \tan \alpha \tag{10}$$

The elongations ε_L and ε_B are interconnected by

$$\varepsilon_B = \varepsilon_L \cdot \cot^2 \alpha, \tag{11}$$

valid for an orthogonal crack opening. The displacement parameter ε_R is related to the elongations of the reinforcement as follows

$$\text{With: } \varepsilon_R \cdot \sin^2 \alpha = \varepsilon_L \qquad \varepsilon_R \cdot \cos^2 \alpha = \varepsilon_B \qquad \rightarrow \varepsilon_R = \varepsilon_L + \varepsilon_B \tag{12}$$

However, the orthogonal crack opening as well as the inclination α of the compression field are subjected to certain limits. Responsible for these limits are the deformations, especially the crack widths necessary to reach ultimate resistance, i.e. yielding of both the longitudinal and stirrup reinforcement. To obtain an estimate of the ratios between the crack opening and the yield strains of the longitudinal and transverse reinforcement, respectively the relations (11) and (12) are taken. The parameter ε_R, significant for the crack widths, reaches the following values:

At yielding of longitudinal reinforcement: $\varepsilon_R = \varepsilon_f \cdot (1 + \cot^2 \alpha)$
At yielding of stirrup reinforcement: $\varepsilon_R = \varepsilon_f \cdot (1 + \tan^2 \alpha)$.

Thus the displacement parameter ε_R and hence the crack widths at the onset of yielding is a function of the angle α. Figure 7 shows that the parameter ε_R is a minimum for $\alpha = 45°$ and increases to infinity for $\alpha = 0°$ or $\alpha = 90°$.

A redistribution of the internal forces from the cracking to ultimate load, due to changing of the angle α, is only possible if a sufficient shear transfer by aggregate interlock in the previously formed cracks occurs. If the cracks start to open at an accelerated rate (see Fig. 7) the shear transfer deteriorates rapidly and no further redistribution becomes possible.

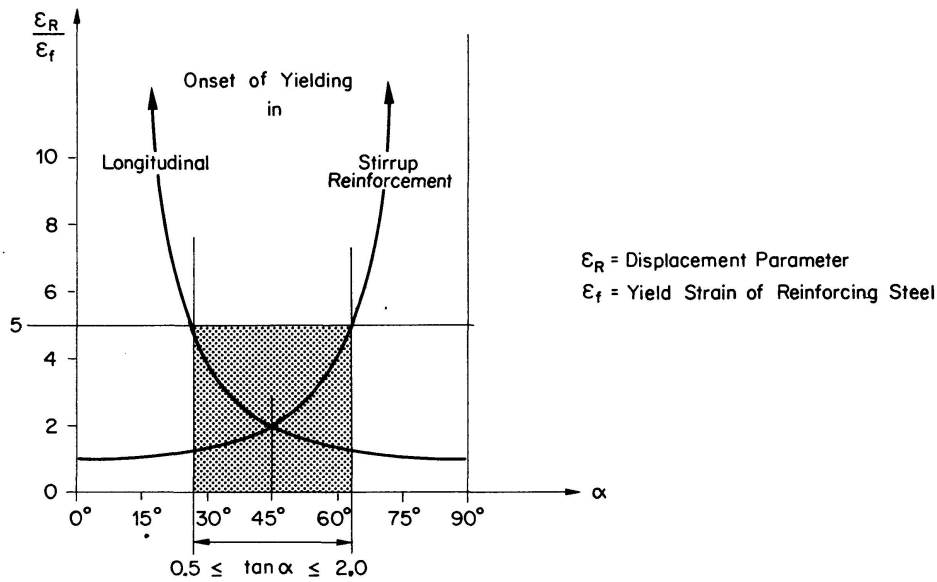

Fig. 7. Displacement Parameter ε_R at Onset of Yielding.

From tests (6) the previously mentioned bounds have been chosen:

$$0.5 \leq \tan \alpha \leq 2.0$$

Eq. (11) expressing orthogonal crack opening is only applicable within these limits.

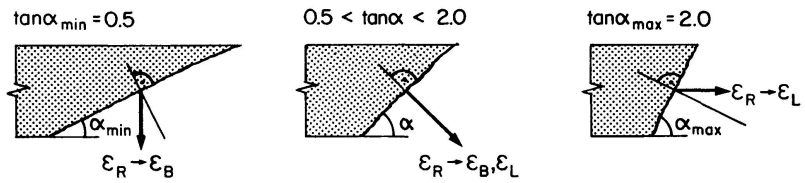

Fig. 8. Limit Inclinations of Concrete Diagonals.

In the range $0.5 < \tan \alpha < 2.0$ the strains of the longitudinal and transverse reinforcement are connected as shown in Figure 8. In this case the longitudinal *and* transverse reinforcement of a shear wall have to yield in order to form a collapse mechanism. Beyond the limits $\tan \alpha = 0.5$ or 2.0 yielding of the transverse *or* longitudinal reinforcement alone produces a mechanism.

The above results can also be obtained from a physical model using a saw-toothed crack as shown in Figure 9.

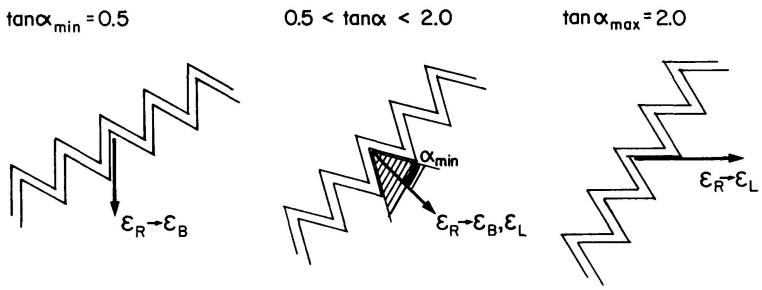

Fig. 9. Limit Inclinations of Concrete Diagonals.

In [2] BRAESTRUP defined his limit of the inclination α as a function of the concrete compression strength and the yield force of the reinforcement only. Based on test results (e.g. [3]) it can be stated that in the case where the reinforcement in one direction does not yield Braestrup's theory leads often to higher ultimate loads than observed.

2.4 Concrete Stresses

So far only underreinforced shear walls have been considered where the reinforcement yields prior to failure of the concrete. Concrete failure can be caused by crushing of the bending compression zone or of the concrete compression diagonals. These kinds of failure should be avoided and therefore the concrete stresses must be checked.

The stresses in the bending compression zone can be determined by using the well-known bending theory. The case is treated in more details in [8] for combined torsion and bending.

The stresses σ_D in the compression field are caused by the diagonal force D, Figure 10.

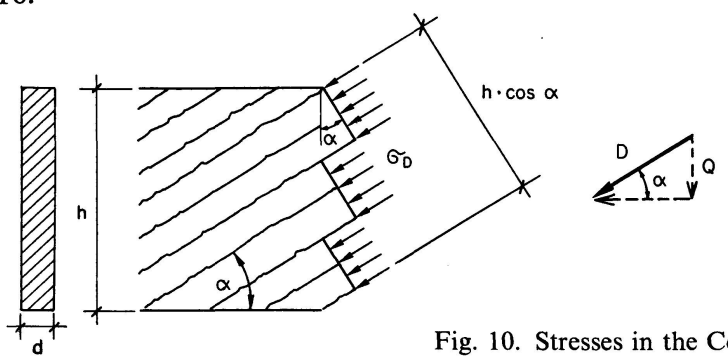

Fig. 10. Stresses in the Compression Diagonals.

$$\sigma_D = \frac{D}{d \cdot h \cdot \cos\alpha} = \frac{Q}{d \cdot h \cdot \sin\alpha \cdot \cos\alpha} \tag{13}$$

Introducing the nominal shear stress $\tau = \dfrac{Q}{d \cdot h}$, (14)

the following expression is obtained: $\dfrac{\sigma_D}{\tau} = \dfrac{1}{\sin\alpha \cdot \cos\alpha}$ (15)

This term is plotted in Figure 11 as a function of the angle α.

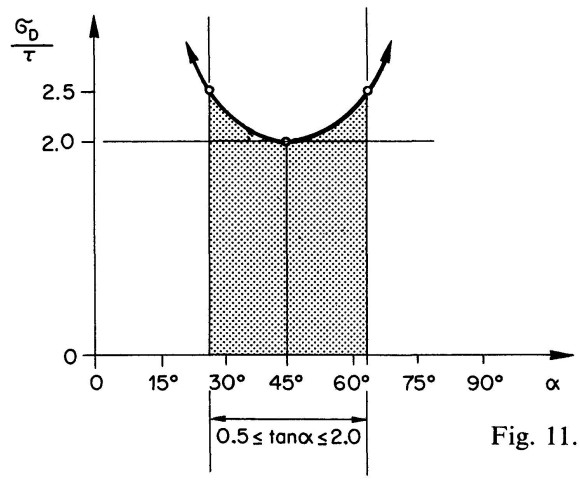

Fig. 11. Stress σ_D as Function of Angle α.

It is interesting to note that the compression stress σ_D does not vary significantly within the given bounds of the angle α. The maximum deviation from the minimum value at 45° is only 25%. Thus the average web stress σ_D can be controlled by limiting the nominal shear stress τ independently of the inclination α of the compression diagonals.

3. Design of Reinforced Concrete Beams

To describe the behavior of shear wall elements a truss model was assumed in Section 2. The development of such a regular truss action in beams is disturbed by discontinuities caused by concentrated forces. Their influence is shown in Figure 12. A statically admissible stress field is found by introducing fan-shaped stress distributions which are in equilibrium with the concentrated forces [12].

The forces acting in the stirrups are the same in the fan as well as in the regular truss, whereas the stringer forces Z_a and Z_b are influenced by the fans. This effect is shown in Figure 12.

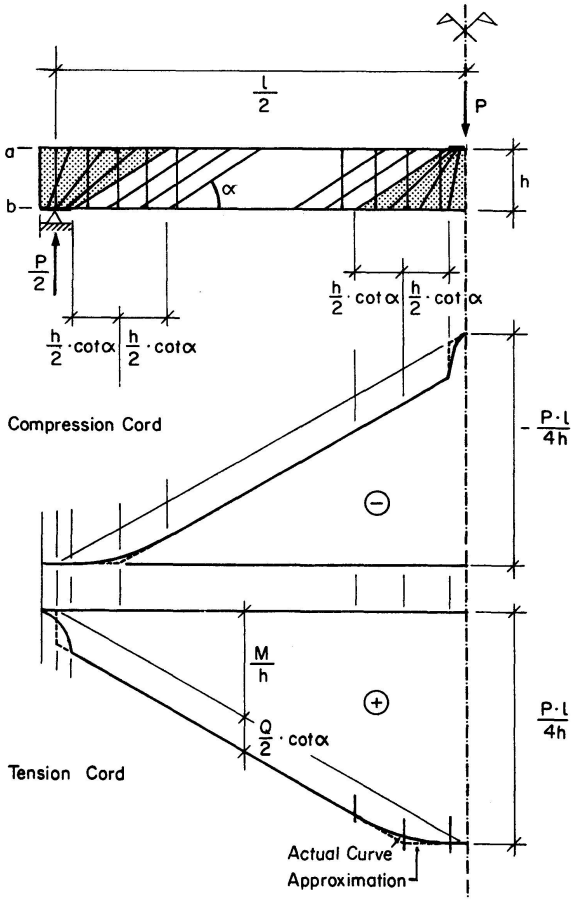

Fig. 12. Longitudinal Forces in Beam.

The actual curves for the stringer forces are sufficiently approximated by the dotted straight lines. Hence, the calculation of the reinforcement should be made at a distance $\frac{h}{2} \cdot \cot \alpha$ from the concentrated loads.

The following design provisions based on the described truss model have been introduced into the Swiss Specifications [11]. The longitudinal reinforcement $F_L(M)$ due to bending is calculated and the stresses in the bending compression zone are checked by using the simple bending theory:

$$F_L(M) \cdot \sigma_{fL} = \frac{M}{y} \tag{16}$$

with: y = distance between bending and compression resultant.

To simplify the procedure of calculating the shear reinforcement, the distance h_o between the longitudinal reinforcing bars enclosed by the stirrups is used. Eq. (2) determines the cross sectional area of the stirrups due to shear:

$$F_B(Q) \cdot \sigma_{fB} = Q \cdot \frac{t}{h_o} \cdot \tan \alpha \tag{17}$$

The additional longitudinal reinforcement due to shear is obtained from Eq. (3).

$$F_L(Q) \cdot \sigma_{fL} = \frac{1}{2} \cdot Q \cdot \cot \alpha \tag{18}$$

The inclination α of the concrete diagonals is restrained within the bounds

$$\frac{3}{5} \leq |\tan \alpha| \leq \frac{5}{3} \tag{19}$$

For design closer limits are prescribed than given by Eq. (7). The evaluation of cracking of test beams ([3], [4] and [9]), showed an adequate behavior under service loads if the limiting values (Eq. (19)) are used. Figure 13 shows the observed maximum shear crack widths r_{max} under service load taken as the theoretical ultimate load divided by a global safety factor of 1.8.

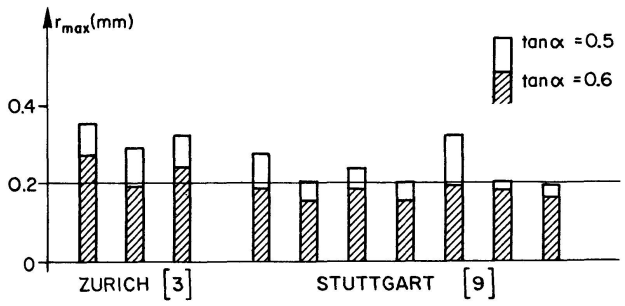

Fig. 13. Maximum Shear Crack Widths of Beams under Service Load.

Next the cost of the longitudinal and stirrup reinforcement as a function of the inclination of the concrete diagonals is investigated. The sum of the yield forces (Eqs. (16), (17) and (18)) of the longitudinal and stirrup reinforcement per unit beam length can be taken as a measure of the steel volume:

$$\overline{C} = \frac{M}{y} + Q \cdot \left(\frac{1}{2} \cdot \cot \alpha + \tan \alpha \right) \tag{20}$$

Introducing the ratio ρ between the costs of the stirrup and longitudinal reinforcement the following relative price index is obtained:

$$C = \frac{M}{y} + Q \cdot \left(\frac{1}{2} \cdot \cot \alpha + \rho \cdot \tan \alpha \right) \tag{21}$$

with: $\rho = \dfrac{\text{unit price of stirrup reinforcement}}{\text{unit price of longitudinal reinforcement}}$

The function $c(\alpha)$ determines the most favorable value for the angle α

$$c(\alpha) = \frac{1}{2} \cdot \cot \alpha + \rho \cdot \tan \alpha \tag{22}$$

This function is plotted in Figure 14 within the prescribed range of the inclination α of the diagonals.

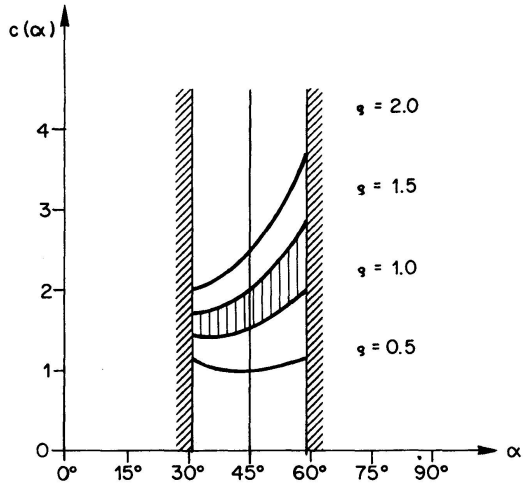

Fig. 14. Relative Cost Function of Reinforcement.

The practical value for ρ lies somewhere between $1.0 < \rho < 1.5$. Hence, the selection of an angle α approaching 30° gives the most economical solution.

The nominal shear stress τ is a measure of the concrete stress in the web:

$$\tau = \frac{Q}{d_o \cdot h_o} \tag{23}$$

with: d_o = minimum web thickness;
h_o = distance of the longitudinal reinforcing bars enclosed by the stirrups.

No shear cracks occur below the value τ_r. Therefore the shear is carried by the concrete alone and no or only a nominal shear reinforcement is required.

$$\tau \leq \tau_r \tag{24}$$

The values of τ_r given in the current Swiss Code [10] and in the new Swiss Specifications [11] depend on the concrete strength β_w (cube strength).

Cube Strength β_w (kg/cm^2):	200	300	400	≥ 500	
Approx. Cylinder Strength β_c:	150	225	300	≥ 375	(25)
Design Shear Stress τ_r:	8	10	12	14	

On the other side the nominal shear stress τ should not exceed the maximum value τ_{max} which depends on the concrete strength and the maximum stirrup spacing t.

$$\tau \leq \tau_{max} \tag{26}$$

$$\begin{aligned} &\text{Normal Spacing: } \tau_{max} = 5\tau_r \text{ for } t \leq \frac{h_o}{2}, \text{ but } t \leq 30 \text{ cm} \\ &\text{Close Spacing: } \quad \tau_{max} = 6\tau_r \text{ for } t \leq \frac{h_o}{3}, \text{ but } t \leq 20 \text{ cm} \end{aligned} \tag{27}$$

Between the uncracked state, $\tau \leq \tau_r$, and the fully developed truss action, about $\tau \geq 3\tau_r$, a transition takes place. Observations on test beams show that the initial shear strength of the uncracked beam is reduced progressively with the development of inclined cracks. The contribution of the concrete to the shear strength is certainly caused by its tensile strength. For design purposes the following approximation is used:

$$\begin{aligned} &\text{For } \tau_r < \tau < 3\tau_r: \quad Q_c = \tfrac{1}{2} \cdot (3\tau_r - \tau) \cdot d_o \cdot h_o \\ &\text{For } \tau \geq 3\tau_r: \quad Q_c = 0 \end{aligned} \tag{28}$$

This additional contribution is taken into account only for the design of the stirrup reinforcement by deducting Q_c from the applied shear force Q. Thus the final design equations follow from Eqs. (17), (18) and (28):

Stirrup Reinforcement:

$$F_B(Q) \cdot \sigma_{fB} = (Q - Q_c) \cdot \frac{t}{h_o} \cdot \tan\alpha, \text{ but} \geq \tfrac{1}{2} \cdot \tau_r \cdot t \cdot d_o \text{ (min. stirrup reinforcement).} \tag{29}$$

Longitudinal reinforcement due so Shear:

$$F_L(Q) \cdot \sigma_{fL} = \tfrac{1}{2} \cdot Q \cdot \cot\alpha \tag{30}$$

These relations can be put in a non-dimensional form.

$$\text{For } \tau_r < \tau < 3\tau_r: \quad \frac{F_B(Q) \cdot \sigma_{fB}}{\tau_r \cdot t \cdot d_o} = \frac{3}{2} \cdot \left(\frac{\tau}{\tau_r} - 1\right) \cdot \tan\alpha \geq \frac{1}{2}$$

$$\frac{F_L(Q) \cdot \sigma_{fL}}{\tau_r \cdot d_o \cdot h_o} = \frac{\tau}{\tau_r} \cdot \frac{\cot\alpha}{2}$$

$$\text{For } \tau \geq 3\tau_r: \quad \frac{F_B(Q) \cdot \sigma_{fB}}{\tau_r \cdot t \cdot d_o} = \frac{\tau}{\tau_r} \cdot \tan\alpha$$

$$\frac{F_L(Q) \cdot \sigma_{fL}}{\tau_r \cdot d_o \cdot h_o} = \frac{\tau}{\tau_r} \cdot \frac{\cot\alpha}{2}$$

In Figure 15 design diagrams based on the above expressions are given for the practical range of the inclination of the concrete diagonals, e.g. from about 30° to 45°. The current Code RL 17 of the Swiss Specifications SIA-162 lies between these two limits of $\tan\alpha = 0.6$ and $\tan\alpha = 1.0$. It is based on a 45°-truss model with a constant deduction Q_c ([1], [10]). The new Code [11] uses the here described truss model with a variable inclination of the concrete diagonals. As shown in Figure 15 smaller inclinations lead to a reduction of the stirrup reinforcement but to an increase of the longitudinal reinforcement. Test results of beams which reached limit inclinations due to a weak stirrup reinforcement are also plotted in Figure 15. The observed ultimate loads exceeded the calculated theoretical strengths assuming $\tan\alpha = 0.6$. Even with $\tan\alpha = 0.5$, save values would be obtained. However as previously stated the higher value $\tan\alpha = 0.6$ assures adequate cracking performance under working loads.

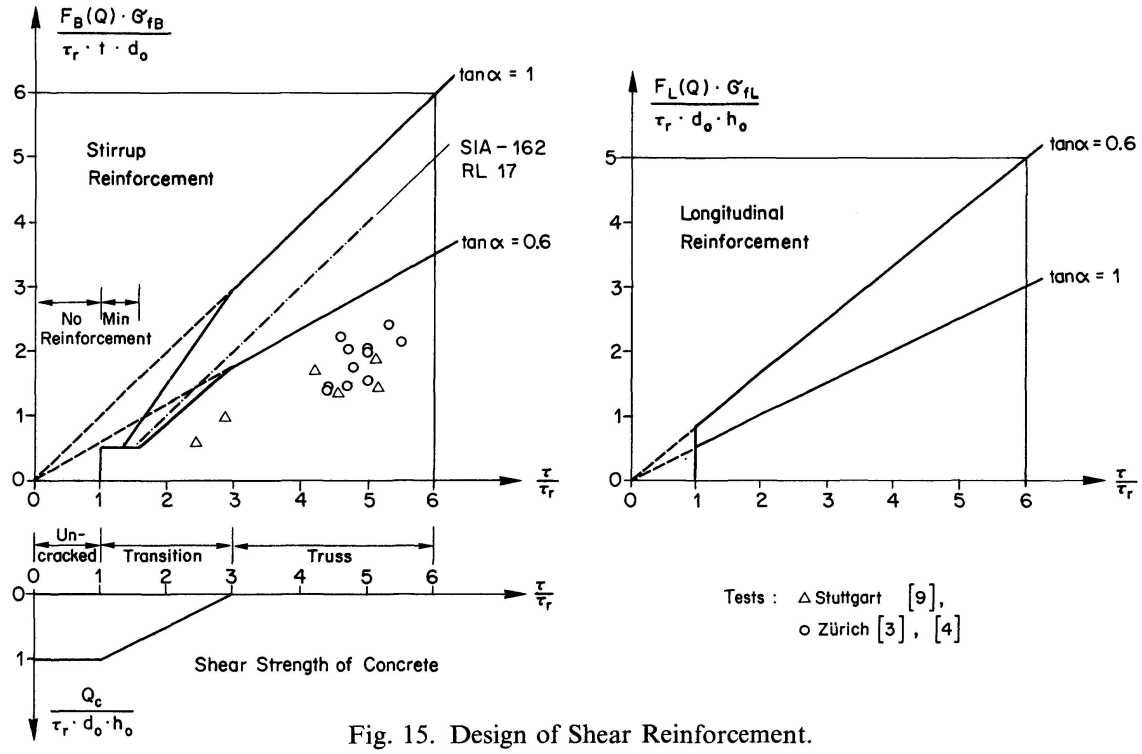

Fig. 15. Design of Shear Reinforcement.

So far the influences of a variable depth of the beam and of inclined prestressing tendons have not been considered. They can be taken into account by substituting the applied shear force Q by the effective web shear force Q_{eff}:

$$Q_{eff} = Q - \frac{M}{y}\cdot 2\tan\frac{\delta}{2} - V\cdot\sin\beta \tag{31}$$

The sign convention for the forces and the angles are indicated in Figure 16.

Inclined tendons produce a vertical component corresponding with the deduction $V\cdot\sin\beta$ in Eq. (31). In order to simplify the design procedure the force V in the tendon is taken equal to the prestressing force of the tendon. Hence, no possible allowance for an increase of this force at ultimate load is made. Prestressing influences also the cracking behavior by retarding the onset of cracking in the

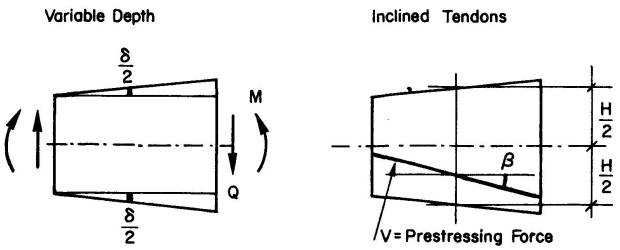

Fig. 16. Variable Depth and Inclined Tendons.

web. Thus, the contribution Q_c to the shear strength decreases under higher nominal shear stresses in comparison with ordinary reinforced beams. Practical considerations show that this influence can be neglected without economical consequences except in cases where no bending cracks occur even at ultimate load (e.g. in support zones of precast pretensioned beams). If the maximum concrete tensile stresses due to bending do not exceed the value $2\tau_r$ the new Code [11] allows a higher deduction Q_c than given in Eq. (28). This deduction can then be used in Eq. (29) for the design of the stirrup reinforcement.

$$\begin{aligned} &\text{for } \kappa \cdot \tau_r < \tau < (2+\kappa) \cdot \tau_r: \quad Q_c = \tfrac{\kappa}{2} \cdot [(2+\kappa) \cdot \tau_r - \tau] \cdot d_o \cdot h_o \\ &\text{for } \tau \geq (2+\kappa) \cdot \tau_r: \quad Q_c = 0 \end{aligned} \tag{32}$$

V = prestressing force;
F_b = area of concrete.

$$\kappa = \sqrt{1 + \frac{V}{F_b \cdot \tau_r}}$$

Acknowledgement

The study has been part of a research program at the Institute of Structural Engineering, Swiss Federal Institute of Technology, Zurich, financially supported by the Foundation for Scientific Research of the Society of Swiss Cement Manufacturers. The authors would like to express their sincere appreciation for this support.

Notation

B	force in a stirrup.
B_f	yield force of a stirrup.
D	resultant force in the concrete compression diagonals.
F_b	area of concrete.
$F_B(Q)$	area of a stirrup due to shear.
$F_L(M)$	area of the longitudinal reinforcement due to bending
$F_L(Q)$	area of the longitudinal reinforcement due to shear.
M	bending moment.
M_p	plastic (ultimate) bending moment.
M_{po}	ultimate bending moment for pure bending.
N	normal force.
h	distance between top and bottom longitudinal stringer.
h_o	distance between the longitudinal reinforcement enclosed by the stirrups.
r_{max}	maximum shear crack width under service load.
t	stirrup spacing.
y	distance between compression and tension resultant in bending.
α	inclination of concrete diagonals.
β	inclination of prestressing tendons.
β_w, β_c	cube, cylinder strength of concrete.
γ	shear strain.
δ	angle of cross sectional depth changing.
ε	normal strain.

Q shear force.
Q_c contribution of the concrete tensile strength to the shear capacity.
Q_{eff} effective shear force in web.
Q_p plastic (ultimate) shear force
Q_{p0} ultimate shear force for pure shear.
V prestressing force.
Z longitudinal force due to shear.
Z_a, Z_b force in top respectively bottom stringer.
Z_f yield force of stringer.
$c(\alpha)$ parameter for relative reinforcement costs.
d wall thickness.
d_o minimum wall thickness.
ε_B stirrup strain.
ε_L stringer strain.
ε_R displacement parameter of shear wall.
ε_f yield strain of reinforcing steel.
κ ratio, Eq. (32).
ρ ratio between the costs of stirrup and longitudinal reinforcement.
σ_D stress in concrete diagonals.
σ_{fB} yield stress of stirrup reinforcement.
σ_{fL} yield stress of longitudinal reinforcement.
τ nominal shear stress.
τ_r design shear stress, Eq. (25).
τ_{max} maximum shear stress, Eq. (27).

References

1. BACHMANN, H., THÜRLIMANN B.: Schubbemessung von Balken und Platten aus Stahlbeton, Stahlbeton mit Spannzulagen und Spannbeton. (Sonderdruck aus Schweiz. Bauzeitung, 84. Jahrgang, Hefte 33 und 34.) Bericht Nr. 8 Institut für Baustatik und Konstruktion ETHZ, 1966, Vergriffen.
2. BRAESTRUP, W.M.: Plastic Analysis of Shear in Reinforced Concrete. Technical University of Denmark, Structural Research Laboratory, Magazine of Concrete Research, Vol. 26, No. 89, 1974.
3. CAFLISCH, R., THÜRLIMANN, B.: Schubversuche an teilweise vorgespannten Betonbalken, Versuchsberich Nr. 6504-2, Institut für Baustatik ETHZ, Birkhäuser Verlag Basel und Stuttgart, 1970.
4. CAFLISCH, R., KRAUSS, R., THÜRLIMANN, B.: Biege- und Schubversuche an teilweise vorgespannten Betonbalken. Serie C, Versuchsberich Nr. 6504-3, Institut für Baustatik ETHZ, Birkhäuser Verlag Basel und Stuttgart, 1971.
5. GROB, J.: Traglast von Stäben mit dünnwandigen offenen Querschnitten. Bericht Nr. 56, Institut für Baustatik und Konstruktion ETHZ, Birkhäuser Verlag Basel und Stuttgart, 1975.
6. LAMPERT P.: Bruchwiderstand von Stahlbetonbalken unter Torsion und Biegung, Bericht Nr. 26, Institut für Baustatik ETHZ, Birkhäuser Verlag Basel und Stuttgart, 1970.
7. LAMPERT, P.: Torsion und Biegung von Stahlbetonbalken. (Sonderdruck aus Schweiz. Bauzeitung, 88. Jahrgang, Heft 5.) Bericht Nr. 27, Institut für Baustatik ETHZ, Birkhäuser Verlag Basel und Stuttgart, 1970.
8. LAMPERT, P., THÜRLIMANN, B.: Ultimate Strength and Design of Reinforced Concrete Beams in Torsion and Bending. (Sonderdruck aus Band 31/I der IVBH-Abhandlungen der Internationalen Vereinigung für Brücken- und Hochbau, Zürich, 1972.) Bericht Nr. 42, Institut für Baustatik ETHZ, Birkhäuser Verlag Basel und Stuttgart, 1972.
9. LEONHARDT, F., WALTHER, R.: Schubversuche an einfeldrigen Stahlbetonbalken mit und ohne Schubbewehrung. Deutscher Ausschuss für Stahlbeton, Heft 151, Verlag Wilhelm Ernst und Sohn Berlin, 1962.
10. SIA-Norm 162, Norm für die Berechnung, Konstruktion und Ausführung von Bauwerken aus Beton, Stahlbeton und Spannbeton, Schweiz. Ingenieur- und Architekten-Verein, Zürich, 1968.
11. Richtlinie 34 zu SIA-Norm 162, Bruchwiderstand und Bemessung von Stahlbeton- und Spannbetontragwerken, Schweiz. Ingenieur- und Architekten-Verein, Zürich, 1976.
12. THÜRLIMANN, B., GROB, J., LÜCHINGER, P.: Torsion, Biegung und Schub in Stahlbetonträgern, Institut für Baustatik und Konstruktion ETHZ, 1975. Autographie zu Fortbildungskurs für Ingenieure aus der Praxis.

Summary

A theoretical analysis of the strength of reinforced concrete beams subjected to combined bending and shear has been presented on the basis of a truss model with variable inclination of the concrete diagonals forming a continuous com-

pression field. The analysis of the carrying capacity is based on the theory of plasticity. In order to insure the formation of a mechanism by yielding of the reinforcing steel, both the concrete stresses in the bending compression zone and in the inclined compression field have to be limited. Based on the analysis presented in this paper new Swiss Specifications have been prepared and introduced for the design of reinforced and prestressed concrete beams under bending and shear.

Résumé

La résistance à la rupture des poutres en béton armé soumises à la flexion et à l'effort tranchant a été analysée sur la base d'un modèle de treillis avec inclinaison variable des bielles. La déduction de la charge de rupture s'appuie sur la théorie de la plasticité. Pour avoir la certitude de la formation d'un mécanisme par écoulement des armatures, il est nécessaire de contrôler les contraintes dans le béton de la zone de compression et des bielles comprimées. La théorie exposée a servi de base à des recommandations suisses qui ont été développées et introduites pour le dimensionnement pratique des poutres en béton armé et précontraint soumises à la flexion et à l'effort tranchant.

Zusammenfassung

Der Bruchwiderstand von Stahlbetonbalken unter Biegung und Schub wurde aufgrund eines Fachwerkmodelles mit variabler Neigung der Druckdiagonalen untersucht. Die Herleitung der Bruchlast erfolgt nach der Plastizitätstheorie. Um die Ausbildung eines Mechanismus durch Fliessen der Armierung zu gewährleisten, müssen die Betonspannungen sowohl in der Biegedruckzone als auch in den Druckdiagonalen kontrolliert werden. Aufgrund der beschriebenen Theorie wurden neue schweizerische Richtlinien ausgearbeitet und für die Bemessung von biege- und schubbeanspruchten Stahlbeton- und Spannbetonbalken eingeführt.