Zeitschrift: IABSE publications = Mémoires AIPC = IVBH Abhandlungen
Band: 33 (1973)

Artikel: Finite element analysis of cable-stayed brides
Autor: Kajita, T. / Cheung, Y.K.
DOI: https://doi.org/10.5169/seals-25634

Nutzungsbedingungen
Die ETH-Bibliothek ist die Anbieterin der digitalisierten Zeitschriften auf E-Periodica. Sie besitzt keine Urheberrechte an den Zeitschriften und ist nicht verantwortlich für deren Inhalte. Die Rechte liegen in der Regel bei den Herausgebern beziehungsweise den externen Rechteinhabern. Das Veröffentlichen von Bildern in Print- und Online-Publikationen sowie auf Social Media-Kanälen oder Webseiten ist nur mit vorheriger Genehmigung der Rechteinhaber erlaubt. Mehr erfahren

Conditions d'utilisation
L'ETH Library est le fournisseur des revues numérisées. Elle ne détient aucun droit d'auteur sur les revues et n'est pas responsable de leur contenu. En règle générale, les droits sont détenus par les éditeurs ou les détenteurs de droits externes. La reproduction d'images dans des publications imprimées ou en ligne ainsi que sur des canaux de médias sociaux ou des sites web n'est autorisée qu'avec l'accord préalable des détenteurs des droits. En savoir plus

Terms of use
The ETH Library is the provider of the digitised journals. It does not own any copyrights to the journals and is not responsible for their content. The rights usually lie with the publishers or the external rights holders. Publishing images in print and online publications, as well as on social media channels or websites, is only permitted with the prior consent of the rights holders. Find out more

Download PDF: 08.01.2026

ETH-Bibliothek Zürich, E-Periodica, https://www.e-periodica.ch

Finite Element Analysis of Cable-Stayed Bridges

Analyse par éléments finis de ponts à câbles

Berechnung von Schrägkabelbrücken mit Hilfe finiter Elemente

T. KAJITA
Ph.D., Post-doctoral Fellow, Department of Civil Engineering, The University of Calgary, Calgary, Alberta, Canada

Y. K. CHEUNG
D.Sc. MICE, MI Struct. E., Professor of Civil Engineering, The University of Calgary, Calgary, Alberta, Canada

Introduction

In recent years, many bridges of the cable-stayed type [1] have been used for medium to long spans, and although the concept itself is not new, rapid growth in popularity has only been possible because of the development of orthotropic bridge decks, improved cable structures, the wide-spread use of the electronic computer, etc. In a review paper by LEONHARDT [2] it has been shown that cable-stayed bridges are clearly superior to suspension bridges for all spans above 200 metres.

A number of techniques can be used for the analysis of cable-stayed bridges. The transfer matrix method which was developed in Germany [3] is quite popular and has been recently applied to the non-linear analysis of cable-stayed girder bridges by TANG [4]. A mixed force-displacement method was developed by STAFFORD SMITH [5] while TROITSKY and LAZAR [6] used a flexibility approach to obtain analytical data for comparison with experimental results.

Most papers published on the static behaviour of cable-stayed bridges related only to the simplified problem of a two-dimensional frame structure. One exception is found in a paper by STAFFORD SMITH [7], who extended the technique given in reference [5] to the analysis of double-plane cable-stayed girder bridges and treated the deck as a plate.

In the present paper, cable-stayed bridges are solved by the finite element method, in which the bridge deck is divided into a number of shell elements and the whole structure treated as a three-dimensional system. A computer

program has been developed which can deal with various saddle types for the cables and also various types of connections between the tower and the deck. Only linear analysis will be discussed here.

The second part of the paper deals with the dynamic analysis of cable-stayed bridges by considering the bridge deck as a shell and assuming that the cables behave as springs. The mode shapes and frequencies of an example bridge has been computed and the effect of sectional area of cables on the frequencies is discussed. The present method yields bending as well as torsional modes, which the simplified plane frame type of analysis is incapable of giving. This fact is of great importance since aerodynamic test results showed that in the cable-stayed system the cables themselves provide a large resistance against torsional movement, which is the dangerous mode of oscillation for suspension bridges.

Static Analysis

A cable-stayed bridge is a three-dimensional structure which consists of two cable planes and a bridge deck as shown in Fig. 1. The finite element analysis requires the deck to be divided into rectangular shell elements (which is obtained simply by combining a bi-linear plane stress element and a non-conforming 12-degree polynomial plate bending element) and the tower into beam elements. In order to deal with various saddle types, a flexibility approach is used for determining the cable forces.

Referring to Fig. 1, let

F_c and F_t be the unknown redundant forces for the cables and tower respectively;

x_c and x_t be the deflections of plate at the connecting points between plate and cables and between plate and tower respectively due to F_c and F_t;

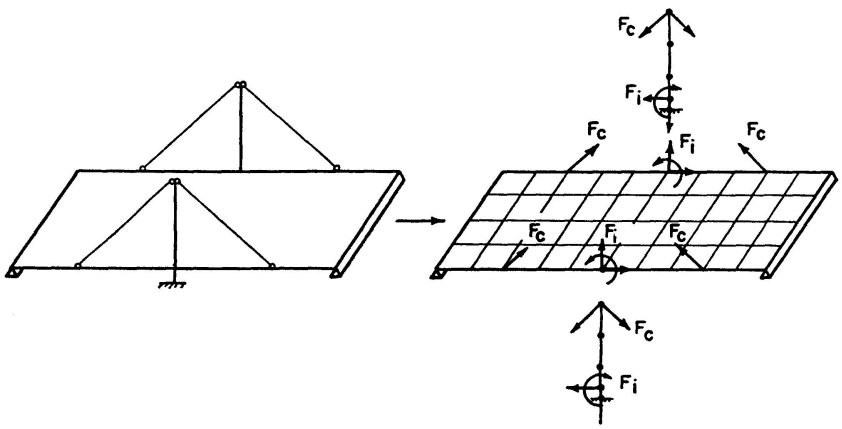

Fig. 1. Typical bridge with finite element idealization and redundant forces.

x'_c and x'_t be the deflections of the tower at connecting points between tower and cables and between tower and plate respectively due to F_c and F_t;

y_c and y_t be the deflections of the plate at the connecting points between plate and cables and between plate and tower respectively due to external loads; and

f_{ij} and f'_{ij} are the coefficients of the flexibility matrices for plate and tower respectively.

It is then possible to establish the following equations. For plate deflections

$$\begin{Bmatrix} x_c \\ x_t \end{Bmatrix} = \begin{bmatrix} f_{11} & f_{12} \\ f_{21} & f_{22} \end{bmatrix} \begin{Bmatrix} F_c \\ F_t \end{Bmatrix} + \begin{Bmatrix} y_c \\ y_t \end{Bmatrix}. \tag{1}$$

For tower deflections

$$\begin{Bmatrix} x'_c \\ x'_t \end{Bmatrix} = \begin{bmatrix} f'_{11} & f'_{12} \\ f'_{21} & f'_{22} \end{bmatrix} \begin{Bmatrix} F_c \\ F_t \end{Bmatrix}. \tag{2}$$

For compatibility between plate and tower

$$\{x_t\} = \{x'_t\}. \tag{3}$$

The relationship between the displacements at cable ends, x_c and x'_c, is more involved and is dependent on the type of cable saddle used (Fig. 2). For a fixed saddle (Fig. 2a), the cable forces are

$$\begin{aligned} S_i &= \frac{EA_i}{l_i}(-u_i \cos\alpha_i + w_i \sin\alpha_i + u_t \cos\alpha_i - w_t \sin\alpha_i), \\ S_j &= \frac{EA_j}{l_j}(-u_j \cos\alpha_j + w_j \sin\alpha_j + u_t \cos\alpha_j - w_t \sin\alpha_j). \end{aligned} \tag{4}$$

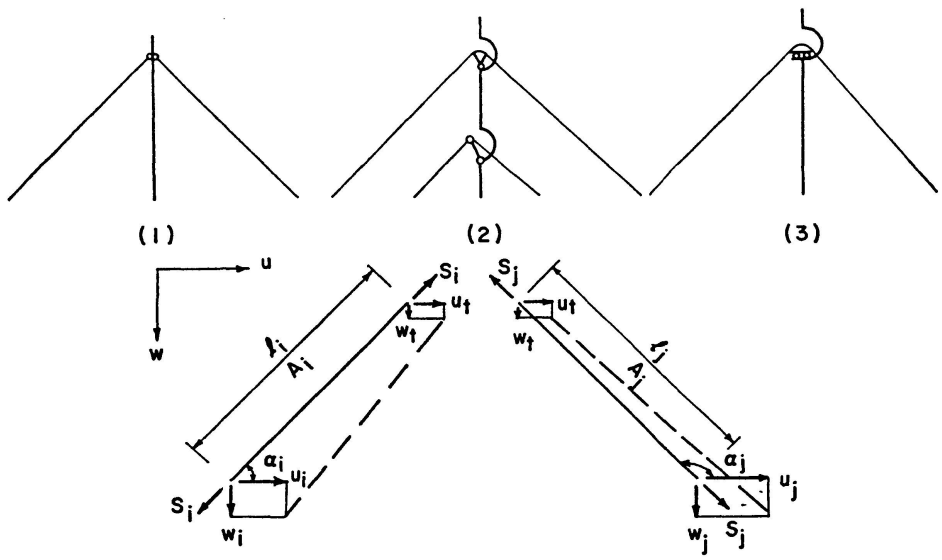

Fig. 2. Cable saddle types and cable forces and displacements.

For a pinned saddle (Fig. 2b)

$$S_i = \frac{E A_i A_j}{A_j l_i + A_i l_j}\{-u_i \cos\alpha_i + w_i \sin\alpha_i + u_t(\cos\alpha_i + \cos\alpha_j) - w_t(\sin\alpha_i + \sin\alpha_j) - u_j \cos\alpha_j + w_j \sin\alpha_j\},$$
$$S_j = S_i. \tag{5}$$

For a roller saddle (Fig. 2c)

$$S_i = \frac{E A_i A_j \cos\alpha_j}{A_j l_i \cos\alpha_j - A_i l_j \cos\alpha_i}\{-u_i \cos\alpha_i + w_i \sin\alpha_i + u_t(\cos\alpha_i + \cos\alpha_j) - w_t(\sin\alpha_i + \sin\alpha_j) - u_j \cos\alpha_j + w_j \sin\alpha_j\},$$
$$S_j = -\frac{\cos\alpha_i}{\cos\alpha_j} S_i. \tag{6}$$

In general, Eqs. (4), (5), and (6) can be written as

$$\{F_c\} = [C_1 \;\; C_2]\begin{Bmatrix} x_c \\ x_c' \end{Bmatrix}, \tag{7}$$

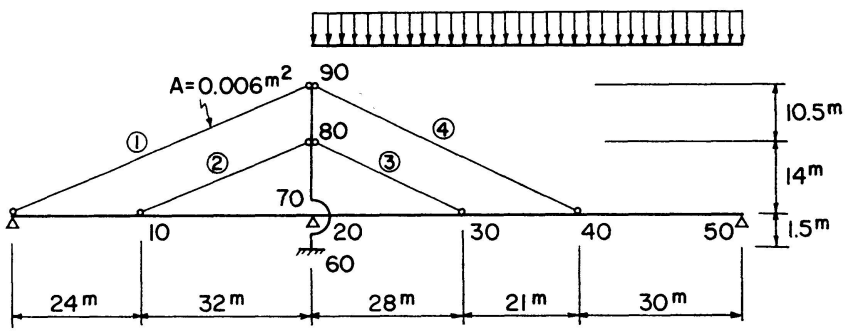

	0–10	10–20	20–30	30–40	40–50	60–70	70–80	80–90
I (in m⁴)	0.015	0.015	0.015	0.017	0.020	0.013	0.013	0.008
A (in m²)	0.12	0.12	0.12	0.13	0.14	0.08	0.08	0.06

Yong's modulus: Cable 1.6×10^7 Mp/m² Load: 2 Mp/m
Girder 2.1×10^7 Mp/m²

Cable forces (Mp), Bending Moments (Mp.m) and Axial forces (Mp)

	N_1	N_2	N_3	N_4	M_{10}	N_{10_l}	N_{10r}	M_{30}	N_{30_l}	N_{30r}	M_{60}	M_{80}
Reference [3]	122.9	97.3	28.1	109.1	−199.5	−158.8	−184.5	15.8	−84.5	−87.0	−447.7	268.9
Present analysis	122.6	97.2	28.4	108.6	−199.2	−158.0	−184.1	23.2	−184.1	−87.0	−442.6	266.2

Fig. 3. Plane frame cable-stayed bridge.

where C_1 and C_2 are matrices which are related to the cable characteristics. By combining Eqs. (1), (2), (3), and (7), the redundant forces can be computed through the following equation.

$$\begin{Bmatrix} F_c \\ F_l \end{Bmatrix} = -\begin{bmatrix} C_1 f_{11} + C_2 f'_{11} - I & C_1 f_{12} + C_2 f'_{12} \\ f_{21} - f'_{21} & f_{22} - f'_{22} \end{bmatrix}^{-1} \begin{Bmatrix} C_1 y_c \\ y_t \end{Bmatrix}. \tag{8}$$

Once the redundant forces have been solved, it requires then only a straightforward computation to determine all the other displacements and internal forces of the structure.

The same computer program can be used for solving plane frame cable-stayed structures, since it is only necessary to use the appropriate flexibility coefficients (for frame members) in Eq. (1). In fact, the program was firstly checked by solving the plane frame cable-stayed girder bridges shown in Fig. 3, and the results are compared with those of reference [3] in the same diagram.

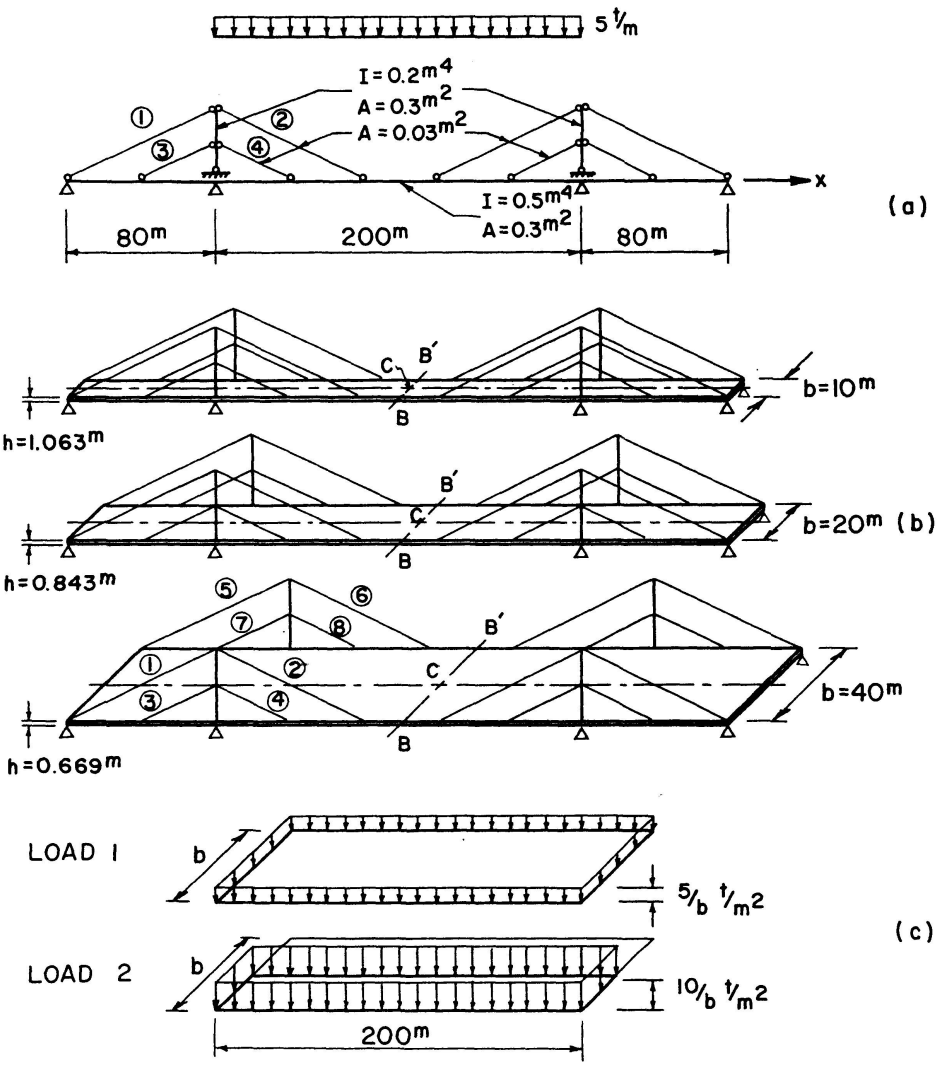

Fig. 4. Example of cable-stayed bridges.

Examples of Static Analysis

Fig. 4a shows a plane frame cable-stayed girder bridge which will be used as the basis of comparison for all examples. The three-dimensional behaviour of this type of structure is examined by analyzing three cases in which the girder is replaced by bridge decks with different widths (Fig. 4b), such that the overall moments of inertia for all transverse sections are the same. Two different loading cases are considered: a full uniformly distributed load and a partial uniformly distributed load over half of the deck, as is shown in Fig. 4c. These loads are equivalent to the line load for the girder of the plane frame structure.

Due to symmetry, only half of the bridge is analyzed, and the deck is divided into 56 shell elements.

Some results of the analysis are given in Table 1. The cable forces and the deflections and bending moments of the deck at mid-span are compared with the results of the plane frame analysis.

The results for full uniformly distributed load (Load 1) are symmetrical with respect to the longitudinal centre line of the bridge, and the transverse variations of deflections and moments are quite small. Therefore, the bridge can be safely analyzed as a plane frame structure under such loads.

On the other hand, the partial uniformly distributed load (Load 2) is not

Table 1. Internal Forces and Displacements for Bridges in Fig. 4

Bridge Deck		Plate $b=10$ m		Plate $b=20$ m		Plate $b=40$ m		Beam (Plane Frame Structure)
		Load 1	Load 2	Load 1	Load 2	Load 1	Load 2	
Cable Tension (in ton)	1	521.3	540.9	521.5	583.3	521.7	663.5	521.0
	5	521.3	501.7	521.5	459.7	521.7	379.9	
	2	452.2	470.8	452.1	509.9	451.0	579.6	448.4
	6	452.2	433.6	452.1	394.3	451.0	322.4	
	3	212.3	234.9	208.7	271.0	193.8	297.2	208.2
	7	212.3	189.7	208.7	146.4	193.9	90.6	
	4	350.5	375.2	347.5	417.8	335.3	465.1	348.5
	8	350.5	325.8	347.5	277.2	335.3	205.5	
Displacement (in metre)	B	0.4365	0.4536	0.4370	0.4908	0.4394	0.5620	0.4611
	C	0.4360	0.4360	0.4357	0.4357	0.4444	0.4444	
	B′	0.4365	0.4194	0.4370	0.3832	0.4394	0.3168	
Longitudinal Bending Moment $\left(\text{in } \frac{\text{ton} \times \text{metre}}{\text{metre}}\right)$	B	275.5	238.6	144.8	160.9	87.1	111.8	
	C	273.2	273.2	138.2	138.3	72.3	72.3	
	B′	275.5	267.4	144.8	128.7	87.1	62.4	

symmetrical with respect to the centre line of the bridge, and the forces and displacements at symmetrical points are now different, with the discrepancies becoming larger for increasing bridge width.

An examination of the influence surfaces of cable forces and deflections and bending moments at a selected point on the bridge ($b = 40$ m) given in

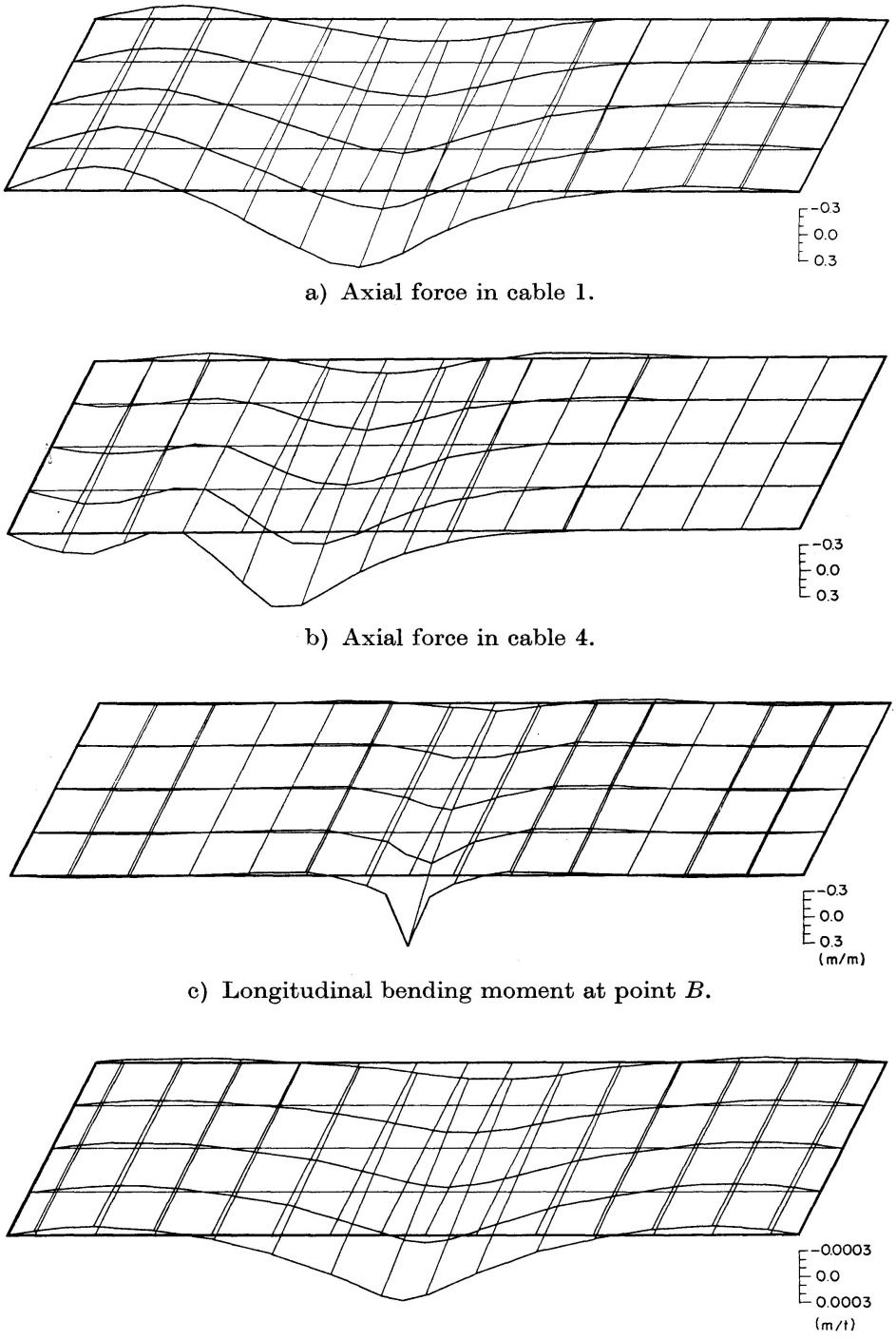

a) Axial force in cable 1.

b) Axial force in cable 4.

c) Longitudinal bending moment at point B.

d) Deflection at point B.

Fig. 5. Influence surfaces.

Fig. 5 will also show that eccentric loads will induce significantly different responses at symmetrical points on two sides of the bridge. Such transverse behaviour will not be brought out by the simple plane frame analysis.

Dynamic Analysis and Examples

The well-known displacement method using lumped mass technique is used in the present analysis. Strictly speaking, the method is only applicable to bridges with cable saddle type (1). However, if saddle type (2) is approximated by inserting an imaginary member as is shown in Fig. 2, the structure can also be analyzed by this method. To simplify the analysis, the cables are treated as springs, thus implying that they can take up compression as well as tension. Such an assumption has been used by TANG [4], and is justified to some extent because of the relatively high stresses which existed in the cables under dead load.

The examples shown in Fig. 4a and Fig. 4b ($b = 20$ m) are used here again for free vibration analysis. In order to understand better the effect of cables on the dynamic behaviour of the structure, three different sectional areas of cables and a different cable arrangement (8 cables instead of 4 cables, as shown in Fig. 6) are used for the three-dimensional structure. The mass per unit length of the bridge is kept, of course, constant for all cases.

The frequencies for the different cases mentioned above are listed in Table 2,

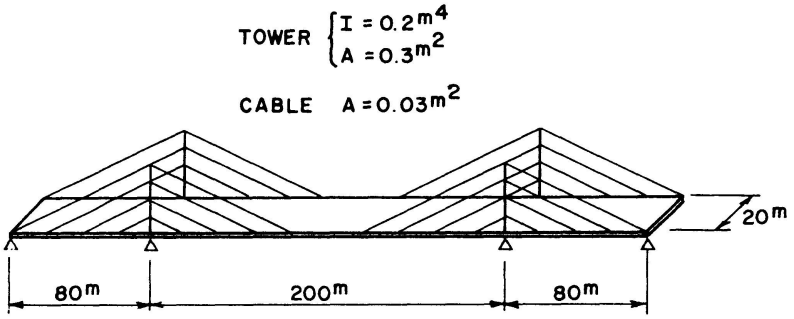

Fig. 6. Example bridge for dynamic analysis.

Table 2. Natural Frequencies (in c/s) of Cable-stayed Bridges

Sectional Area of Each Cable (m^2)	Transverse Modes				Torsional Modes	
	Mode 1	Mode 2	Mode 3	Mode 4	Mode 1	Mode 2
0.00	0.432	1.21	1.90	2.21	3.65	7.35
0.03	1.17	1.50	2.20	2.99	4.11	7.70
0.05	1.40	1.58	2.38	3.33	4.44	7.84
0.03 (8 cables)	1.31	1.56	2.42	3.58	4.41	7.88
0.03 (beam)	1.13	1.48	2.22	2.90		

and 4 transverse modes and 2 torsional modes have been included. An examination of the results shows that the cables have a stiffening effect and tend to raise the frequencies significantly with increasing cable area, and that for the

Fig. 7. Mode shapes of deck and towers.

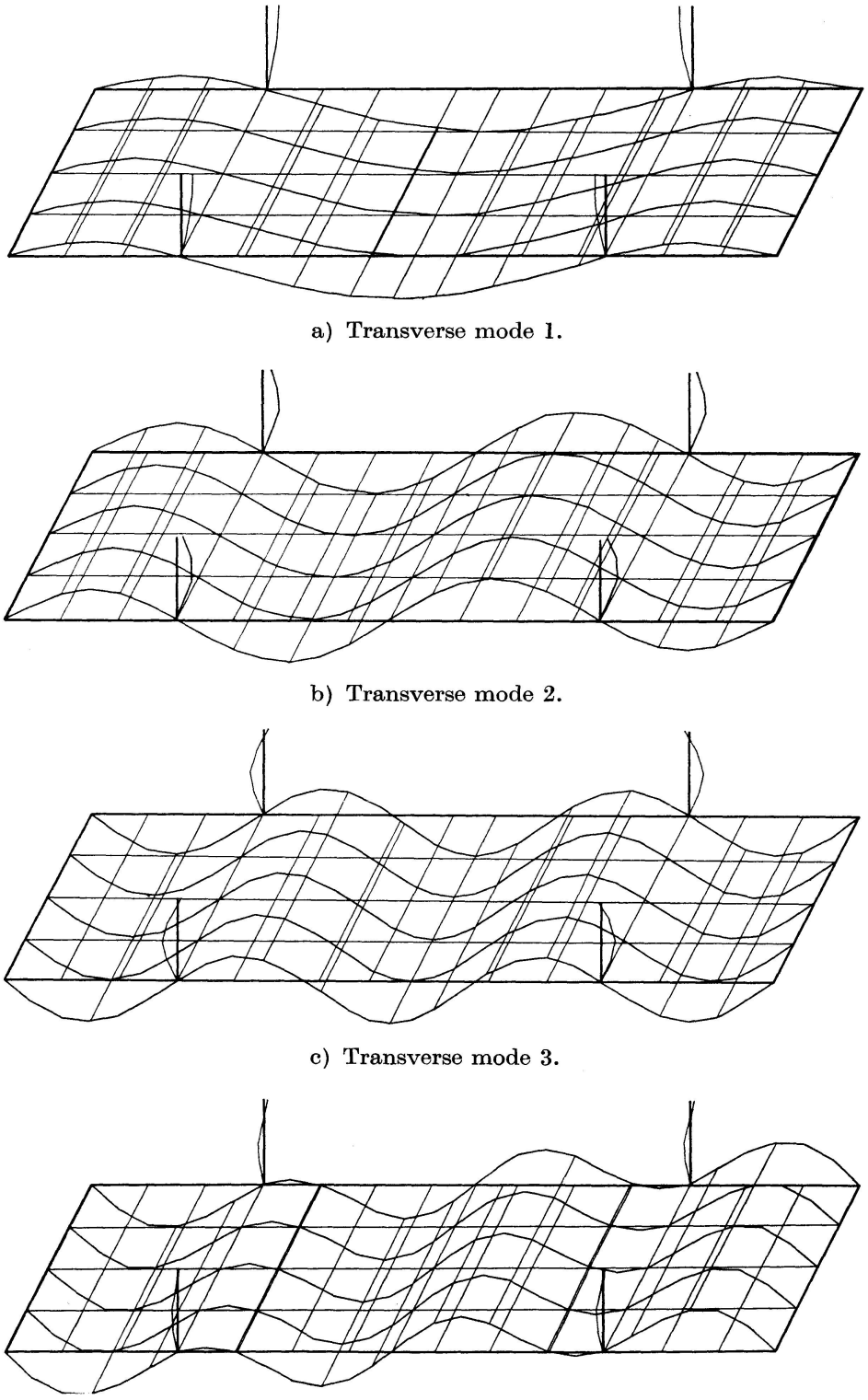

a) Transverse mode 1.

b) Transverse mode 2.

c) Transverse mode 3.

d) Transverse mode 4.

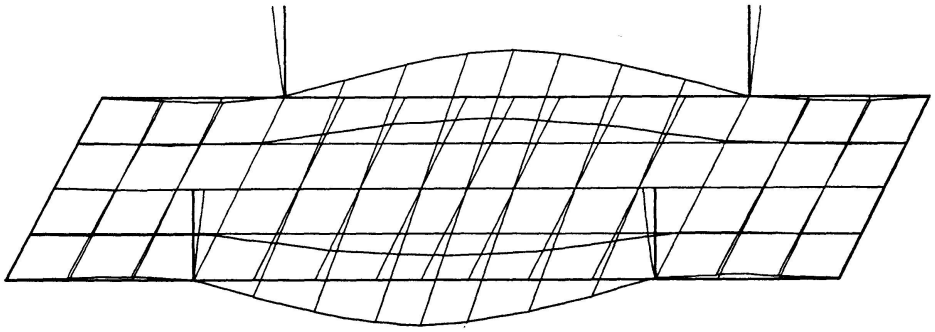

e) Torsional mode 1.

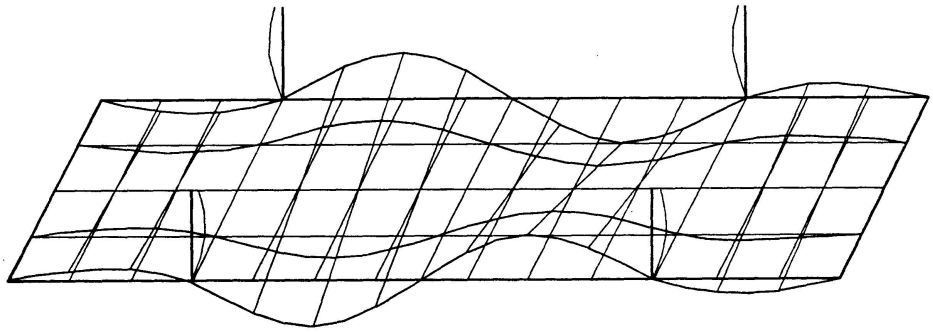

f) Torsional mode 2.

Mode 1

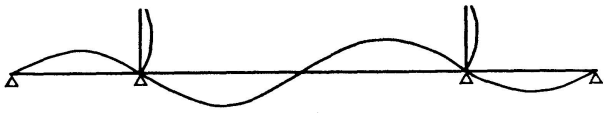

Mode 2

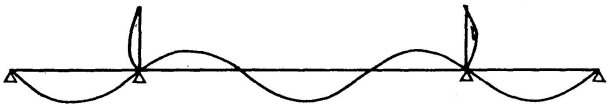

Mode 3

Mode 4

Fig. 8. Mode shapes of the plane frame cable-stayed structure.

same total cable area, the number of cables used has little effect on the frequencies.

The mode shapes of the deck and towers for the case of $0.03\,m^2$ cables are plotted in Fig. 7, while the mode shapes of the girder and towers are shown in Fig. 8. The torsional modes can be obtained only when the bridge is treated as a three-dimensional structure.

Conclusion

The finite element method has been successfully applied to the static and dynamic analysis of cable-stayed bridges and the three-dimensional characteristics of the structures have been fully demonstrated. The examples show that the plane frame analysis commonly used in design is insufficient to give all aspects of behaviour of the cable-stayed bridges.

Notation

A_i, A_j	sectional areas of cable
C_1, C_2	coefficient matrices of cable equation
E	Young's Modulus
F_c, F_t	redundant forces
f_{ij}, f'_{ij}	coefficients of flexibility matrix
l_i, l_j	lengths of cable
S_i, S_j	cable forces
x_c, x_t	displacements of plate due to redundant force
x'_c, x'_t	displacements of tower due to redundant force
y_c, y_t	displacements of plate due to external force
u_i, u_j, u_t	horizontal displacements
w_i, w_j, w_t	vertical displacements
α_i, α_j	slope angles of cable
I	unit matrix

References

1. A. Feige: Evolution of German Cable-stayed Bridges. Acier-Stahl-Steel, 1966, 31 (12), p. 523–532.
2. F. Leonhardt, and W. Zellner: Cable-stayed Bridges. Report on latest developments. Canadian Structural Engineering Conference, 1970, CISC, Toronto, Ontario, Canada.
3. W. Protte, and W. Tross: Simulation als Vorgehensweise bei der Berechnung von Schrägseilbrücken. Der Stahlbau, 1966, 7, p. 208–211.

4. M. C. TANG: Analysis of Cable-stayed Girder Bridges. Proc. ASCE, 1971, 97 (May), ST 5, p. 1481–1495.
5. B. STAFFORD SMITH: The Single Plane Cable-stayed Girder Bridge, A Method of Analysis Suitable for Computer Use. Proc. ICE, 1967, 37 (May), p. 183–194.
6. M. S. TROITSKY, and B. E. LAZAR: Model Analysis and Design of Cable-stayed Bridges. Proc. ICE, 1971, 48 (March), p. 439–464.
7. B. STAFFORD SMITH: A Linear Method of Analysis for Double Plane Cable-stayed Girder Bridges. Proc. ICE, 1968, 39, p. 85–94.

Summary

The finite element method has been applied to the static and dynamic analysis of cable-stayed bridges. A number of examples have been worked out for several different parameters such as bridge width, cable area and cable arrangements, and the significance of the results are discussed. The three-dimensional analysis is also compared with the plane frame type of analysis commonly used in design.

Résumé

La méthode des éléments finis a été employée à l'analyse statique et dynamique de ponts à haubans. Plusieurs exemples ont été élaborés pour différents paramètres, tels que largeur du pont, superficie et disposition des câbles et la signification des résultats est discutée. L'analyse tridimensionnelle est également comparée avec le type bidimensionnel employé à l'analyse habituelle.

Zusammenfassung

Die Methode der finiten Elemente wurde auf die statische und dynamische Analyse von Schrägkabelbrücken angewandt. Eine Anzahl von Beispielen wurde für einige verschiedene Parameter, wie Brückenbreite, Seilbereich und Seilanordnung ausgearbeitet und die Bedeutung der Ergebnisse diskutiert. Die dreidimensionale Analyse wird auch mit dem zweidimensionalen Typ bei der üblichen, im Entwurf angewandten Analyse verglichen.