Zeitschrift: IABSE publications = Mémoires AIPC = IVBH Abhandlungen

Band: 32 (1972)

Artikel: Dynamic analysis of frameworks by frequency dependent stiffness matrix approach

Autor: Övünç, Bülent

DOI: https://doi.org/10.5169/seals-24957

Nutzungsbedingungen

Die ETH-Bibliothek ist die Anbieterin der digitalisierten Zeitschriften auf E-Periodica. Sie besitzt keine Urheberrechte an den Zeitschriften und ist nicht verantwortlich für deren Inhalte. Die Rechte liegen in der Regel bei den Herausgebern beziehungsweise den externen Rechteinhabern. Das Veröffentlichen von Bildern in Print- und Online-Publikationen sowie auf Social Media-Kanälen oder Webseiten ist nur mit vorheriger Genehmigung der Rechteinhaber erlaubt. Mehr erfahren

Conditions d'utilisation

L'ETH Library est le fournisseur des revues numérisées. Elle ne détient aucun droit d'auteur sur les revues et n'est pas responsable de leur contenu. En règle générale, les droits sont détenus par les éditeurs ou les détenteurs de droits externes. La reproduction d'images dans des publications imprimées ou en ligne ainsi que sur des canaux de médias sociaux ou des sites web n'est autorisée qu'avec l'accord préalable des détenteurs des droits. En savoir plus

Terms of use

The ETH Library is the provider of the digitised journals. It does not own any copyrights to the journals and is not responsible for their content. The rights usually lie with the publishers or the external rights holders. Publishing images in print and online publications, as well as on social media channels or websites, is only permitted with the prior consent of the rights holders. Find out more

Download PDF: 23.10.2025

ETH-Bibliothek Zürich, E-Periodica, https://www.e-periodica.ch

Dynamic Analysis of Frameworks by Frequency Dependent Stiffness Matrix Approach

Analyse dynamique de poutres à treillis à l'aide de matrices de rigidité dépendant de la fréquence

Dynamische Analyse von Fachwerken durch Näherungen mit frequenzabhängigen Steifigkeitsmatrizen

BÜLENT ÖVÜNÇ
Ph. D., Professor of Civil Engineering
University of Southwestern Louisiana, U.S.A.

Introduction

The dynamic analysis of the multi-element systems has been treated by considering the mass of the system lumped at the joints; the constituent elements are assumed to be massless springs. Natural frequencies and normal modes are obtained by solving characteristic values and characteristic vectors from the determinant function of a singular dynamic matrix either by analytical methods [1], [2], [3], [4] or by numerical methods [4], [5], [6]. The dynamics of frames with nonuniform elastic elements have been investigated by dividing each nonuniform element into uniform subelements [5]. A solution method for an element with continuously varying cross section has been given [7], [8]. In the lumped mass idealization concentrated masses are placed at the joints or nodal points in the directions of the assumed element degrees of freedoms. They are calculated by assuming that the material within the mean locations on either side of the specified displacement behaves like a rigid body while the remainder of the element does not participate in the motion. Therefore the dynamic couplings between the element displacements are excluded. An equivalent mass matrix has been derived in order to include the dynamic couplings between the element displacements [9], [10], [11]. The frequency dependent mass and stiffness matrices for a bar element have been obtained by assuming the displacements be given by a series in ascending powers of the natural circular frequency [11], [12]. Hermitian polynomials are used for

the approximation of the deformations of structural elements such as beams, plates. In the case of plane frame systems, the establishment of the elastic stiffness matrix and of the mass matrix is straightforward [13]. The classical Bernoulli-Euler theory of flexural vibration has been recognized as inadequate for higher modes [14]. The literature of vibration problems based on the TIMOSHENKO's beam theory [15] is voluminous [16], [17], [18], [19]. A general formulation of dynamic matrix and computational procedures [20] have been presented, and the dynamic stiffness coefficients are derived as nondimensional parameters corresponding to the effects of rotatory inertia, and of shear and bending deformation [21], but still the masses are considered as lumped at the joints. By dropping the appropriate parameter, the stiffness coefficients can be applied to a problem with various considerations of Timoshenko's theory, Rayleigh theory, bending and shear, and of Bernoulli-Euler theory. The usual engineering practice to neglect the secondary effects, such as rotatory inertia and transverse shear, in calculating the natural frequencies may be justified to some extent for slender beams, at best for few first modes. In this case, the influence of secondary effects is small. In short beams, particularly for higher modes, the secondary effects become more important. Experimental investigations [22], [23] have shown that the experimental frequencies are lower than the frequencies obtained from refined beam theories, the discrepancies between theory and experiment are rather small. Recent [24] work, on the shear constant of short beams involved in the Timoshenko equation, yielded values to the shear constant as high as 0.870 instead of the original value of 2/3 proposed by Timoshenko in the case of rectangular cross section. Starting from three-dimensional equations of equilibrium of the theory of elasticity and introducing approximate simplifying assumptions, one dimensional theory of wave propagation has been deduced [25]. The equations governing the transverse vibrations of beams have been formulated starting from representative physical assumptions such as zero transverse direct strains and complete freedom to axial displacement [26]. Introducing a suitable expression for axial displacement distribution and using the Kantorovich form of Rayleigh-Ritz procedure simpler equations to various order of approximation have been obtained. The well known elementary beam equation and the Timoshenko theory correspond to some special cases in this formulation.

A new approach is derived for the analysis of systems under dynamic loading. This approach eliminates the concept of lumping the masses of the members at the joints. The masses are assumed to be continuously attached to the member as they are. If a concentrated mass exists on the system, its point of application is considered as a joint of the system. Therefore the inertia forces due to concentrated masses are taken into account as inertial joint forces. The stiffness matrices of the members are obtained considering the inertia forces of the masses of the members and are combined by means of code numbers in order to generate the structure stiffness matrix. The

matrix equation of motion consists of an inertia force term of the concentrated masses, if any, plus a stiffness term being equal to the externally applied dynamic forces plus a term due to fixed end reactions of the members. The natural frequencies are obtained by setting the left side of the matrix equation of motion to zero. Once the natural frequencies have been determined, one natural frequency at a time is introduced into the equations of motion to determine the modal shape corresponding to the natural frequency considered. The member end forces are obtained from the product of member stiffness matrix by the member end displacements and rotations corresponding to one natural frequency at a time.

Procedure of Analysis

A right-handed cartezian coordinate axes system related to the members is selected such that the element centerline is taken as the y axis, while the major and minor principal intertia axes of the cross section constitute the x and z axes respectively. These axes are called "member axes" and are referred to a general stationary $X\ Y\ Z$ cartesian coordinate axes system called "common axes system" Fig. 1. The joint translations and forces acting on the member are

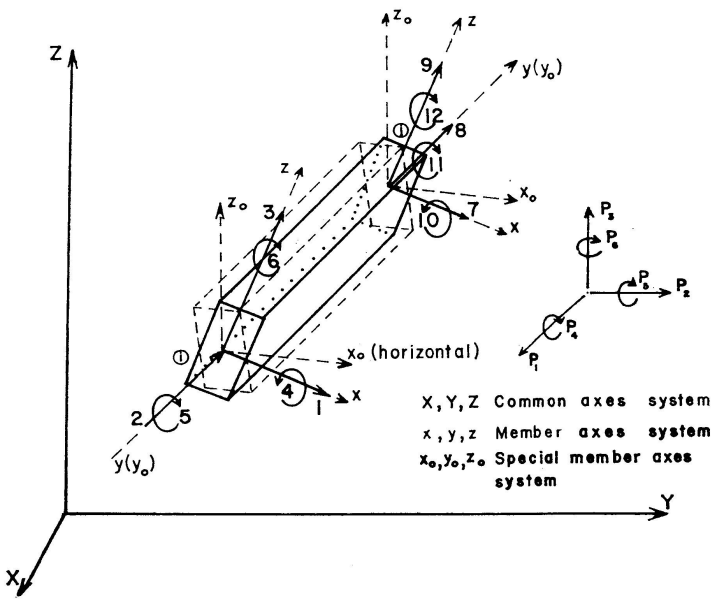

Fig. 1. Coordinate Axes System and Member Freedoms.

positive along the positive directions of the coordinate axes, while the positive directions of the joint rotations and the moments are determined in accordance with the right hand screw rule (Fig. 1). It is assumed that the material is homogeneous and isotropic, the stresses remain within the elastic limites of the material, the strains and the displacements are infinitesimal. The Ber-

noulli-Euler hypothesis for the deflection of the bars such that a plane cross section perpendicular to the centerline of the bar before the deformations remains plane and perpendicular to the centerline after the deformations. The damping is neglected.

The frequency dependent stiffness matrix is derived first for member with uniform cross section subjected to uncoupled deformations such as axial displacements, torsional rotations, and bending in two orthogonal planes. A similar derivation is applied to the member with nonuniform cross section. The effect of rotatory inertia and the transverse shear can be taken into account without any difficulty.

Member with Uniform Cross Section

The frequency dependent member stiffness matrix is derived separately for uncoupled displacements and rotations then they are combined.

Member Subjected to Axial Deformation

The axial displacement function of a bar member subjected to a free vibration is given by

$$d_y = Y(y) f(t) \tag{1}$$

where

$$Y(y) = C_1 \cos \alpha y + C_2 \sin \alpha y \tag{2}$$

and

$$f(t) = A \cos wt + B \sin wt. \tag{3}$$

If the part $Y(y)$ of the axial displacements related with the position y is resolved into its components Y_2 and Y_8 due to d_2 and d_8, respectively (Fig. 1), the Eq. (2) can be written as

$$\begin{Bmatrix} Y_2 \\ Y_8 \end{Bmatrix}^T = (\cos \alpha y \;\; \sin \alpha y) \begin{bmatrix} C_{11} & C_{12} \\ C_{21} & C_{22} \end{bmatrix}. \tag{4}$$

The integration constants $\begin{Bmatrix} C_{11} \\ C_{21} \end{Bmatrix}$ and $\begin{Bmatrix} C_{12} \\ C_{22} \end{Bmatrix}$ are to be determined from the boundary conditions imposed to the displacements Y_2 and Y_8 at an arbitrary time t after the vibration has started. The integration constants A and B are to be determined from the initial conditions of the vibration at time t equal to zero.

Setting the boundary conditions on Y_2 and Y_8 such as:

$$\begin{aligned} &\text{for } Y_2\text{:} \quad \text{at } y=0 \quad Y_2=d_2, \quad \text{at } y=L \quad Y_2=0, \\ &\text{for } Y_8\text{:} \quad \text{at } y=0 \quad Y_8=0, \quad \text{at } Y=L \quad Y_8=d_8, \end{aligned} \tag{5}$$

Introducing the boundary conditions (Eq. (5)) into the Eq. (4) one has

$$[A][C] = [D], \tag{6}$$

where

$$[A] = \begin{bmatrix} 1 & 0 \\ \cos\alpha L & \sin\alpha L \end{bmatrix}, \quad [C] = \begin{bmatrix} C_{11} & C_{12} \\ C_{21} & C_{22} \end{bmatrix} \text{ and } [D] = \begin{bmatrix} d_2 & 0 \\ 0 & d_8 \end{bmatrix}. \tag{7}$$

If the Eq. (6) is premultiplied by $[A]^{-1}$, one has

$$[C] = [A]^{-1}[D]. \tag{8}$$

Replacing $[C]$ in Eq. (4)

$$\begin{Bmatrix} Y_2 \\ Y_8 \end{Bmatrix}^T = \{F_y\}^T [A]^{-1}[D], \tag{9}$$

where

$$\{F_y\}^T = (\cos\alpha y \;\; \sin\alpha y)$$

and

$$[A]^{-1} = \begin{bmatrix} 1 & 0 \\ -\dfrac{\cos\alpha L}{\sin\alpha L} & \dfrac{1}{\sin\alpha L} \end{bmatrix}. \tag{10}$$

The part of the internal force P related with the position y is

$$P = A E \frac{dY}{dy} = A E(-C_1 \sin\alpha y + C_2 \cos\alpha y), \tag{11}$$

where A is the cross sectional area and E the Young's Modulus.

The member end reactions at $y=0$ and $y=L$ due to d_2 and d_8 can be written from Eq. (11) as follows.

$$[P] = [H][C], \tag{12}$$

where

$$[P] = \begin{bmatrix} P_{11} & P_{12} \\ P_{21} & P_{22} \end{bmatrix} \text{ and } [H] = A E \alpha \begin{bmatrix} 0 & -1 \\ -\sin\alpha L & \cos\alpha L \end{bmatrix}. \tag{13}$$

If the matrix $[C]$ from Eq. (8) is replaced into the Eq. (12) one has,

$$[P] = [H][A]^{-1}[D]. \tag{14}$$

The member end reactions matrix $[P]$ is the frequency dependent member stiffness matrix $[k]$ when the diagonal displacements matrix $[D]$ is set to be a unit matrix $[U]$; therefore from Eq. (14) one has

$$[k] = [H][A]^{-1}. \tag{15}$$

The expanded form of the frequency dependent member stiffness matrix is:

$$[k] = A E \alpha \begin{bmatrix} \dfrac{1}{\tan\alpha L} & -\dfrac{1}{\sin\alpha L} \\ -\dfrac{1}{\sin\alpha L} & \dfrac{1}{\tan\alpha L} \end{bmatrix}.$$

Member Subjected to Torsional Rotation

The twist angle function of a member subjected to a free vibration is given by

$$\theta = \phi(y) f(t), \tag{16}$$

where

$$\phi(y) = C_1 \cos \alpha y + C_2 \sin \alpha y, \tag{17}$$

$$f(t) = A \cos wt + B \sin wt. \tag{18}$$

If it is noticed that the similarity of twist angle function θ (Eq. (16)) with the axial displacement function d_y (Eq. (1)) and the stress strain relations in both cases, the frequency dependent member stiffness matrix of a member subjected to a torsional rotation can be written easily from the frequency dependent member stiffness matrix of a member subjected to an axial displacement by simply replacing AE axial force rigidity term by GJ torsional rigidity term. Thus the frequency dependent member stiffness matrix under a torsional rotation can be written from Eq. (15) as

$$[k] = GJ\alpha \begin{bmatrix} \dfrac{1}{\tan \alpha L} & -\dfrac{1}{\sin \alpha L} \\ -\dfrac{1}{\sin \alpha L} & \dfrac{1}{\tan \alpha L} \end{bmatrix}. \tag{19}$$

Member Subjected to Bending in YZ Plane

The deflection function of a member subjected to a free vibration is given by

$$d_z = Z(y) f(t), \tag{20}$$

where

$$Z(y) = C_1 \sin \alpha y + C_2 \cos \alpha y + C_3 \sinh \alpha y + C_4 \cosh \alpha y \tag{21}$$

and

$$f(t) = A \cos wt + B \sin wt. \tag{22}$$

If the part $Z(y)$ of the deflection related with the position y is resolved into its components Z_3, Z_4, Z_9 and Z_{10} due to d_3, d_4, d_9 and d_{10}, respectively, the Eq. (21) can be written as

$$\begin{Bmatrix} Z_3 \\ Z_4 \\ Z_9 \\ Z_{10} \end{Bmatrix}^T = (\sin \alpha y \;\; \cos \alpha y \;\; \sinh \alpha y \;\; \cosh \alpha y) \begin{bmatrix} C_{11} & C_{12} & C_{13} & C_{14} \\ C_{21} & C_{22} & C_{23} & C_{24} \\ C_{31} & C_{32} & C_{33} & C_{34} \\ C_{41} & C_{42} & C_{43} & C_{44} \end{bmatrix}. \tag{23}$$

The integration constants

$$\begin{Bmatrix} C_{11} \\ C_{21} \\ C_{31} \\ C_{41} \end{Bmatrix}, \quad \begin{Bmatrix} C_{12} \\ C_{22} \\ C_{32} \\ C_{42} \end{Bmatrix}, \quad \begin{Bmatrix} C_{13} \\ C_{23} \\ C_{33} \\ C_{43} \end{Bmatrix} \quad \text{and} \quad \begin{Bmatrix} C_{14} \\ C_{24} \\ C_{34} \\ C_{44} \end{Bmatrix},$$

are to be determined from the boundary conditions imposed to the displacements and rotations d_3, d_4, d_9 and d_{10} at an arbitrary time t after the vibration has started. The integration constants A and B are to be determined from the initial conditions of the vibration at time t equals zero.

Setting the boundary conditions on Z_3, Z_4, Z_9 and Z_{10} such as

$$\begin{aligned}
&\text{for } Z_3 \quad \text{at } y=0 \quad Z_3 = d_3, \ \frac{dZ_3}{dy}=0, \quad \text{at } y=L \quad Z_3=0, \ \frac{dZ_3}{dy}=0,\\
&\text{for } Z_4 \quad \text{at } y=0 \quad Z_4 = 0, \ \frac{dZ_4}{dy}=d_4, \quad \text{at } y=L \quad Z_4=0, \ \frac{dZ_4}{dy}=0,\\
&\text{for } Z_9 \quad \text{at } y=0 \quad Z_9 = 0, \ \frac{dZ_9}{dy}=0, \quad \text{at } y=L \quad Z_9=d_9, \ \frac{dZ_9}{dy}=0,\\
&\text{for } Z_{10} \quad \text{at } y=0 \quad Z_{10} = 0, \ \frac{dZ_{10}}{dy}=0, \quad \text{at } y=L \quad Z_{10}=0, \ \frac{dZ_{10}}{dy}=d_{10}.
\end{aligned} \tag{24}$$

Introducing the boundary conditions (Eq. (24)) into the Eq. (23), one has

$$[A][C]=[D], \tag{25}$$

where

$$[A]=\begin{bmatrix} 0 & 1 & 0 & 1 \\ \alpha & 0 & \alpha & 0 \\ \sin\alpha L & \cos\alpha L & \sinh\alpha L & \cosh\alpha L \\ \alpha\cos\alpha L & -\alpha\sin\alpha L & \alpha\cosh\alpha L & \alpha\sinh\alpha L \end{bmatrix},$$

$$[C]=\begin{bmatrix} C_{11} & C_{12} & C_{13} & C_{14} \\ C_{21} & C_{22} & C_{23} & C_{24} \\ C_{31} & C_{32} & C_{33} & C_{34} \\ C_{41} & C_{42} & C_{43} & C_{44} \end{bmatrix} \text{ and } [D]=\begin{bmatrix} d_3 & 0 & 0 & 0 \\ 0 & d_4 & 0 & 0 \\ 0 & 0 & d_9 & 0 \\ 0 & 0 & 0 & d_{10} \end{bmatrix}. \tag{26}$$

If the Eq. (25) is premultiplied by $[A]^{-1}$, one has

$$[C]=[A]^{-1}(D]. \tag{27}$$

Replacing $[C]$ into Eq. (23)

$$\begin{Bmatrix} Z_3 \\ Z_4 \\ Z_9 \\ Z_{10} \end{Bmatrix}^T = \{F_y\}^T[A]^{-1}[D], \tag{28}$$

where

$$\{F_y\}^T = (\sin\alpha y \ \cos\alpha y \ \sinh\alpha y \ \cosh\alpha y). \tag{29}$$

The part of the internal shear force V and bending moment M related with the position y are:

$$V = -E I_x \frac{d^3 Z}{dy^3} = -E I_x \alpha^3 [-C_1\cos\alpha y + C_2\sin\alpha y + C_3\cosh\alpha y + C_4\sinh\alpha y],$$

and (30)

$$M = -E I_x \frac{d^2 Z}{dy^2} = -E I_x \alpha [-C_1\sin\alpha y - C_2\cos\alpha y + C_3\sinh\alpha y + C_4\cosh\alpha y]. \tag{31}$$

The member end reactions V and M at $y=0$ and $y=L$ due to d_3, d_4, d_9 and d_{10} can be written from Eqs. (30) and (31) as follows

$$\begin{bmatrix} P_{11} & P_{12} & P_{13} & P_{14} \\ P_{21} & P_{22} & P_{23} & P_{24} \\ P_{31} & P_{32} & P_{33} & P_{34} \\ P_{41} & P_{42} & P_{43} & P_{44} \end{bmatrix} = E\,I_x\,\alpha^2 \begin{bmatrix} -\alpha & 0 & \alpha & 0 \\ 0 & 1 & 0 & -1 \\ \alpha\cos\alpha L & -\alpha\sin\alpha L & -\alpha\cosh\alpha L & -\alpha\sinh\alpha L \\ -\sin\alpha L & -\cos\alpha L & \sinh\alpha L & \cosh\alpha L \end{bmatrix} \begin{bmatrix} C_{11} & C_{12} & C_{13} & C_{14} \\ C_{21} & C_{22} & C_{23} & C_{24} \\ C_{31} & C_{32} & C_{33} & C_{34} \\ C_{41} & C_{42} & C_{43} & C_{44} \end{bmatrix}$$

or putting in matric equation form,

$$[P] = [H][C], \tag{32}$$

where

$$[P] = \begin{bmatrix} P_{11} & P_{12} & P_{13} & P_{14} \\ P_{21} & P_{22} & P_{23} & P_{24} \\ P_{31} & P_{32} & P_{33} & P_{34} \\ P_{41} & P_{42} & P_{43} & P_{44} \end{bmatrix}$$

and

$$[H] = E\,I_x\,\alpha^2 \begin{bmatrix} -\alpha & 0 & \alpha & 0 \\ 0 & 1 & 0 & -1 \\ \alpha\cos\alpha L & -\alpha\sin\alpha L & -\alpha\cosh\alpha L & -\alpha\sinh\alpha L \\ -\sin\alpha L & \cos\alpha L & \sinh\alpha L & \cosh\alpha L \end{bmatrix}.$$

If the matrix $[C]$ from Eq. (27) is replaced into Eq. (32) one has

$$[P] = [H][A]^{-1}[D]. \tag{33}$$

The member end reactions matrix $[P]$ is the frequency dependent member stiffness matrix $[k]$ when the diagonal displacements and rotations matrix $[D]$ is set to be a unit matrix $[U]$. Therefore from Eq. (33) one has,

$$[k] = [H][A]^{-1}. \tag{34}$$

The expanded form of the frequency dependent member stiffness matrix is,

$$[k] = \frac{\alpha\,E\,I_x}{\Delta} \begin{bmatrix} \alpha^2(\cos\alpha L\sinh\alpha L + \sin\alpha L\cosh\alpha L) & \alpha\sin\alpha L\sinh\alpha L & -\alpha^2(\sin\alpha L + \sinh\alpha L) & -\alpha(\cos\alpha L - \cosh\alpha L) \\ & \sin\alpha L\cosh\alpha L - \cos\alpha L\sinh\alpha L & \alpha(\cos\alpha L - \cosh\alpha L) & -(\sin\alpha L - \sinh\alpha L) \\ \text{symmetric} & & \alpha^2(\cos\alpha L\sinh\alpha L + \sin\alpha L\cosh\alpha L) & -\alpha\sin\alpha L\sinh\alpha L \\ & & & \sin\alpha L\cosh\alpha L - \cos\alpha L\sinh\alpha L \end{bmatrix}, \tag{35}$$

where

$$\Delta = 1 - \cos\alpha L\cosh\alpha L.$$

Member Subjected to Bending in XZ Plane

The derivation of the frequency dependent member stiffness matrix under bending in the XZ plane is the same as bending in the YZ plane except that the moment of inertia, I_x, with respect to the x axis has to be replaced by the moment of inertia I_z with respect to the z axis. Therefore the bending stiffness matrix for bending in the XZ plane can be written as

$$[k] = \frac{\alpha E I_z}{\Delta} \begin{bmatrix} \alpha^2(\cos\alpha L \sinh\alpha L + \sin\alpha L \cosh\alpha L) & \alpha \sin\alpha L \sinh\alpha L & -\alpha^2(\sin\alpha L + \sinh\alpha L) & -\alpha(\cos\alpha L - \cosh\alpha L) \\ & \sin\alpha L \cosh\alpha L - \cos\alpha L \sinh\alpha L & \alpha(\cos\alpha L - \cosh\alpha L) & -(\sin\alpha L - \sinh\alpha L) \\ & & \alpha^2(\cos\alpha L \sinh\alpha L + \sin\alpha L \cosh\alpha L) & -\alpha \sin\alpha L \sinh\alpha L \\ \text{symmetric} & & & \sin\alpha L \cosh\alpha L - \cos\alpha L \sinh\alpha L \end{bmatrix}, \quad (36)$$

where $$\Delta = 1 - \cos\alpha L \cosh\alpha L.$$

The frequency dependent member stiffness matrix $[k]$ for all the member end freedoms is obtained by combining the $[k]$ matrices for the axial displacement (Eq. (15)), the torsional rotation (Eq. (19)) and the bending in two planes (Eqs. (35), (36)).

Member with Nonuniform Cross Section

The variation of the area A, the moment of inertia I of a member with nonuniform cross section is assumed as

$$A = (ny+m), \qquad I_x = I_z = (ny+m)^3, \qquad J_x = I_x/2. \tag{37}$$

The coefficients n and m are determined from the section properties at both ends of the member.

Member Subjected to Axial Deformation

It can be noticed that the equation of motion of an element subjected to axial deformation,

$$E\frac{\delta^2 dy}{\delta x^2} - \frac{\rho}{g}\frac{\delta^2 dy}{\delta t^2} = 0 \tag{38}$$

is independent of the cross section area A. Therefore the equations from Eq. (1) to Eq. (10) of uniform cross section case remain valid also for this case.

The part of the internal force P related with the position y is

$$P = EA\frac{dY}{dy} = E\alpha(ny+m)(-C_1 \sin\alpha y + C_2 \cos\alpha y). \tag{39}$$

The member end reactions at $y=0$ and $y=L$ due to d_2 and d_8 can be written from Eq. (39)

$$[P] = [H][C], \tag{40}$$

where

$$[P] = \begin{bmatrix} P_{11} & P_{12} \\ P_{21} & P_{22} \end{bmatrix} \text{ and } [H] = E\alpha \begin{bmatrix} 0 & -m \\ -(nL+m)\sin\alpha L & (nL+m)\cos\alpha L \end{bmatrix}. \tag{41}$$

If the matrix $[C]$ from Eq. (8) is replaced into the Eq. (40), one has,

$$[P] = [H][A]^{-1}[D]. \tag{42}$$

The member end reactions matrix $[P]$ is the frequency dependent member stiffness matrix when the diagonal displacements matrix $[D]$ is set to be a unit matrix $[U]$. Therefore from Eq. (42) one has

$$[k] = [H][A]^{-1}. \tag{43}$$

The expanded form of the frequency dependent member stiffness matrix is

$$[k] = E\alpha \begin{bmatrix} \dfrac{m}{\tan\alpha L} & -\dfrac{m}{\sin\alpha L} \\ -\dfrac{nL+m}{\sin\alpha L} & \dfrac{nL+m}{\tan\alpha L} \end{bmatrix}.$$

Member Subjected to Torsional Rotation

In this case the frequency dependent member stiffness matrix, $[k]$, can be written easily if the analogy with the member subjected to axial deformation is considered. Therefore the expanded form of the frequency dependent member stiffness matrix is,

$$[k] = \frac{G\alpha}{2} \begin{bmatrix} \dfrac{m^3}{\tan\alpha L} & -\dfrac{m^3}{\sin\alpha L} \\ -\dfrac{(nL+m)^3}{\sin\alpha L} & \dfrac{(nL+m)^3}{\tan\alpha L} \end{bmatrix}. \tag{44}$$

Member Subjected to Bending in YZ Plane

The differential equation of the motion of a member subjected to bending in the YZ plane is given by,

$$E\frac{\delta^2}{\delta y^2}\left[I_x \frac{\delta^2 d_z}{\delta y^2}\right] = -\frac{A\rho}{g}\frac{\delta^2 d_z}{\delta t^2}. \tag{45}$$

The deflection d_z is a function of the position y and the time t but can be expressed in separable variables form such as

$$d_z = Z(y)f(t). \tag{46}$$

Therefore the differential equation of motion (Eq. (45)) can be written as follows.

$$E \frac{d^2}{dy^2}\left[I_x \frac{d^2 Z(y)}{dy^2}\right] = \frac{A\rho}{g} w^2 Z(y). \tag{47}$$

Introducing the corresponding functions of the area A, the moment of inertia I_x in Eq. (47) and simplifying one obtains

$$(n y+m)^2 \frac{d^4 Z}{dy^4} + 6 n (n y+m) \frac{d^3 Z}{dy^3} + 6 n^2 \frac{d^2 Z}{dy^2} - \frac{2\rho w^2}{g} Z = 0. \tag{48}$$

The above fourth order linear differential equation with variable coefficients is equivalent to a pair of second order linear differential equations such as:

$$(n y+m) \frac{d^2 Z}{dy^2} + 2 n \frac{dZ}{dy} + k_0^2 Z = 0 \tag{49}$$

and

$$(n y+m) \frac{d^2 Z}{dy^2} + 2 n \frac{dZ}{dy} - k_0^2 Z = 0, \tag{50}$$

where

$$k_0^4 = \frac{2\rho w^2}{E g}.$$

The general solution of Eq. (48) is a linear combination of the general solutions of Eq. (49) and (50). To solve the last two equations the variables are changed as follows

$$S = (n y+m)^{1/2} Z,$$
$$s = (n y+m)^{1/2}$$

and the Eqs. (49) and (50) become

$$\frac{d^2 S}{ds^2} + \frac{1}{s}\frac{dS}{ds} + \left(4 k^2 - \frac{1}{s^2}\right) S = 0, \tag{51}$$

$$\frac{d^2 S}{ds^2} + \frac{1}{s}\frac{dS}{ds} - \left(4 k^2 - \frac{1}{s^2}\right) S = 0, \tag{52}$$

where

$$k = k_0/n.$$

Eqs. (51) and (52) are, respectively, a Bessel's equation, and a modified Bessel's equation of order one. Their general solutions are, respectively.

$$S = C_1 J_1(2 k s) + C_2 Y_1(2 k s), \tag{53}$$

$$S = C_3 I_1(2 k s) + C_4 K_1(2 k s), \tag{54}$$

where J_1 and Y_1 are the Bessel function of the first and second kind, respectively, of order one, and I_1 and K_1 are the modified Bessel functions of the first and second kind, respectively, of order one.

Adding the solutions (Eqs. (53) and (54)) and returning to the variables y and $Z(y)$, the general solution of the Eq. (48) is obtained in the form

$$\begin{aligned} Z(y) = (n y+m)^{-1/2} \{ & C_1 J_1[2 k (n y+m)^{1/2}] + C_2 Y_1[2 k (n y+m)^{1/2}] \\ & + C_3 I_1[2 k (n y+m)^{1/2}] + C_4 K_1[2 k (n y+m)^{1/2}] \}. \end{aligned} \tag{55}$$

If the part $Z(y)$ of the deflection related with the position y is resolved into its components Z_3, Z_4, Z_9, and Z_{10} due to d_3, d_4, d_9 and d_{10}, respectively, the Eq. (55) can be written as

$$\begin{Bmatrix} Z_3 \\ Z_4 \\ Z_9 \\ Z_{10} \end{Bmatrix}^T = (ny+m)^{-1/2}\{J_1[2k(ny+m)^{1/2}]\, Y_1[2k(ny+m)^{1/2}]\, I_1[2k(ny+m)^{1/2}]$$
$$K_1[2k(ny+m)^{1/2}]\}\begin{bmatrix} C_{11} & C_{12} & C_{13} & C_{14} \\ C_{21} & C_{22} & C_{23} & C_{24} \\ C_{31} & C_{32} & C_{33} & C_{34} \\ C_{41} & C_{42} & C_{43} & C_{44} \end{bmatrix}. \tag{56}$$

The integration constants,

$$\begin{Bmatrix} C_{11} \\ C_{21} \\ C_{31} \\ C_{41} \end{Bmatrix}, \quad \begin{Bmatrix} C_{12} \\ C_{22} \\ C_{32} \\ C_{42} \end{Bmatrix}, \quad \begin{Bmatrix} C_{13} \\ C_{23} \\ C_{33} \\ C_{43} \end{Bmatrix} \quad \text{and} \quad \begin{Bmatrix} C_{14} \\ C_{24} \\ C_{34} \\ C_{44} \end{Bmatrix}$$

are to be determined from the boundary conditions imposed to the displacements and rotations d_3, d_4, d_9 and d_{10} at an arbitrary time t after the vibration has started.

Setting the boundary conditions on Z_3, Z_4, Z_9 and Z_{10} such as:

$$\begin{aligned}
&\text{for } Z_3 \quad \text{at } y=0 \quad Z_3 = d_3, \ \frac{dZ_3}{dy}=0, \quad \text{at } y=L \quad Z_3 = 0, \ \frac{dZ_3}{dy}=0,\\
&\text{for } Z_4 \quad \text{at } y=0 \quad Z_4 = 0, \ \frac{dZ_4}{dy}=d_4, \quad \text{at } y=L \quad Z_4 = 0, \ \frac{dZ_4}{dy}=0,\\
&\text{for } Z_9 \quad \text{at } y=0 \quad Z_9 = 0, \ \frac{dZ_9}{dy}=0, \quad \text{at } y=L \quad Z_9 = d_9, \ \frac{dZ_9}{dy}=0,\\
&\text{for } Z_{10} \quad \text{at } y=0 \quad Z_{10} = 0, \ \frac{dZ_{10}}{dy}=0, \quad \text{at } y=L \quad Z_{10} = 0, \ \frac{dZ_{10}}{dy}=d_{10}.
\end{aligned} \tag{57}$$

Introducing the boundary conditions (Eq. (57)) into the Eq. (56) the matrix $[C]$ is solved as

$$[C] = [A]^{-1}[D], \tag{58}$$

where $[A]^{-1}$ is obtained from Eq. (57) and $[D]$ is the diagonal matrix of the member ends displacements and rotations.

Replacing $[C]$ into Eq. (56) one has:

$$\begin{Bmatrix} Z_3 \\ Z_4 \\ Z_9 \\ Z_{10} \end{Bmatrix}^T = \{F_y\}^T [A]^{-1}[D], \tag{59}$$

where $$\{F_y\}^T = (n\,y+m)^{-1/2}\{J_1[2\,k\,(n\,y+m)^{1/2}]\,Y_1[2\,k\,(n\,y+m)^{1/2}]\,I_1[2\,k\,(n\,y+m)^{1/2}]\,K_1[2\,k\,(n\,y+m)^{1/2}]\}.$$

The part of the internal shear force V and bending moment M related with the position y are:

$$V = -E\,I_x \frac{d^3 Z}{dy^3} \tag{60}$$

and

$$M = -E\,I_x \frac{d^2 Z}{dy^2}. \tag{61}$$

The member end reactions V and M at $y=0$ and $y=L$ due to d_3, d_4, d_9 and d_{10} can be written from Eqs. (60) and (61), in matrix form as

$$[P] = [H]\,[C], \tag{62}$$

where the matrix $[H]$ is obtained from Eqs. (60) and (61) for $y=0$ and $y=L$ and the matrix $[P]$ is formed by the end reactions for the corresponding boundary conditions.

If the matrix $[C]$ from Eq. (58) is replaced into Eq. (62) one has

$$[P] = [H]\,[A]^{-1}\,[D]. \tag{63}$$

The member end reactions matrix $[P]$ is the frequency dependent member stiffness matrix $[k]$ when the diagonal displacements and rotations matrix $[D]$ is set to be a unit matrix $[U]$. Therefore from Eq. (63) one has

$$[k] = [H]\,[A]^{-1}. \tag{64}$$

Member Subjected to Bending in XZ Plane

The derivation of the frequency dependent member stiffness matrix under the bending in the XZ plane is the same as the bending in the YZ plane except that the moment of inertia I_x with respect to the x axis has to be replaced by the moment of inertia I_z with respect to the z axis.

The frequency dependent member stiffness matrix $[k]$ for all the member end freedoms is obtained by combining the $[k]$ matrices for axial displacement, torsional rotation and bending in two orthogonal planes.

Secondary Effects

All the effects which are negligible in the usual engineering practices are considered as secondary effects. The secondary effects may become important in some certain cases. For beams with small slenderness ratio, short beams, the effects of transverse shear and the rotatory inertia moments become important. For the systems with large deformations, the influence of axial force on the frequencies of the transverse vibrations of the elements are in noticeable order.

The Effect of Transverse Shear and Rotatory Inertia

In the cases of lumped mass matrix and the equivalent mass matrix analyses, the effect of transverse shear and rotatory inertia can be easily taken into account by adding a factor to the member stiffness matrix and to the mass matrix.

In the case of the frequency dependent stiffness matrix analysis, if the Timoshenko's theory is considered for a beam with uniform cross section, the differential equations of the motion can be expressed as:

$$E\,I\frac{\delta^4 Z}{\delta y^4}+\frac{\rho A}{g}\frac{\delta^2 Z}{\delta t^2}-\frac{I\rho}{g}\left(1+\frac{E}{k'G}\right)\frac{\delta^4 Z}{\delta y^2\,\delta t^2}+\frac{I\rho^2}{g^2 k' G}\frac{\delta^4 Z}{\delta t^4}=0 \tag{65}$$

and

$$E\,I\frac{\delta^4 \Psi}{\delta y^4}+\frac{\rho A}{g}\frac{\delta^2 \Psi}{\delta t^2}-\frac{I\rho}{g}\left(1+\frac{E}{k'G}\right)\frac{\delta^4 \Psi}{\delta y^2\,\delta t^2}+\frac{I\rho^2}{g^2 k' G}\frac{\delta^4 \Psi}{\delta t^4}=0, \tag{66}$$

where Ψ is the slope of the deflected configuration under the bending without the effect of transverse shear, k' is the ratio of the average shear stress on a section to the product of the shear modulus and shear strain at the neutral axis of the member.

The integrations of the Eqs. (65) and (66) yield

$$Z = C_1\cos\alpha y + C_2\sin\alpha y + C_3\cos h\beta y + C_4\sin h\beta y, \tag{67}$$

$$\Psi = C_1'\cos\alpha y + C_2'\sin\alpha y + C_3'\cos h\beta y + C_4'\sin h\beta y, \tag{68}$$

where C_1, C_2, C_3 and C_4 are the independent integration constants. The integration constants C_1', C_2', C_3' and C_4' are not independent and can be expressed in terms of C_1, C_2, C_3 and C_4.

A derivation similar to the case without the effect of transverse shear and rotatory inertia can be performed. If Z and Ψ are resolved to their components Z_3, Z_4, Z_9, Z_{10} and Ψ_3, Ψ_4, Ψ_9, Ψ_{10}, respectively, and if the boundary conditions and the relationship between C_i' and C_i

$$[C'] = [Q][C] \tag{69}$$

are taken into account, the components of Z and Ψ can be written as

$$\begin{Bmatrix} Z_3 \\ Z_4 \\ Z_9 \\ Z_{10} \end{Bmatrix}^T = \{F\}^T[A]^{-1}[D] \tag{70}$$

and

$$\begin{Bmatrix} \Psi_3 \\ \Psi_4 \\ \Psi_9 \\ \Psi_{10} \end{Bmatrix}^T = \{F\}^T[Q][A]^{-1}[D], \tag{71}$$

where $\{F\}^T = (\cos\alpha y \ \sin\alpha y \ \cosh\beta y \ \sinh\beta y)$.

$[A]$ = the matrix obtained by introducing the boundary conditions in Eq. (67).

$[D]$ = the diagonal matrix of the member ends displacements and rotations.

The part of the internal shear force V and the bending moment M with the position y are

$$M = -EI\frac{\delta\Psi}{\delta y}, \tag{72}$$

$$V = k'GA\left(\frac{\delta Z}{\delta y} - \Psi\right). \tag{73}$$

The member end reactions V and M at $y=0$ and $y=L$ due to d_3, d_4, d_9 and d_{10} can be written from Eqs. (72) and (73) as follows

$$[P] = [H][A]^{-1}[D], \tag{74}$$

where $[H]$ is the matrix obtained from the boundary values of Eqs. (72), (73) and for $y=0$ and $y=L$.

The member end reactions matrix $[P]$ is the frequency dependent member stiffness matrix $[k]$ when the diagonal displacements and rotations matrix $[D]$ is set to be a unit matrix $[U]$. Therefore from Eq. (74), one has

$$[k] = [H][A]^{-1}. \tag{75}$$

Conclusion

The frequency dependent stiffness matrix is derived for members in space with uniform and with nonuniform cross section. The error involved by considering the lumping of the masses of the members at the joints of the system are eliminated. The concentrated masses existing on the system, if any, are duly taken into account. The effect of the rotatory inertia and the transverse shear are also considered. The lumped mass or the equivalent mass matrix solution require the division of the elements into sub-elements in order to obtain a close approximation in the natural frequencies especially for higher modes. It is not necessary to divide the elements into sub-elements to refine the approximation in the natural frequencies of any mode, either for uniform nor for nonuniform cross section elements, since the natural frequencies obtained by frequency dependent stiffness matrix approach are independent of the division of the elements into sub-elements. The lumped mass or the equivalent mass matrix solutions for continuous system furnish as many natural frequencies as the number of unknowns. The frequency dependent stiffness matrix furnishes an infinity number of natural frequencies.

References

1. Rogers, G. L.: Dynamics of Framed Structures. John Wiley & Sons, New York, 1959.
2. Rubenstein, M. F., and Hurty, W. C.: Dynamics of Structures. Prentice-Hall, Englewood Cliffs, New Jersey, 1964.
3. Pestel, E. C., and Leckie, F. A.: Matrix Methods in Elastomechanics. McGraw-Hill, New York, 1963.
4. Biggs, J. M.: Introduction to Structural Dynamics. McGraw-Hill, New York, 1964.
5. Cheng, F. Y.: Dynamics of Frames with Nonuniform Elastic Members. Journal of the Structural Division, ASCE, Vol. 94, No. ST 10, October 1968, pp. 2411–2428.
6. Cakiroglu, A., and Ozmen, G.: Numerical Integration of Forced Vibration Equations. Journal of the Structural Division, ASCE, Vol. 94, No. EM 3, June 1968, pp. 711–729.
7. Housner, G. W., and Keightley, W. O.: Vibrations of Linearly Tapered Beams. Transactions ASME, Vol. 128 (1963), Part I, pp. 1020–1048.
8. Volterra, E., and Zachmanoglu, E. C.: Dynamics of Vibrations. Merrill Books, Inc., Columbus, Ohio, 1965.
9. Archer, J. S.: Consistent Mass Matrix for Distributed Mass Systems. Journal of the Structural Division, ASCE, Vol. 89, No. ST 4, August 1963, pp. 161–168.
10. Archer, J. S.: Consistent Matrix Formulation for Structural Analysis Using Finite Element Techniques. Journal of AIAA, Vol. 3, No. 11, October 1965, pp. 1910–1918.
11. Przemieniecki, J. S.: Theory of Matrix Structural Analysis. McGraw-Hill, New York, 1968.
12. Przemieniecki, J. S.: Quadratic Matrix Equations for Determining Vibration Modes and Frequencies of Continuous Elastic Systems. Proc. Conf. Matrix Method in Structural Mechanics, Wright-Patterson Air Force Base, Ohio, October 26–28, 1965, AFFDL-TR 60–80, 1966.
13. Pestel, E. C.: Dynamic Stiffness Matrix Formulation by Means of Hermitian Polynomials. Proc. Conf. Matrix Methods in Structural Mechanics, Wright-Patterson Air Force Base, Ohio, October 26–28, 1965, AFFDL-TR 60–80, 1966, pp. 479–502.
14. Clough, R. W.: On the Importance of Higher Modes of Vibration in the Earthquake Response of a Tall Building. Bulletin of the Seismological Society of America, Vol. 45, 1955, pp. 289–301.
15. Timoshenko, S. P.: Vibration Problems in Engineering. D. Van Nostrand Co., New York, 1955.
16. Gaines, J. H., and Volterra, E.: Transverse Vibrations of Cantilever Bars of Variable Cross Sections. The Journal of the Acoustical Society of America, Vol. 39, No. 4, 1966, pp. 674–679.
17. Huang, T. C.: The Effect of Rotatory Inertia and of Shear Deformation on the Frequency and Normal Mode Equations of Uniform Beam with Simple End Conditions. Journal of Applied Mechanics, Vol. 28, No. 4, 1961, pp. 578–584.
18. Lee, H. C., and Bisshopp, K. E.: Application of Integral Equations to the Flexural Vibration of a Wedge with Rotatory Inertia and Shear. Journal of the Franklin Institute, Vol. 277, No. 4, 1964, pp. 327–336.
19. Rissone, R. F., Williams, J. J.: Vibrations of Nonuniform Cantilever Beams. The Engineer, September 1965, pp. 497–506.
20. Wang, C. K.: Matrix Methods of Structural Analysis. International Textbook Co., Scranton, Pa., 1970.
21. Cheng, F. Y.: Vibrations of Timoshenko Beams and Frameworks. Journal of the Structural Division, ASCE, Vol. 96, No. ST 3, March 1970, pp. 551–571.

22. Traill-Nash, R. W., and Collar, A. R.: The Effect of Shear Flexibility and Rotatory Inertia on the Bending Vibrations of Beams. Quarterly Journal of Mechanics and Applied Mathematics, Vol. 6, 1953, pp. 186–222.
23. Kordes, E. D., and Kruszewski, E. T.: Experimental Investigations on the Vibrations of a Built-up Rectangular Beam. TN 3618, 1956, NACA.
24. Cowper, G. R.: The Shear Coefficient in Timoshenko Beam Theory. Journal of Applied Mechanics, Vol. 33, June 1966, pp. 335–340.
25. Medick, M. A.: One Dimensional Theories of Wave Propagation and Vibrations in Elastic Bars of Rectangular Cross Section. Journal of Applied Mechanics, Vol. 33, September 1966, pp. 439–495.
26. Krishna Murty, A. V.: Vibrations of Short Beams. Journal of AIAA Vol. 8, No. 1, January 1970, pp. 34–38.

Summary

A new approach has been derived for the analysis of the systems under dynamic loading. This approach eliminates the concept of lumping the masses of the elements at the joints. The masses are assumed to be continuously attached to the elements as they are. If a concentrated mass exists on the system, its point of application is considered as a joint of the system. Therefore the inertia forces due to the concentrated masses are taken into account as inertial joint forces. It is assumed that the material is homogeneous and isotropic, also the Hooke's law and Bernoulli-Euler hypothesis are valid. The damping is neglected. The frequency dependent mass matrix approach does not require the division of the elements into sub-elements in order to refine the approximation in natural frequencies, especially for higher modes, and furnishes an infinity number of natural frequencies.

Résumé

Une nouvelle méthode de solution pour le calcul de systèmes sous charges dynamiques a été élaborée. Les charges y sont reparties selon leur distribution véritable sur l'élément. Le point d'application d'une charge concentrée est considéré comme nœud du système. Par là, les forces d'inertie provenant des charges concentrées sont introduites dans le calcul comme forces d'inertie de nœud. On suppose un matériau homogène et isotrope, de même sont valables la loi de Hooke et l'hypothèse Bernoulli-Euler. L'amortissement est négligé. La méthode de la matrice de masse dépendant de la fréquence ne demande pas la subdivision des éléments pour améliorer l'approximation des oscillations propres, surtout pour des types plus compliqués. Elle fournit, d'autre part, un nombre infini d'oscillations propres.

Zusammenfassung

Eine neue Lösungsmethode wurde zur Berechnung von Systemen unter dynamischen Lasten entwickelt. Die Lasten werden in ihrer wirklichen Verteilung über das Element angenommen. Der Angriffspunkt einer konzentrierten Last wird als Knoten des Systems betrachtet. Dadurch kann man die von konzentrierten Lasten herrührenden Trägheitskräfte als Knotenträgheitskräfte in die Berechnung einführen. Es wird ein homogen-isotropes Material angenommen; ebenso soll das Hookesche Gesetz und die Euler-Bernoulli-Hypothese gültig sein. Die Dämpfung wird vernachlässigt. Die Methode der frequenzabhängigen Massmatrizen erfordert keine Unterteilung der Elemente in Subelemente, um die Approximation der Eigenschwingungen zu verbessern (besonders für komplizierte Schwingungstypen) und liefert eine unbegrenzte Zahl von Eigenschwingungen.