**Zeitschrift:** IABSE publications = Mémoires AIPC = IVBH Abhandlungen
**Band:** 29 (1969)

**Artikel:** On the splitting tests of the hollow cylinder specimens
**Autor:** Övünç, Bülent
**DOI:** https://doi.org/10.5169/seals-22909

**Nutzungsbedingungen**
Die ETH-Bibliothek ist die Anbieterin der digitalisierten Zeitschriften auf E-Periodica. Sie besitzt keine Urheberrechte an den Zeitschriften und ist nicht verantwortlich für deren Inhalte. Die Rechte liegen in der Regel bei den Herausgebern beziehungsweise den externen Rechteinhabern. Das Veröffentlichen von Bildern in Print- und Online-Publikationen sowie auf Social Media-Kanälen oder Webseiten ist nur mit vorheriger Genehmigung der Rechteinhaber erlaubt. Mehr erfahren

**Conditions d'utilisation**
L'ETH Library est le fournisseur des revues numérisées. Elle ne détient aucun droit d'auteur sur les revues et n'est pas responsable de leur contenu. En règle générale, les droits sont détenus par les éditeurs ou les détenteurs de droits externes. La reproduction d'images dans des publications imprimées ou en ligne ainsi que sur des canaux de médias sociaux ou des sites web n'est autorisée qu'avec l'accord préalable des détenteurs des droits. En savoir plus

**Terms of use**
The ETH Library is the provider of the digitised journals. It does not own any copyrights to the journals and is not responsible for their content. The rights usually lie with the publishers or the external rights holders. Publishing images in print and online publications, as well as on social media channels or websites, is only permitted with the prior consent of the rights holders. Find out more

**Download PDF:** 09.02.2026

**ETH-Bibliothek Zürich, E-Periodica, https://www.e-periodica.ch**

# On the Splitting Tests of the Hollow Cylinder Specimens

*Essais de ruine sur des tronçons de cylindres creux*

*Über Spaltversuche an Hohlzylinderproben*

BÜLENT ÖVÜNÇ
M. ACI, Ph. D., Assoc. Professor, University of Southwestern Louisiana

This article describes the analytical study of stress distributions within a hollow cylinder due to diametrically applied concentrated loads on its outer or inner boundaries assuming linear elastic behavior.

Increase of the diametrical concentrated loads causes the failure of the hollow cylinder by splitting along the same diameter on which the concentrated forces lie. The failure behavior is close to the failure of beams under constant moment rather than the proper splitting test of cylinders where a constant tensile stress is predominant.

Application of concentrated loads on the inner boundary does not require a costly testing machine and the tests may be performed at any small construction site.

In recent years splitting tests on cylinder specimens [1] have been adopted as a convenient measure of the tensile strength of concrete, although, the split section along the external load line is not subjected to uniaxial tensile stress condition (pure tensile) but to a biaxial stress condition. The value of the compressive stress on perpendicular direction is three times the value of tensile stress [2]. No reliable theory of the strength of the concrete under combined stress has emerged for successful practical use. The difficulty lies on the non-homogeneous nature of the concrete, on its behavior at high stresses influenced by microcraking and other discontinuity phenomena [3]. Its material characteristics are affected also by the variation of temperature, moisture content [4], etc. In spite of all these discrepancies the split test on cylinder specimens is still a convenient measure of the tensile strength of concrete compared to the measures of two other types of tests, such as direct pull tests on briquettes and modulus of rupture test. The former tests suffer from the difficulty to eliminate

eccentricity of the line of action of the load and from the premature failure at the ends due to the stress concentrations near the gripping devices [5, 6]. In the latter tests, the tensile strength computed by assuming the concrete as a linearly elastic material is significantly higher than would be obtained from uniaxial tensile strength [7]. The splitting tests have been extended to cube and beam specimens [8]. The present paper deals with the stress distributions in hollow cylinder specimens. The external loads may be applied arbitrarily on outer and inner boundaries with the condition that they satisfy the equilibrium.

## Procedure of Analysis

The procedure of analysis is an application of MUSKHELISHVILI's [9] complex variable method to the solution of the circular ring subjected to the loads acting on its boundary. The two independent complex variable functions, whose combination gives the AIRY stress function, are expressed in infinite polynomial series with unknown coefficients. These unknown coefficients are determined by the boundary conditions. Hence the two independent functions are obtained in infinite polynomial series form. For given external load, in order to increase the convergence these polynomial series are decomposed into logarithmic functions and polynomial series which converge rapidly.

Let the circular region, $S$, be bounded by two concentric circles $L_1$ and $L_2$ with outer radius $R_1$ and inner radius $R_2$, whose center being at the origin of coordinate axes (Fig. 1).

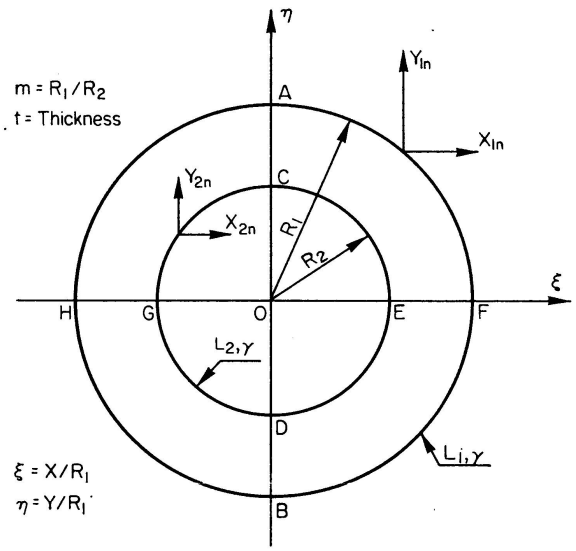


Fig. 1.

$X_{1n}$, $Y_{1n}$ and $X_{2n}$, $Y_{2n}$ are the kown components of the external forces acting respectively on the boundaries $L_1$ and $L_2$. They will be assumed to be continuous and single valued on $L_1$ and $L_2$, satisfying the equilibrium conditions, and varying with polar angle $\theta$ from the positive $\theta x$ axis in a direction

such that the region $S$ always remains at the left hand side while moving along the boundaries $\gamma$.

The boundary conditions may be written

$$\varphi(z)+z\bar{\varphi}'(\bar{z})+\bar{\psi}(\bar{z}) = \begin{cases} f_1'+i f_2' & \text{on } L_1, \ (z = R_1 e^{i\theta}), \\ f_1''+i f_2'' & \text{on } L_2, \ (z = R_2 e^{i\theta}), \end{cases} \tag{1}$$

where
$$f_1+i f_2 = i\int_\gamma (X_n+i Y_n)\,ds = i R\int_0^\theta (X_n+i Y_n)\,d\theta. \tag{2}$$

The expression $f_1+i f_2$ may be expanded in the series,

$$f_1+i f_2 = \sum_{-\infty}^{+\infty} A_n e^{in\theta} \tag{3}$$

the coefficients of which may be calculated by the fourier expansion of the given external load on the boundary.

It is known that the functions $\varphi(z)$ and $\psi(z)$ must be holomorphic inside the ring, so that they may be represented by Laurent series. Thus inside $S$,

$$\varphi(z) = \sum_{-\infty}^{+\infty} a_n z^n, \qquad \psi(z) = \sum_{-\infty}^{+\infty} a_n' z^n, \tag{4}$$

$$\bar{\varphi}'(\bar{z}) = \sum_{-\infty}^{+\infty} n\bar{a}_n \bar{z}^{(n-1)}, \qquad \bar{\psi}(\bar{z}) = \sum_{-\infty}^{+\infty} \bar{a}_n' \bar{z}^n. \tag{5}$$

Assuming these series to converge, not only in the interior of the region $S$, but also on the boundaries $L_1$ and $L_2$, and substituting them in (1), one finds,

$$\sum_{-\infty}^{+\infty} a_n r^n e^{in\theta} + r e^{i\theta}\sum_{-\infty}^{+\infty} n\bar{a}_n r^{n-1} e^{-(n-1)i\theta} + \sum_{-\infty}^{+\infty} \bar{a}_n' r^n e^{-in\theta} = \begin{cases} \sum_{-\infty}^{+\infty} A_n' e^{in\theta} & \text{on } L_1, \\ \sum_{-\infty}^{+\infty} A_n'' e^{in\theta} & \text{on } L_2. \end{cases} \tag{6}$$

The unknown coefficients, $a_n$ and $a_n'$ are calculated by comparing the coefficients of $e^{in\theta}$. Thus the functions $\varphi(z)$ and $\psi(z)$ are determined.

From the functions $\varphi(z)$ and $\Psi(z)$, the stresses may be calculated in the polar coordinates as follows,

$$\begin{aligned} \sigma_r+\sigma_\theta &= 2[\phi(z)+\bar{\phi}(\bar{z})], \\ \sigma_\theta-\sigma_r+2i\tau_{r\theta} &= 2[\bar{z}\phi'(z)+\psi'(z)]e^{2i\theta}, \end{aligned} \tag{7}$$

where
$$\phi(z) = \varphi'(z).$$

## Hollow Cylinder specimens Loaded on its Outer Boundary

Let the point of application of external loads $Y_1$ and $Y_2$, which are equal to $P$ in this case, be $A$ and $B$. The coefficients $A_k$ will be determined from the relations:

$$A_k = \frac{1}{2\pi i}\int_\gamma \frac{f e^{-ik\theta}}{R_1^k}\,d\theta, \qquad k = \pm(1, 2, 3, \ldots n), \tag{8}$$

On the outer boundary, $f = -i\,P$, one has:

$$A'_k = -\frac{1}{2\pi i}\int_0^{2\pi}\frac{i\,P\,e^{-ik\theta}}{R_1}\,d\theta = +\frac{i\,P}{k\,R_1^k} \qquad k = \pm(1,3,5,\ldots,2k'+1,\ldots n).$$

On the inner boundary, $f=0$, one has:

$$A''_k = 0\,.$$

To increase the convergence, the two complex variable functions (4) can be taken:

$$\begin{aligned}\varphi(z) &= \frac{-i\,P}{2\pi t}\{\log(i\,R_1 - z) - \log(-i\,R_1 - z)\} + \sum_{-\infty}^{+\infty}\alpha_n z^n,\\ \psi(z) &= \frac{-i\,P}{2\pi t}\{\log(i\,R_1 - z) - \log(-i\,R_1 - z)\} + \sum_{-\infty}^{+\infty}\alpha'_n z^n.\end{aligned} \tag{9}$$

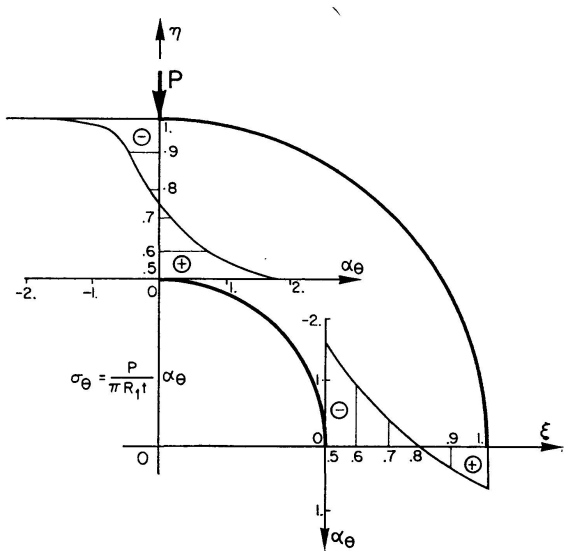


Fig. 2.

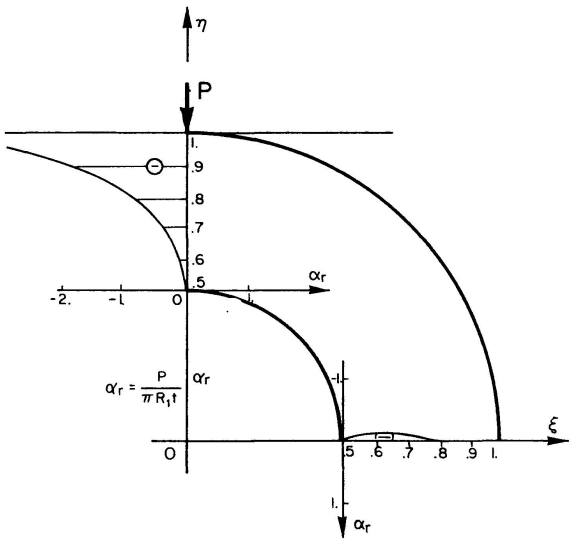


Fig. 3.

*Table I*

| $m = R_1/R_2$ | $\alpha_\theta$ at Point: ($\sigma_\theta = R_1\,t\,\alpha_\theta$) | | |
|---|---|---|---|
| | $C$ | $E$ | $F$ |
| 0.40 | 13.6891 | −13.7023 | 3.0632 |
| 0.50 | 20.3065 (19.52)*) | −17.7936 | 5.8566 |
| 0.60 | 32.7678 (33.16) | −25.6593 | 11.4105 |
| 0.70 | 60.4456 | −42.9946 | 24.4189 |
| 0.80 | 140.6816 (148.1) | −92.0971 | 64.6496 |
| 0.90 | 576.5885 (562.7) | −357.5244 | 299.6246 |

*) Number in paranthesis refers to SAVIN [10] results.

Subsequently the coefficients $\alpha_n$, $\alpha_{-n}$, $\alpha'_n$, $\alpha'_{-n}$ and the stresses are determined respectively from (1) and (7).

The stress distributions are shown in Fig. 2 and Fig. 3. The values of stresses at various points with different $m = R_1/R_2$ ratios have been given in Table I.

## Hollow Cylinder Specimens Loaded on its Inner Boundary

Let the point of application of external loads $Y_1$ and $Y_2$, which are equal to $P$, be $C$ and $D$.

The coefficients $A_k$ will be determined from the relations (8), hence on the outer boundary, $f = 0$, one has:

$$A'_k = 0$$

and on the inner boundary, $f = i\,P$, one has:

$$A''_k = \frac{1}{2\pi i}\int_0^{2\pi} \frac{i\,P\,e^{ik\theta}}{R_2^k}\,d\theta = -\frac{i\,P}{k\pi R_2^k}, \qquad k = \pm(1, 3, 5, \ldots, 2k'+1, \ldots n)$$

The two complex variable functions (4) can be taken as follows:

$$\varphi(z) = \frac{-i\,P}{2\pi t}\{\log(i\,R_2 - z) - \log(-i\,R_2 - z)\} + \sum_{-\infty}^{+\infty} \alpha_n z^n,$$

$$\psi(z) = \frac{-i\,P}{2\pi t}\{\log(i\,R_2 - z) - \log(i\,R_2 - z)\} + \sum_{-\infty}^{+\infty} \alpha'_n z^n.$$

Subsequently the coefficients $\alpha_n$, $\alpha_{-n}$, $\alpha'_n$, $\alpha'_{-n}$ and the stresses are determined respectively from (1) and (7).

The stress distributions are shown in Fig. 4 and Fig. 5. The values of stresses at various points with different $m = R_1/R_2$ ratios have been given in Table II.

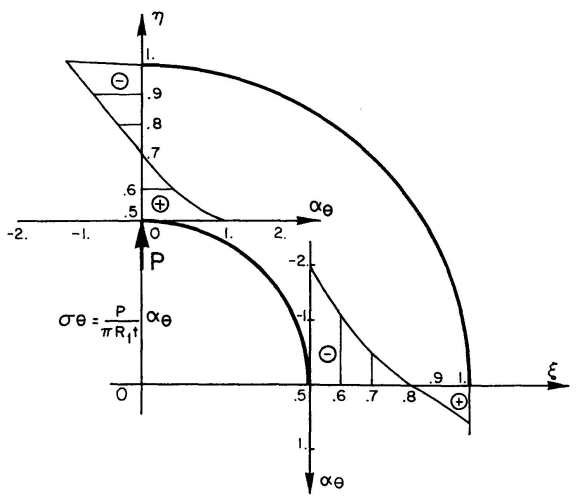


Fig. 4.

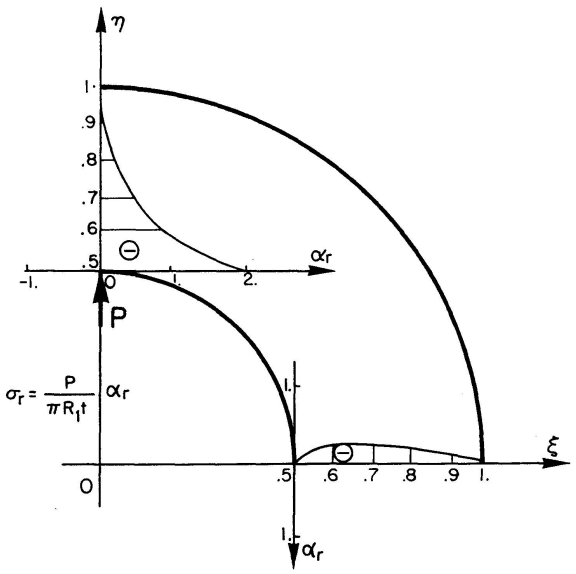


Fig. 5.

*Table II*

| $m=R_1/R_2$ | $\alpha_r$ at Point: ($\sigma_r=R_1\, t\, \alpha_r$) | | |
|---|---|---|---|
| | $A$ | $E$ | $F$ |
| 0.40 | −7.3775 | −14.5627 | 3.5761 |
| 0.50 | −12.8197 | −18.3799 | 6.2299 |
| 0.60 | −23.4063 | −26.1008 | 11.6414 |
| 0.70 | −47.8021 | −43.2316 | 24.6060 |
| 0.80 | −121.4331 | −92.2009 | 64.7898 |
| 0.90 | −537.7226 | −354.0734 | 302.9679 |

The results obtained are a measure of, but not identical with, the real axial tension. A computer program has been performed for various $m$ ratios and external loads.

## References


1. ASTM (American Society for Testing and Materials) Standards. C 496-66.
2. Timoshenko, S., and Goodier, J. N.: Theory of Elasticity. McGraw-Hill, New York, 1951, p. 107.
3. Hsu, T. C., Slate, F. O., Sturman, G. M., and Winter, G.: Microcracking of Plain Concrete and the Shape of the Stress-Strain Curve. J. ACI, Vol. 60, 1963, p. 209.
4. Hanson, J. A.: Effects of Curing and Drying Environments on Splitting Tensile Strength of Concrete. J. ACI. Vol. 65, No. 7, July 1968, p. 535.
5. Evans, R. H.: Extensibility and Modulus of Rupture of Concrete, The Structural Engineer (London), Vol. 24, No. 12, Dec. 1946, p. 636.
6. Humphreys, R.: Direct Tensile Strength of Concrete, Civil Engineering, Vol. 52, No. 8, August 1957, p. 882.
7. Blakey, F. A., and Beresford, F. C.: Tensile Strain – Part I and II, Report C 2.2-1, Division of Building Research, Commonwealth Scientific and Industrial Research Organization, Melbourn, 1953.
8. Davies, J. D., and Bose, D. K.: Stress Distribution in Splitting Tests, J. ACI, Vol. 65, No. 8, August 1968, p. 662.
9. Muskhelishvili, N. I.: Some Basic Problems of the Mathematical Theory of Elasticity. Translated from Russian by J. R. M. Radok. P. Noordhoff Ltd. Groningen. The Netherlands, 1963, p. 224.
10. Savin, G. N.: Stress Concentration Around Holes. Pergamon Press, New York, 1961, p. 142.


## Summary


The stress distributions within a hollow cylinder due to diametrically applied concentrated loads on its outer or inner boundaries has been studied by means of complex variable method assuming linear elastic behavior. The splitting tests have been considered as an application.

It is obvious that such tests do not require costly machine and they may be performed at any small construction site.

**Résumé**

Le présent article étudie par une méthode aux variables complexes, en supposant un comportement élastique linéaire, la répartition des contraintes dans un cylindre creux soumis à des forces concentrées diamétralement opposées agissant sur les bords extérieur ou intérieur.

Les essais de ruine sur les cylindres en sont présentés comme application.

Il est évident que de tels essais n'exigent pas d'appareils coûteux et qu'ils peuvent être exécutés sur n'importe quel petit chantier.

**Zusammenfassung**

Die Spannungsverteilung in einem Hohlzylinder unter diametral angeordneten Einzellasten am inneren oder äußeren Rand ist mit Hilfe komplexer Unabhängiger, angenommen der Körper verhalte sich elastisch, untersucht worden. Der Spaltversuch war dabei eine Anwendung hiervon. Offensichtlich brauchen solche Versuche keine kostspielige Maschinen und können auf irgendwelchen kleinen Bau-Plätzen durchgeführt werden.

Leere Seite
Blank page
Page vide