Zeitschrift: IABSE publications = Mémoires AIPC = IVBH Abhandlungen
Band: 19 (1959)

Artikel: On boundary conditions in the bending of thin elastic plates
Autor: Werfel, A.
DOI: https://doi.org/10.5169/seals-16961

Nutzungsbedingungen
Die ETH-Bibliothek ist die Anbieterin der digitalisierten Zeitschriften auf E-Periodica. Sie besitzt keine Urheberrechte an den Zeitschriften und ist nicht verantwortlich für deren Inhalte. Die Rechte liegen in der Regel bei den Herausgebern beziehungsweise den externen Rechteinhabern. Das Veröffentlichen von Bildern in Print- und Online-Publikationen sowie auf Social Media-Kanälen oder Webseiten ist nur mit vorheriger Genehmigung der Rechteinhaber erlaubt. Mehr erfahren

Conditions d'utilisation
L'ETH Library est le fournisseur des revues numérisées. Elle ne détient aucun droit d'auteur sur les revues et n'est pas responsable de leur contenu. En règle générale, les droits sont détenus par les éditeurs ou les détenteurs de droits externes. La reproduction d'images dans des publications imprimées ou en ligne ainsi que sur des canaux de médias sociaux ou des sites web n'est autorisée qu'avec l'accord préalable des détenteurs des droits. En savoir plus

Terms of use
The ETH Library is the provider of the digitised journals. It does not own any copyrights to the journals and is not responsible for their content. The rights usually lie with the publishers or the external rights holders. Publishing images in print and online publications, as well as on social media channels or websites, is only permitted with the prior consent of the rights holders. Find out more

Download PDF: 18.02.2026

ETH-Bibliothek Zürich, E-Periodica, https://www.e-periodica.ch

On Boundary Conditions in the Bending of Thin Elastic Plates

Sur les conditions aux limites des plaques élastiques minces fléchies

Über die Randbedingungen beim Biegen von dünnen elastischen Platten

A. WERFEL
Technion, Israel Institute of Technology, Haifa (Israel)

According to the classical theory all components of stress and strain in the bending of a thin elastic plate can be expressed in terms of the deflection $w = w(x, y)$ of its middle-surface only. This is due to the omission of the influence of the shearing forces on the deflection of the plate. The mathematical expression for this omission is the assumption, that in the first approximation one may put the strain corresponding to the shearing forces

$$\gamma_{xz} = \gamma_{xz}(x, y, z) = 0; \qquad \gamma_{yz} = \gamma_{yz}(x, y, z) = 0 \tag{1}$$

throughout the region occupied by the plate. The classical theory proved to be sufficiently exact because in most cases the shearing forces are indeed comparatively small and the assumption (1) is justified.

The solution obtained on the basis of the classical theory can be fitted along each edge only to two boundary conditions: geometrical, statical or mixed. The two conventional geometrical boundary conditions are (fig. 1a):

$$\overline{w} = \overline{w}(s) \quad \text{and} \quad \bar{\varphi}_n = -\frac{\partial \overline{w}}{\partial n} = \bar{\varphi}_n(s). \tag{2}$$

But in connection with the statical boundary conditions a contradiction inherent in the classical theory is found because three physical boundary conditions (fig. 1b):

$$\overline{V}_n(s) = V_n^*(s), \qquad \overline{H}(s) = H^*(s) \quad \text{and} \quad \overline{M}_n(s) = M_n^*(s) \tag{3}$$

exist along each edge, whereas only two statical boundary conditions can be taken into consideration. In the conditions (3) the symbols with the asterisks denote loads (shearing force, twisting moment and bending moment respectively), and the symbols with the bars — inner forces or moments appearing at the edge.

Since KIRCHHOFF this contradiction has been eluded, as known well, by prescribing for each edge instead of the three physical conditions (3) the two statical boundary conditions:

$$\overline{V}_n + \frac{\partial \overline{H}}{\partial s} = V_n^* + \frac{\partial \overline{H}}{\partial s} \quad \text{and} \quad \overline{M}_n = M_n^* . \tag{4}$$

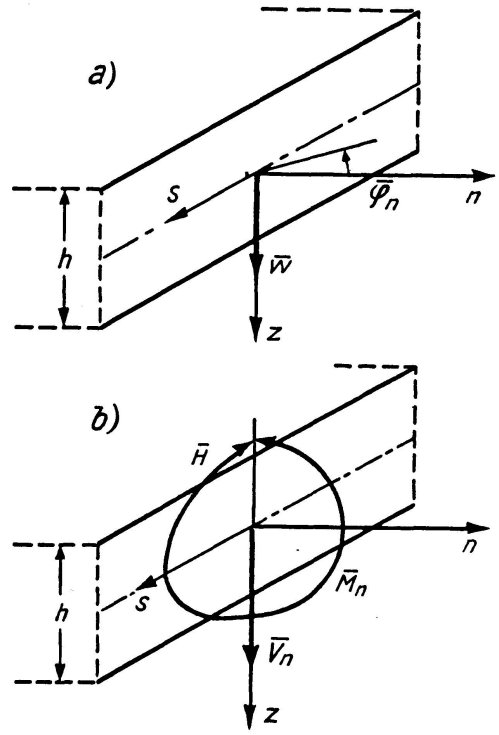

Fig. 1.

According to E. REISSNER the reduction of the boundary conditions from three to two in the classical theory is due to the omission of the contribution of the shearing forces in the expression for the strain energy of the bent plate. This theory, which considers this contribution, allows for three boundary conditions (statical, geometrical or mixed) along each edge. REISSNER's theory is doubtless more exact where the shearing forces are comparatively large and their influence on the deflection cannot be neglected. This occurs for instance in the vicinity of concentrated loads, in the neighbourhood of holes the diameter of which is of the order of magnitude of the thickness h of the plate etc. Apart from such special cases the results obtained from the classical theory may differ from those given by the much more complicated theory of REISSNER only by negligible quantities. In typical cases in which the shearing forces are comparatively small the reason for the reduction of the boundary conditions cannot therefore be due to the omission of the strains γ_{nz} and γ_{sz}, corresponding to the shearing forces.

It will be proved furtheron that a third physical boundary condition always can be added to the two boundary conditions prescribed according to

the classical theory by taking into account a perturbation of stress and strain, which starts from the edge, and vanishes at a short distance from it. This perturbation does not affect practically the deflection of the middle-surface of the plate. This is the reason why the classical theory yields good results though it does not consider this perturbation.

Considering the perturbation, the above mentioned contradiction can be eliminated, and a new physical interpretation for the first of the conditions (4) obtained. The interpretation for this boundary condition given hitherto according to THOMSON (Lord KELVIN) and TAIT is not entirely correct, as was shown once upon a time by LOVE. LOVE himself gave another interpretation which is however, essentially not different from the one he disproved, and hence not more correct. The new physical interpretation given hereafter makes both interpretations unnecessary.

The perturbation can be analysed exactly, and in a simple way in the case where $\frac{\partial^2 \overline{w}}{\partial n \partial s} = \text{const} \neq 0$. This model case gives a sufficient hint for the understanding of the general case, where $\frac{\partial^2 \overline{w}}{\partial n \partial s} \neq \text{const}$.

In order to find the perturbation of the stresses in the case $\frac{\partial^2 \overline{w}}{\partial n \partial s} = \text{const} \neq 0$, the stresses in the rectangular plate $2a \times 2b$ (fig. 2) bent to a hyperbolic paraboloid $w = -\theta x y$, where θ denotes a constant (the angle of twist), will be considered.

Using the classical theory of plates the following stresses will be found:

In the section $x = \text{const}$, including the edges $x = \pm a$

$$\tau_{xz} = 0; \qquad \tau_{xy} = \frac{6}{h^2} H \frac{2z}{h} = -\frac{12(1-\nu)}{h^3} D \theta z = 2 G \theta z; \qquad \sigma_x = 0 \tag{5a}$$

and in the section $y = \text{const}$ including the edges $y = \pm b$.

$$\tau_{yz} = 0; \qquad \tau_{yx} = \tau_{xy} = 2 G \theta z; \qquad \sigma_y = 0 \tag{6a}$$

where $G = \frac{E}{2(1+\nu)}$ denotes the shear modulus, h the thickness of the plate, and D the flexural rigidity of the plate.

Using for the same problem (fig. 2) St. Venant's theory of torsion of a bar with a rectangular cross-section $2a \times h$, the stresses

$$\tau_{xz} = 0; \qquad \tau_{xy} = 2 G \theta z - G \theta h \frac{8}{\pi^2} \sum_{m=0}^{\infty} \frac{(-1)^m}{(2m+1)^2} \cosh^{-1} \frac{(2m+1)\pi a}{h} \cdot$$
$$\cdot \cosh \frac{(2m+1)\pi x}{h} \sin \frac{(2m+1)\pi z}{h}; \qquad \sigma_x = 0 \tag{5b}$$

appear in the sections $x = \text{const.}$ which yields for the edges $x = \pm a$

$$\tau_{xz} = 0; \qquad \tau_{xy} = 0; \qquad \sigma_x = 0.$$

In the sections $y = \text{const}$ including the edges $y = \pm b$, act

$$\tau_{yz} = -G\theta\frac{8}{\pi^2}\sum_{m=0}^{\infty}\frac{(-1)^m}{(2m+1)^2}\cosh^{-1}\frac{(2m+1)\pi a}{h}\sinh\frac{(2m+1)\pi x}{h}\cos\frac{(2m+1)\pi z}{h},$$

$$\tau_{yx} = 2G\theta z - \frac{8}{\pi^2}\sum_{m=0}^{\infty}\frac{(-1)^m}{(2m+1)^2}\cosh^{-1}\frac{(2m+1)\pi a}{h}\cosh\frac{(2m+1)\pi x}{h}\cdot \tag{6b}$$

$$\cdot\sin\frac{(2m+1)\pi z}{h},$$

$$\sigma_y = 0.$$

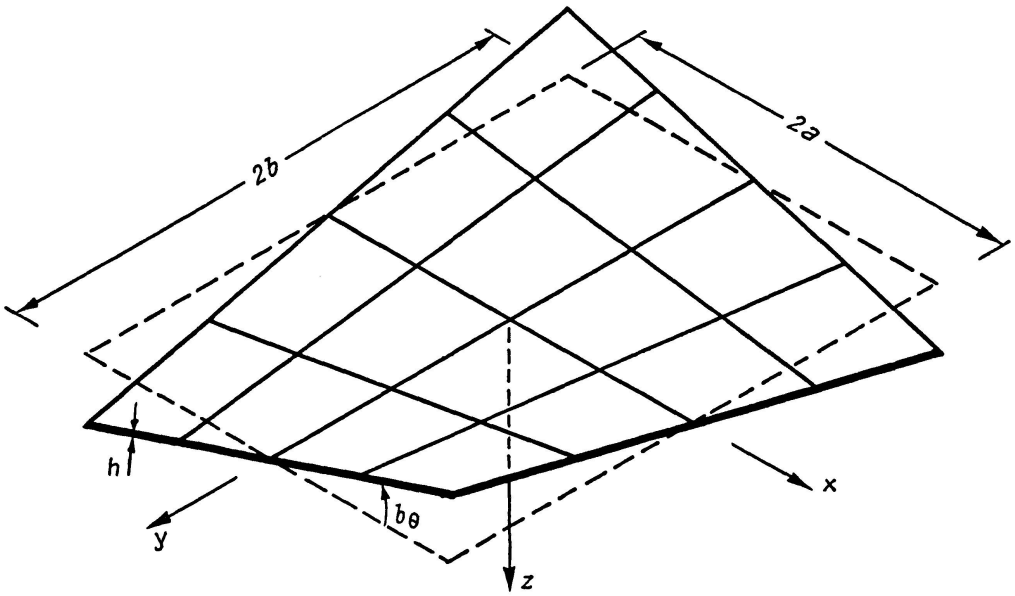

Fig. 2.

Comparing the expressions (5) and (6), it can be stated that the stresses corresponding to St. Venant's theory can be obtained from the theory of plates by adding the perturbations:

$$\hat{\tau}_{xy} = \hat{\tau}_{yx} = -G\theta h\frac{8}{\pi^2}\sum_{m=0}^{\infty}\frac{(-1)^m}{(2m+1)^2}\cosh^{-1}\frac{(2m+1)\pi a}{h}\cdot$$

$$\cdot\cosh\frac{(2m+1)\pi x}{h}\sin\frac{(2m+1)\pi z}{h},$$

$$\hat{\tau}_{yz} = \hat{\tau}_{zy} = -G\theta h\frac{8}{\pi^2}\sum_{m=0}^{\infty}\frac{(-1)^m}{(2m+1)^2}\cosh^{-1}\frac{(2m+1)\pi a}{h}\cdot \tag{7}$$

$$\cdot\sinh\frac{(2m+1)\pi x}{h}\cos\frac{(2m+1)\pi z}{h},$$

which start at the edges $x = \pm a$ with the values $\hat{\tau}_{xy}(x = \pm a) = \hat{\tau}_{yx}(x = \pm a) = -2G\theta z$ and

$$\hat{\tau}_{yz} = \hat{\tau}_{zy} = -G\theta h\frac{8}{\pi^2}\sum_{m=0}^{\infty}\frac{(-1)^m}{(2m+1)^2}\tanh\frac{(2m+1)\pi a}{h}\cos\frac{(2m+1)\pi z}{h}.$$

Remembering that for thin plates the ratio a/h is comparatively large it may be concluded that the perturbation starting at one edge does practically not interfere with that, starting at the opposite edge. Hence each of the edges $x = \pm a$ can be considered independently. Introducing for the edge $x = a$, the coordinates $n = x - a$, $s = y$, $z = z$ (fig. 1), and putting

$$G\theta h = -\frac{6(1-\nu)D}{h^2}\frac{\partial^2 \overline{w}}{\partial n\,\partial s} \quad \text{it will be obtained from (7)}$$

$$\begin{aligned}
\hat{\tau}_{ns} = \hat{\tau}_{sn} &= \frac{48(1-\nu)D}{\pi^2 h^2}\frac{\partial^2 \overline{w}}{\partial n\,\partial s}\sum_{m=0}^{\infty}\frac{(-1)^m}{(2m+1)^2}\sin\frac{(2m+1)\pi z}{h}\exp\frac{(2m+1)\pi n}{h},\\
\hat{\tau}_{sz} = \hat{\tau}_{zs} &= \frac{48(1-\nu)D}{\pi^2 h^2}\frac{\partial^2 \overline{w}}{\partial n\,\partial s}\sum_{m=0}^{\infty}\frac{(-1)^m}{(2m+1)^2}\cos\frac{(2m+1)\pi z}{h}\exp\frac{(2m+1)\pi n}{h}.
\end{aligned} \tag{8}$$

The stresses $\hat{\tau}_{ns}$ at the edge $(n = 0)$ yield the twisting moment

$$\hat{H} = (1-\nu)D\frac{\partial^2 \overline{w}}{\partial n\,\partial s} = -\overline{H}. \tag{9}$$

The variation of the additional stresses with z for $n = 0$ is illustrated in (fig. 3) in terms of

$$\hat{\tau}_{sn\,max} = \hat{\tau}_{sn}\left(n = 0, z = \frac{h}{2}\right) = \frac{6(1-\nu)D}{h^2}\frac{\partial^2 \overline{w}}{\partial n\,\partial s} = \frac{6}{h^2}\hat{H}.$$

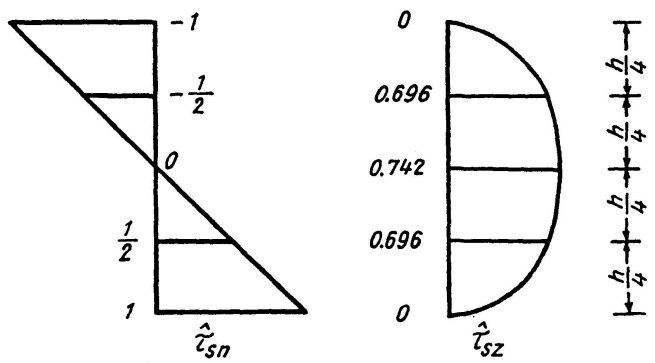

Fig. 3.

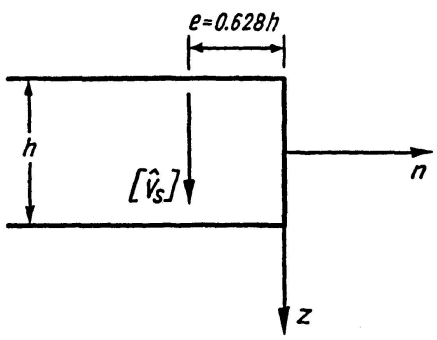

Fig. 4.

The width c of the edge strip affected by the perturbation does not exceed practically twice the thickness of the plate because the extreme values of $\hat{\tau}_{sn}$ and $\hat{\tau}_{sz}$ become for $n < -2h$ less than $0{,}0015\left(\frac{6}{h^2}\hat{H}\right)$. The resultant of the stresses $\hat{\tau}_{sn}$ and $\hat{\tau}_{sz}$ appearing in the section $s = \text{const}$ can be obtained by integration. It amounts to

$$[\hat{V}_s] = \hat{H} = -\overline{H} = (1-\nu)D\frac{\partial^2 \overline{w}}{\partial n\,\partial s}, \tag{10}$$

and acts (fig. 4) at the distance $e = 0{,}628\,h$ inwards from the edge. Its sign is the same as for the shearing force V_s acting in the sections $s = \text{const}$.

It shall be emphasized that the shearing stresses $\hat{\tau}_{sz}$ and their resultant $[\hat{V}_s]$, which are quite independent from the deflection of the plate, cannot be identified with those shearing stresses τ_{sz}, which are by means of their resultant i. e. the shearing force V_s connected with the deflection of the plate. The shearing stresses $\hat{\tau}_{sz}$ (fig. 3) do not vary with z, according to a parabola of second degree as assumed for the shearing stresses τ_{sz}.

By superposition of the perturbation on the stresses corresponding to the classical theory of plates the outer twisting moment $H^* = \bar{H} + \hat{H} = \bar{H} - \bar{H}$ vanishes. This is accompanied by the appearing of the force $[\hat{V}_s]$ according to (10) and fig. 4, and by the appearing along the edge and in its nearest neighbourhood of the shearing strain $\hat{\gamma}_{sz} = \hat{\gamma}_{sz}(z) = \frac{\hat{\tau}_{sz}}{G} \neq 0$, according to (8), but in contrariety to (1). The deflection w of the middle surface is, as seen, not affected at all by the vanishing of the twisting moment along the edge, and the shearing strain $\hat{\gamma}_{sz}$ is not due to shearing forces.

Along each edge of the plate, bent to a hyperbolic paraboloid the extreme conditions: $\hat{\gamma}_{sz} = \hat{\gamma}_{sz}(z) = 0$ or $H^* = 0$, can therefore be prescribed alternatively. The first of these conditions means that there is no perturbation at this edge because the distortion in the $(s-z)$-plane of the filaments which are initially straight and normal to the surface, is prevented by the external twisting moment $H^* = \bar{H} = -(1-\nu) D \frac{\partial^2 \bar{w}}{\partial n \partial s} = (1-\nu) D \theta$. The second alternative i. e. $H^* = 0$, states that along the edge the perturbation with all its consequences exists.

If for the edge $x = a$ (fig. 2) e. g. $H^* = 0$ will be prescribed whereas along the other edges the $\hat{\gamma}_{sz}$ equals zero, the latter edges will be subjected to twisting moments $H^* = (1-\nu) D \theta$. Due to the perturbation starting along the edge $x = a$ at the edges $y = \pm b$, in addition to H^* the forces $[\hat{V}_s] = -\bar{H} = -(1-\nu) D \theta$ act at the points $x = a - 0{,}628\, h$. The edge $x = a$ will be then free from stresses. In the case where H^* vanishes along all edges (fig. 2), two forces $[\hat{V}_s]$ act near each corner which yield resultants $\hat{A} = \pm 2 [\hat{V}_s] = \mp 2 (1-\nu) D \theta$ at the points $x = \pm (a - 0{,}314\, h)$, $y = \pm (b - 0{,}314\, h)$.

A triangular part of the plate bounded by two edges meeting at a corner, and by an arbitrary section has to satisfy the conditions of equilibrium. Regarding forces acting in the z-direction equilibrium exists between the force $\hat{A}$ and the resultants of the shearing stresses, which appear in the section near both edges due to the perturbations. Whithout taking into consideration of these shearing stresses it is impossible to satisfy this condition of equilibrium because in the particular case $w = -\theta x y$ (fig. 2), the shearing forces defined by the theory of bending of plates equal zero in all sections.

Nádai who examined this case experimentally applied the forces $\hat{A}$ exactly at the corners of the plate as stipulated by the interpretation of Thomson and Tait. This is the main reason why the deflections measured by him are a little too large in comparison with the theoretical values.

Apart from the two extreme cases, namely complete constraint (i. e. $\hat{\gamma}_{sz}=0$) and no constraint (i. e. $H^*=0$), there are edges which are partly constrained as regards the shearing strain $\hat{\gamma}_{sz}=\frac{\hat{\tau}_{sz}}{G}$. In such cases only a suitable part of the perturbation (8) shall be used.

So far only the particular case $\frac{\partial^2 \overline{w}}{\partial n \partial s}=\text{const} \neq 0$ has been considered, and the exact solution for the perturbation found. Now the general case where $\frac{\partial^2 \overline{w}}{\partial n \partial s} \neq \text{const}$ along the edge will be analyzed. The statement $\hat{\gamma}_{sz}=0$ for an edge means, as before, that the elements of the edge strip are in identical conditions as the elements inside the plate. Accordingly, if $\frac{\partial^2 \overline{w}}{\partial n \partial s} \neq 0$, the external twisting moment $H^*=\overline{H}=-(1-\nu) D \frac{\partial^2 \overline{w}}{\partial n \partial s}$ is due to act.

Innumerable experiments and measurements of the deformation of plates in cases where $\frac{\partial^2 \overline{w}}{\partial n \partial s} \neq \text{const}$, and no external twisting moments acting along the edges prove that the classical theory is sufficiently exact. This means, that the vanishing of the external twisting moment must be accompanied by a perturbation starting at the edge along which $\frac{\partial^2 \overline{w}}{\partial n \partial s} \neq 0$, and vanishing near it, and that this perturbation does not practically affect the deflection of the middle-surface. Hence the perturbation in the general case must be similar to the one described previously. It cannot be identical with the perturbation defined by eq. (8), because among other reasons St. Venant's theory of torsion does not hold any more for a varying angle of twist.

The boundary conditions for thin plates can be established without the knowledge of the laws according to which $\hat{\tau}_{sn}$ and $\hat{\tau}_{sz}$ vary since for this purpose it is sufficient to examine the conditions of equilibrium of the element $h \times c \times ds$ (fig. 5) of the edge strip.

In connection with this, only the stresses due to the perturbation will be considered, assuming that their resultant $[\hat{V}_s]$ acts at a not exactly known yet

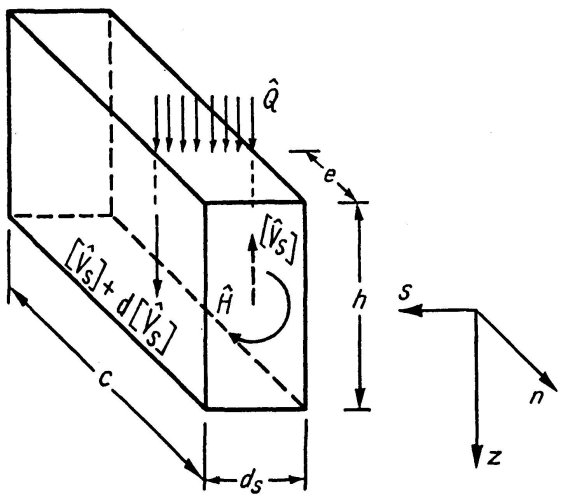

Fig. 5.

short distance e from the edge, and that the section $n = -c$ is free from stresses. From the condition concerning the rotation about the n-axis it follows: $[\hat{V}_s]\,ds - \hat{H}\,ds = 0$, and hence

$$[\hat{V}_s] = \hat{H}(s) = -\bar{H}(s) = (1-\nu)\,D\frac{\partial^2 \bar{w}}{\partial n\,\partial s}. \tag{11}$$

Accordingly there acts in the section $s = \text{const}$ the force $[\hat{V}_s]$, and in the section $(s + ds)$ the force $[\hat{V}_s] + d[\hat{V}_s]$.

The condition concerning the displacement in the z-direction stipulates the action of a line load $\hat{Q}$ (fig. 5): $\hat{Q}\,ds + d[\hat{V}_s] = 0$, and hence

$$\hat{Q} = \hat{Q}(s) = -\frac{d[\hat{V}_s]}{ds} = -\frac{d\hat{H}}{ds} = \frac{d\bar{H}}{ds} = -(1-\nu)\,D\frac{\partial^3 \bar{w}}{\partial n\,\partial s^2}. \tag{12}$$

The existence or vanishing of the line load $\hat{Q}$ implies the case $\frac{\partial^2 \bar{w}}{\partial n\,\partial s} \neq \text{const}$ and the cases $\frac{\partial^2 \bar{w}}{\partial n\,\partial s} = \text{const.}$ respectively. Accordingly when $\frac{\partial^2 \bar{w}}{\partial n\,\partial s} \neq \text{const}$ and $H^* = 0$, the transversal line load R^* (fig. 6a) has to be the resultant of the external shearing force $V_n^* = \bar{V} = -D\left(\frac{\partial^3 \bar{w}}{\partial n^3} + \frac{\partial^3 \bar{w}}{\partial n\,\partial s^2}\right)$, and the line load $\hat{Q}$ acting at a distance e from the edge.

$$R^* = \bar{V}_n + \frac{\partial \bar{H}}{\partial s} = -D\left[\frac{\partial^3 w}{\partial n^3} + (2-\nu)\frac{\partial^3 w}{\partial n\,\partial s^2}\right]. \tag{13}$$

Along a free edge the perturbation is due to start and hence the following boundary conditions shall be prescribed:

$$R^* = \bar{V}_n + \frac{\partial \bar{H}}{\partial s} = 0, \qquad H^* = 0 \quad \text{and} \quad M_n^* = \bar{M}_n = 0. \tag{14}$$

Since $\hat{Q}$ does not act upon the plane $n = 0$, some secondary stresses (chiefly bending stresses in the sections $n = \text{const}$) are due to appear.

If the edge is simply supported and $\frac{\partial^2 \bar{w}}{\partial n\,\partial s} \neq \text{const}$, the following conditions for the extreme two cases can be prescribed:

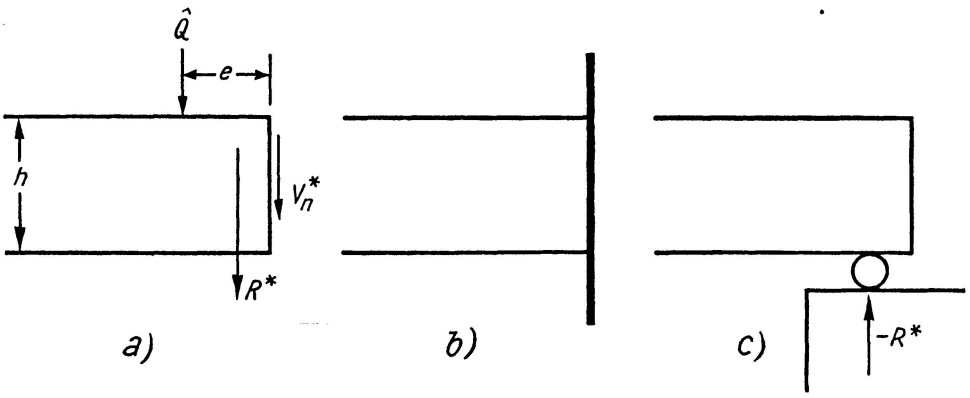

Fig. 6.

$$\overline{w} = 0, \quad \hat{\gamma}_{sz} = 0 \quad \text{and} \quad M_n^* = \overline{M}_n = 0 \tag{15a}$$

or

$$\overline{w} = 0, \quad H^* = 0 \quad \text{and} \quad M_n^* = \overline{M}_n = 0. \tag{15b}$$

The first alternative is realized when the edge is connected with a membrane (fig. 6b), perfectly rigid in its plane, and perfectly flexible transversally. Due to the rigidity of the membrane in its plane $\hat{\gamma}_{sz} = 0$ results. Hence the membrane acts on the plate with the shearing force, and $V_n^* = \overline{V}_n$, and with the twisting moment $H^* = \overline{H}$. This means that in this case no forces $\hat{A}$ will act near the corners of the plate. On the contrary, if according to (15b) the external twisting moment H^* vanishes, the forces $\hat{A}$ near the corner exist.

Generally an edge as represented in (fig. 6c) is called simply supported. In this case not only M_n^* and H^* vanish but also $V_n^* = 0$ along the edge. This induces another perturbation which also affects the width of the edge-strip.

Generally the external tractions induced in the edge vary, as exemplified in the last instance in a quite different manner than assumed by the theory. It would therefore be very difficult to assess theoretically which stresses appear in the edge-strip and how they vary. An exact analysis of the stress and the strain in the edge-strip due only to the vanishing of the external twisting moment H^* would be therefore of no practical importance.

In the particular case where $\frac{\partial^2 \overline{w}}{\partial n \partial s}$ equals zero along the edge, the following results simultaneously: $\hat{\gamma}_{sz} = 0$ and $H^* = \overline{H} = 0$. This is the reason why the three physical boundary conditions reduce then automatically to two.

References

1. A. E. H. Love, "A treatise on the mathematical theory of elasticity", 4th ed. Cambridge University Press, Cambridge 1927, pp. 27—29, 458—463.
2. Eric Reissner, "On bending of elastic plates", J. Math. Phys. **23**, 184—191 (1944); J. Appl. Mech. **12**, 68—77 (1945); Quart. Appl. Math. *5*, 55—68 (1947).
3. A. E. Green, "On Reissner's theory of bending of elastic plates", Quart. Appl. Math. **7**, 223—228 (1949).
4. A. E. Green and W. Zerna, "Theoretical elasticity", Clarendon Press, Oxford 1954, pp. 224—229.
5. A. Nádai, "Elastische Platten", Springer Verlag, Berlin 1925, pp. 39—45.

Summary

Using the classical (i. e. Kirchhoff's) theory of bending of thin elastic plates a third physical boundary condition can always be added to the two boundary conditions conventionally prescribed along each edge. This third boundary condition is derived from a perturbation of stress and strain which starts at the edge and vanishes at a short distance from it. This perturbation has no

noticeable influence on the deflection of the plate. Taking into consideration this perturbation the contradiction inherent in the classical theory in connection with the boundary conditions can be eliminated, and a new physical interpretation for KIRCHHOFF's boundary condition is obtained.

Résumé

Lorsque l'on utilise la théorie classique (KIRCHHOFF) des plaques élastiques minces fléchies, il est toujours possible de considérer une troisième condition marginale physique en plus des deux conditions marginales conventionnelles. Cette condition supplémentaire provient d'une perturbation du régime de contrainte et de déformation, perturbation qui part du bord et disparaît à une petite distance de lui. Cette perturbation marginal n'exerce aucune influence notable sur le fléchissement de la dalle. En la faisant intervenir, il est possible d'éliminer la contradiction, inhérente à la théorie classique, au sujet des conditions marginales. On peut ainsi obtenir une nouvelle explicitation physique pour la condition marginale de KIRCHHOFF.

Zusammenfassung

Bei Anwendung der klassischen (d. i. der KIRCHHOFFschen) Theorie für die Biegung von dünnen elastischen Platten kann immer den zwei konventionellen Randbedingungen eine dritte physikalische Randbedingung hinzugefügt werden. Diese zusätzliche Randbedingung stammt von einer Störung des Spannungs- und Formänderungszustandes, die vom Rand ausgeht und in einer kleinen Entfernung von ihm verschwindet. Die Randstörung hat keinen merklichen Einfluß auf die Durchbiegung der Platte. Durch Beachtung dieser Randstörung kann der der klassischen Theorie inherente und sich auf die Randbedingungen beziehende Widerspruch beseitigt werden und wird eine neue, physikalische Erklärung für die KIRCHHOFFsche Randbedingung erhalten.