Zeitschrift: IABSE publications = Mémoires AIPC = IVBH Abhandlungen
Band: 19 (1959)

Artikel: Deformation of ring girders stiffening thin shells of rotation
Autor: Oravas, Gunhard-Aestius
DOI: https://doi.org/10.5169/seals-16959

Nutzungsbedingungen
Die ETH-Bibliothek ist die Anbieterin der digitalisierten Zeitschriften auf E-Periodica. Sie besitzt keine Urheberrechte an den Zeitschriften und ist nicht verantwortlich für deren Inhalte. Die Rechte liegen in der Regel bei den Herausgebern beziehungsweise den externen Rechteinhabern. Das Veröffentlichen von Bildern in Print- und Online-Publikationen sowie auf Social Media-Kanälen oder Webseiten ist nur mit vorheriger Genehmigung der Rechteinhaber erlaubt. Mehr erfahren

Conditions d'utilisation
L'ETH Library est le fournisseur des revues numérisées. Elle ne détient aucun droit d'auteur sur les revues et n'est pas responsable de leur contenu. En règle générale, les droits sont détenus par les éditeurs ou les détenteurs de droits externes. La reproduction d'images dans des publications imprimées ou en ligne ainsi que sur des canaux de médias sociaux ou des sites web n'est autorisée qu'avec l'accord préalable des détenteurs des droits. En savoir plus

Terms of use
The ETH Library is the provider of the digitised journals. It does not own any copyrights to the journals and is not responsible for their content. The rights usually lie with the publishers or the external rights holders. Publishing images in print and online publications, as well as on social media channels or websites, is only permitted with the prior consent of the rights holders. Find out more

Download PDF: 18.02.2026

ETH-Bibliothek Zürich, E-Periodica, https://www.e-periodica.ch

Deformation of Ring Girders Stiffening Thin Shells of Rotation

Déformation des poutres annulaires renforçant des voiles de révolution

Deformation von dünne Rotationsschalen aussteifenden Ringträgern

GUNHARD-AESTIUS ORAVAS
B.S.C.E., M.S.C.E., M.S.E.M., Ph. D. Ass't. Prof. of Engineering Mechanics, McMaster University, Hamilton, Ontario, Canada

Synopsis

This paper presents an integrated treatment of ring girders in connection with the analysis of thin shells of rotation. An example illustrates the analysis of a ring girder which acts as an edge stiffener to a spherical shell with variable thickness.

Introduction

A few papers[1]) have been published on the analysis of rotational thin shells stiffened by ring girders. Usually the papers dealing with ring girders introduce certain simplifying assumptions into the analysis which tend to limit their scope of application to a large radius to width ratio.

An attempt is made here to present the whole subject matter pertaining to elastic ring girders in a self contained manner and devoid of such restrictions.

Ring girder in a rotationally symmetrical state of stress undergoes a radially symmetrical rolling around a concentric stationary circular axis and additional radially symmetrical displacements. These basic components of deformation of ring girders are treated independently of each other and superimposed in the analysis to achieve the final configuration of the composite structure. The assumption is made that the cross section of ring girder undergoes no change in its plane brought about by radially symmetrical displacements and radial rolling.

---

[1]) See [1], [2], [4] and [5] in Bibliography.

Rotationally Symmetrical Rolling of Ring Girders

General Theory for Arbitrary Cross Section

The radius vector of a point "A_1" in the cross section of a ring girder (fig. 1) can be represented by a radius vector

$$\vec{r} = \bar{x}\vec{i} + \bar{y}\vec{j} = (R_x + \zeta\cos\phi)\vec{i} + (R_y + \zeta\sin\phi)\vec{j}.$$

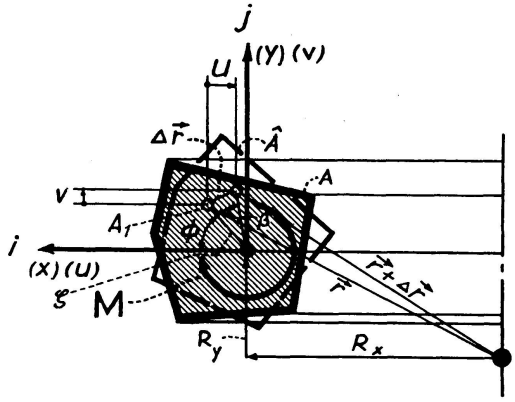

Fig. 1. Ring Girder of Arbitrary Cross Section.

When the ring girder undergoes a finite radial rolling β about a concentric circular axis with radius $\vec{R} = R_x\vec{i} + R_y\vec{j}$, then the radius vector of point "A_1" becomes

$$\vec{r} + \Delta\vec{r} = [R_x + \zeta\cos(\phi+\beta)]\,\vec{i} + [R_y + \zeta\sin(\phi+\beta)]\,\vec{j}.$$

Consequently the change in radius vector is

$$\Delta\vec{r} = (\vec{r} + \Delta\vec{r}) - \vec{r} = \zeta[\cos\phi(\cos\beta - 1) - \sin\phi\sin\beta]\,\vec{i} + \\ + \zeta[\sin\phi(\cos\beta - 1) + \cos\phi\sin\beta]\,\vec{j}.$$

The change in radius vector $\vec{r}$ consists of two orthogonal finite displacements

$$\Delta\vec{r} = (u)\vec{i} + (v)\vec{j},$$

where

$$u = x(\cos\beta - 1) - y(\sin\beta),$$
$$v = x(\sin\beta) + y(\cos\beta - 1).$$

For rotationally symmetrical stress-strain state the circumferential strain is given by

$$\epsilon_\theta = \frac{u}{r} = \frac{x(\cos\beta - 1) - y(\sin\beta)}{R_x + x}$$

and the circumferential stress by

$$\sigma_\theta = E\,\epsilon_\theta = E\left[\frac{x(\cos\beta - 1) - y(\sin\beta)}{R_x + x}\right]$$

for point "A_1"

If it is assumed that the initial state of ring girder is stress free, then the equilibrium of ring girder requires

$$\int_{\hat{A}} E\,\epsilon_\theta\,d\,A = \int_{\hat{A}} \sigma_\theta\,d\,A = E\left\{\int_{\hat{A}} \frac{x}{R_x+x}(\cos\beta-1)\,d\,A - \int_{\hat{A}} \frac{y}{R_x+x}(\sin\beta)\,d\,A\right\} = 0,$$

where the integration is carried over the rolled position of the cross section.

This condition is satisfied for all "β" when

$$\int_{\hat{A}} \frac{x}{R_x+x}\,d\,A = 0, \tag{a}$$

$$\int_{\hat{A}} \frac{y}{R_x+x}\,d\,A = 0. \tag{b}$$

The circumferential stress couple becomes

$$M_\theta = \int_{\hat{A}} \sigma_\theta\,\zeta\sin(\phi+\beta)\,d\,A = \int_{\hat{A}} \sigma_\theta\,[y\cos\beta + x\sin\beta]\,d\,A\,.$$

The radial component of the circumferential stress couple is

$$\mathbf{M}|_{d\theta} = M_\theta\,d\,\theta = \int_{\hat{A}} \sigma_\theta\,[y\cos\beta + x\sin\beta]\,d\,A\,d\,\theta\,.$$

Equilibrium of stress couples in the radial plane requires

$$\left(\frac{2\,\pi\,\hat{r}\,\hat{M}}{2\,\pi}\right)d\,\theta - M_\theta\,d\,\theta = 0$$

or

$$\hat{M} = \frac{1}{\hat{r}}M_\theta = \frac{1}{\hat{r}}\int_{\hat{A}} \sigma_\theta\,[y\cos\beta + x\sin\beta]\,d\,A =$$

$$= \frac{E}{\hat{r}}\int_{\hat{A}} \frac{x\,y\,[\cos\beta\,(\cos\beta-1) - \sin^2\beta] - y^2\sin\beta\cos\beta + x^2\,[\sin\beta\,(\cos\beta-1)]}{R_x+x}\,d\,A\,.$$

If the stress couple $\hat{M}$ is a sum

$$\hat{M} = M_\phi + \sum_{k=1} V_k\,e_k + \sum_{j=1} H_j\,e_j\,,$$

where M_ϕ is a distributed stress couple per unit length of a circle of radius r_m and V_n, V_s, H_m, H_r are distributed stress resultants per unit length of a circle of radius r_n, r_s, r_m and r_r. The lever arms of the force couples are designated by e_n, e_s, e_m, e_n. Then the circumferential stress couple acting in the ring girder is (fig. 2)

$$M_\theta = M_\phi\,r_M + \sum_{k=1} (V_k\,e_k)\,r_k + \sum_{j=1} (H_j\,e_j)\,r_j\,.$$

In the structural analysis of shells only very small angle changes "β" are considered, therefore the stress couple and rotation are simplified in the following expressions

$$\hat{M} = \frac{E\beta}{\hat{r}} \int \frac{y^2}{R_x + x} dA$$

or

$$E\beta = \frac{\hat{r}\hat{M}}{\int\limits_{\hat{A}} \frac{y^2}{R_x + x} dA}, \tag{c}$$

because

$$\cos\beta \approx 1, \qquad \sin\beta \approx \beta, \qquad \beta^2 \approx 0.$$

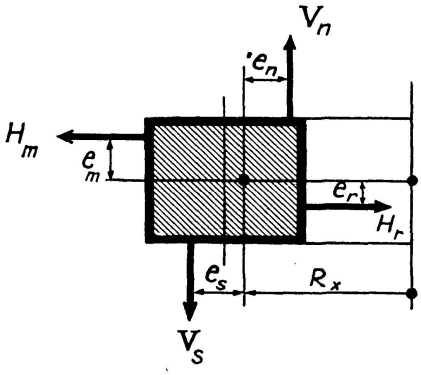

Fig. 2. Ring Girder Subjected to Boundary Forces.

The integration was carried over the stress free position of the cross section.

Integrals (a) and (b) can now be written

$$\int\limits_A \frac{x}{R_x + x} dA = 0, \quad \text{(a)} \qquad \int\limits_A \frac{y}{R_x + x} dA = 0. \quad \text{(b)}$$

For sections symmetrical about a normal plane to the axis of rotation ($R_y = 0$) integral (b) is automatically satisfied.

The location of the circular axis, about which the ring girder rolls, is determined by integral (a).

Rectangular Cross Section

For a rectangular section (fig. 3)

$$\int\limits_{-(R_x - r_i)}^{(r_0 - R_x)} \int\limits_{-d/2}^{d/2} \frac{x}{R_x + x} dx\, dy = y \Big]_{-d/2}^{d/2} \mathrm{Ln}\,(R_x + x) \Big]_{-(R_x - r_i)}^{(r_0 - R_x)} = 0$$

or

$$R_x = \frac{r_0 - r_i}{\mathrm{Ln}\left(\frac{r_0}{r_i}\right)}.$$

Then by (c)
$$E\beta = \frac{12\hat{r}}{d^3 \operatorname{Ln}\left(\frac{r_0}{r_i}\right)} \hat{M}.$$

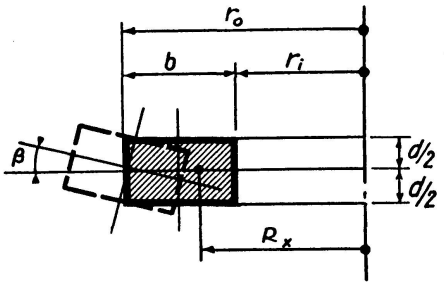

Fig. 3. Ring Girder of Rectangular Cross Section.

Trapezoidal Cross Section

For trapezoidal section (fig. 4) (a) yields
$$R_x = \left[\frac{(d_0 - k r_i) + \frac{k}{2}(r_0 + r_i)}{\operatorname{Ln}(\alpha^{(d_0 - k r_i)}) - k(r_0 - r_i)}\right](r_0 - r_i)$$
and by (c)
$$E\beta = \left[\frac{24\hat{r}}{(d_0 + k r_i)^3 \operatorname{Ln}\left(\frac{1}{\alpha}\right) + \frac{3}{2}k^2(d_0 + k r_i)(r_0^2 - r_i^2) + 3k(d_0 + k r_i)^2(r_0 - r_i) + \frac{k^3}{3}(r_0^3 - r_i^3)}\right]\hat{M},$$
where
$$\alpha = \frac{r_i}{r_0}.$$

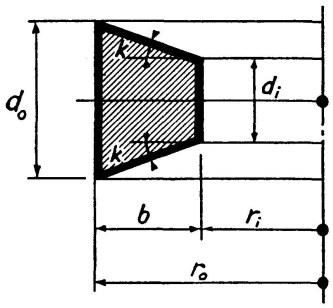

Fig. 4. Ring Girder of Trapezoidal Section.

Rotationally Symmetrical Radial Displacement of Ring Girder

Formulation of Differential Equation for Ring Girder with Constant Thickness

The equilibrium condition of the ring girder against a radially symmetrical displacement is [5, 6]
$$\frac{dN_r}{dr} + \frac{N_r - N_\theta}{r} = 0,$$
where N_r and N_θ designate the radial and circumferential stress resultants acting on the ring girder respectively.

The radial and ring strains for rotationally symmetrical deformation are

$$\epsilon_r = \frac{du}{dr}, \qquad \epsilon_\theta = \frac{u}{r},$$

where "u" denotes radial displacement.

Compatibility relation is obtainable from the two strain relations in the form

$$\frac{d\epsilon_\theta}{dr} + \frac{\epsilon_\theta - \epsilon_r}{r} = 0.$$

Substituting the well known stress resultant-strain relations

$$\epsilon_r = \frac{1}{Ed}[N_r - \nu N_\theta], \qquad \epsilon_\theta = \frac{1}{Ed}[N_\theta - \nu N_r],$$

(where ν designates Poisson's ratio and d is the constant thickness of the girder),

in compatibility equation yields the fundamental differential equation [6]

$$r\frac{dN_\theta}{dr} - \nu r\frac{dN_r}{dr} + (1+\nu)[N_\theta - N_r] = 0.$$

Combining the equilibrium and compatibility equations into a single differential equation containing one dependent variable gives

$$r\frac{d^2N_r}{dr^2} + 3\frac{dN_r}{dr} = 0.$$

Introducing $\hat{N} = \frac{dN_r}{dr}$ and $r = e^z$ into this differential equation transforms it into

$$(D+2)\hat{N} = 0,$$

where

$$D \equiv \frac{d}{dr}.$$

Solution of this equation is

$$\hat{N} = A\,e^{-2z} = \frac{A}{r^2}.$$

Then

$$N_r = -\frac{2}{r^2}A + B$$

and

$$N_\theta = \frac{2}{r^2}A + B,$$

where A and B are integration constants.

Radial strain becomes

$$\epsilon_\theta = \frac{u}{r} = \frac{1}{Ed}\left[\frac{2(1+\nu)}{r^2}A + (1-\nu)B\right].$$

Radial Boundary Reaction H_0

In this case the boundary conditions are (fig. 5)

$$\text{at } r = r_0: \quad N_r = H_0,$$

and

$$\text{at } r = r_i: \quad N_r = 0.$$

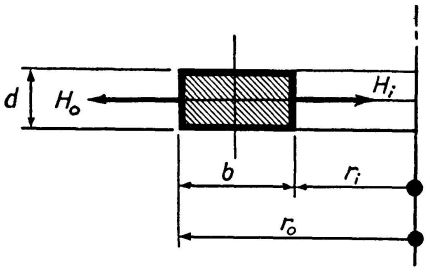

Fig. 5. Ring Girder Subjected to Boundary Reactions.

Then the integration constants become

$$A = H_0\left\{\frac{1}{2}\frac{r_0^2 r_i^2}{(r_0^2 - r_i^2)}\right\}, \qquad B = H_0\left\{\frac{r_0^2}{r_0^2 - r_i^2}\right\}.$$

Using these expressions the radial and circumferential stress resultant distributions are described by

$$N_r = H_0\frac{r_0^2}{(r_0^2 - r_i^2)}\left[1 - \left(\frac{r_i}{r}\right)^2\right], \qquad N_\theta = H_0\frac{r_0^2}{(r_0^2 - r_i^2)}\left[1 + \left(\frac{r_i}{r}\right)^2\right],$$

and the circumferential strain at $r = r_0$ is

$$\epsilon_\theta = \frac{u}{r_0} = H_0\left\{\frac{1}{E\,d}\frac{(1+\nu)\,\alpha^2 + (1-\nu)}{(1-\alpha^2)}\right\},$$

where

$$\alpha = \frac{r_i}{r_0}.$$

Radial Boundary Reaction H_i

Under this loading the boundary conditions are (fig. 5)

$$\text{at } r = r_i: \quad N_r = H_i$$

and

$$\text{at } r = r_0: \quad N_r = 0.$$

Integration constants are given for this case by

$$A = H_i\left\{-\frac{1}{2}\frac{r_i^2 r_0^2}{r_0^2 - r_i^2}\right\}, \qquad B = H_i\left\{-\frac{r_i^2}{(r_0^2 - r_i^2)}\right\}.$$

Then radial and circumferential stress resultant distributions are expressed by

$$N_r = H_i\left\{-\frac{r_i^2}{(r_0^2 - r_i^2)}\left[1 - \left(\frac{r_0}{r}\right)^2\right]\right\}, \qquad N_\theta = H_i\left\{-\frac{r_i^2}{(r_0^2 - r_i^2)}\left[1 + \left(\frac{r_0}{r}\right)^2\right]\right\}$$

and the circumferential strain at $r = r_i$ is

$$\epsilon_\theta = \frac{u}{r_i} = H_i \left\{ -\frac{1}{E\,d} \left[\frac{(1+\nu)+(1-\nu)\,\alpha^2}{(1-\alpha^2)} \right] \right\}.$$

Formulation of Differential Equation for Ring Girder with Variable Thickness

For ring girder with variable thickness the stress resultants N_ϕ and N_θ are also functions of its thickness, hence the stress resultants can be expressed by [6]

$$\bar{N}_r = N_r(y,r) \quad \text{and} \quad \bar{N}_\theta = N_\theta(y,r).$$

Then the pertinent equilibrium equation takes on the form

$$r\frac{d}{dr}(\bar{N}_r) + \bar{N}_r - \bar{N}_\theta = 0$$

or

$$\frac{d}{dr}(r\,\bar{N}_r) - \bar{N}_\theta = 0.$$

Substitution of function $\psi = \bar{N}_r r$ into the equilibrium equation gives

$$\frac{d\psi}{dr} = \bar{N}_\theta.$$

The compatibility relation in terms of stress function yields

$$r^2\frac{d^2\psi}{dr^2} + r\frac{d\psi}{dr} - \psi - \frac{r}{d}\frac{d}{dr}\left[d\left(r\frac{d\psi}{dr} - \nu\psi\right)\right] = 0.$$

For a linearly varying girder thickness given by $d = D_1, r$ the compatibility relation is

$$r^2\frac{d^2\psi}{dr^2} - (1-\nu)\,\psi = 0$$

and for $d = D_{-1}\,r^{-1}$

$$r^2\frac{d^2\psi}{dr^2} + 2\,r\frac{d\psi}{dr} - (1+\nu)\,\psi = 0.$$

Both of these equations are equidimensional. Substituting a new independent variable $Ln\,(r) = z$ into this differential equation transforms it into

$$\frac{d^2\psi}{dz^2} - \frac{d\psi}{dz} - (1-\nu)\psi = 0.$$

The solution of the two differential equations is obviously

$$\psi = A\,e^{m_1 z} + B\,e^{m_2 z}$$

or

$$\psi = A\,r^{m_1} + B\,r^{m_2},$$

where for $d = D_{-1}\,r^{-1}$

$$\left.\begin{matrix} m_1 \\ m_2 \end{matrix}\right\} = \frac{1}{2} \pm \sqrt{(1-\nu)+\frac{1}{4}}.$$

Then the exponential constant for $d = D_1$, r is given by

$$\left.\begin{matrix} m_1 \\ m_2 \end{matrix}\right\} = -\frac{1}{4} \pm \sqrt{(1+\nu)+\frac{1}{4}}.$$

Stress resultants in this case are

$$\bar{N}_r = A\, r^{m_1-1} + B\, r^{m_2-1}$$

and

$$\bar{N}_\theta = A\, m_1\, r^{m_1-1} + B\, m_2\, r^{m_2-1}.$$

Circumferential strain becomes

$$\epsilon_\theta = \frac{u}{r} = \frac{1}{E\,d}[\bar{N}_\theta - \nu\,\bar{N}_r] = \frac{1}{E\,d}[A\,(m_1-\nu)\,r^{m_1-1} + B\,(m_2-1)\,r^{m_2-1}].$$

Radial Boundary Reaction H_0

The boundary conditions for this boundary loading are

$$\text{at } r = r_0\text{:} \quad \bar{N}_r = H_0$$

and

$$\text{at } r = r_i\text{:} \quad \bar{N}_r = 0.$$

Constants of integration satisfying the prescribed boundary conditions are

$$A = H_0\left[-\frac{r_i^{(m_2-m_1)}}{r_0^{(m_2-1)} - r_0^{(m_1-1)}\, r_i^{(m_2-m_1)}}\right], \qquad B = H_0\left[\frac{1}{r_0^{(m_2-1)} - r_0^{(m_1-1)}\, r_i^{(m_2-m_1)}}\right].$$

Then the circumferential strain is expressed by

$$\epsilon_\theta = H_0\left\{\frac{1}{E\,d}\,\frac{(m_2-1)\,r^{(m_2-1)} - (m_1-\nu)\,r_i^{(m_2-m_1)}\,r^{(m_1-1)}}{r_0^{(m_2-1)} - r_0^{(m_1-1)}\,r_i^{(m_2-m_1)}}\right\},$$

hence at $r = r_0$

$$\epsilon_\theta = H_0\left\{\frac{1}{E\,d_0}\,\frac{(m_2-1)\,\gamma - (m_1-\nu)\,r_i^{(m_2-m_1)}}{\gamma - r_i^{(m_2-m_1)}}\right\}, \qquad \left(\gamma = \frac{r_0^{(m_2-1)}}{r_0^{(m_1-1)}}\right).$$

Distribution of circumferential stress resultant can be extracted from

$$\bar{N}_\theta = H_0\left[\frac{m_2\,r^{(m_2-1)} - r_i^{(m_2-m_1)}\,r^{(m_1-1)}\,m_1}{r_0^{(m_2-1)} - r_i^{(m_2-m_1)}\,r_0^{(m_1-1)}}\right].$$

Radial Boundary Reaction H_i

Boundary conditions for inside boundary loading are

$$\text{at } r = r_0\text{:} \quad \bar{N}_r = 0$$

and

$$\text{at } r = r_i\text{:} \quad \bar{N}_r = H_i.$$

Integration constants, corresponding to these boundary conditions, are given by

$$A = H_i \left[- \frac{r_0^{(m_2-m_1)}}{r_i^{(m_2-1)} - r_0^{(m_2-m_1)} r_i^{(m_1-1)}} \right], \qquad B = H_i \left[\frac{1}{r^{(m_2-1)} - r_0^{(m_2-m_1)} r_i^{(m_1-1)}} \right].$$

Circumferential strain becomes

$$\epsilon_\theta = H_i \left[\frac{1}{E\,d} \frac{(m_2-1)\, r^{(m_2-1)} - (m_1-\nu)\, r_0^{(m_2-m_1)}\, r^{(m_1-1)}}{r_i^{(m_2-1)} - r_0^{(m_2-m_1)}\, r_i^{(m_1-1)}} \right].$$

At $r = r_i$ the circumferential strain is

$$\epsilon_\theta = H_i \left[\frac{1}{E\,d_i} \frac{(m_2-1)\,\omega - (m_1-\nu)\, r_0^{(m_2-m_1)}}{\omega - r_0^{(m_2-m_1)}} \right],$$

where

$$\omega = \frac{r_i^{(m_2-1)}}{r_i^{(m_1-1)}}.$$

The distribution of circumferential stress resultant over the width of the ring girder is

$$\bar{N}_\theta = H_i \left[\frac{m_2\, r^{(m_2-1)} - m_1\, r_0^{(m_2-m_1)}\, r^{(m_1-1)}}{r_i^{(m_2-1)} - r_0^{(m_2-m_1)}\, r_i^{(m_1-1)}} \right].$$

Non-Linear Variation of Ring Girder Thickness

For a girder whose depth is given by a function

$$d = D_n r^n, \qquad (n = \pm 2, \pm 3 \ldots),$$

the exponential constants are

$$\left.\begin{matrix} m_1 \\ m_2 \end{matrix}\right\} = -\frac{|n|}{2} \pm \sqrt{\frac{|n|^2}{4} + (1 + \nu\,|n|)}$$

for negative "n" and

$$\left.\begin{matrix} m_1 \\ m_2 \end{matrix}\right\} = \frac{|n|}{2} \pm \sqrt{\frac{|n|^2}{4} + (1 - \nu\,|n|)}$$

for positive "n"

Application

As an illustration for the subject matter developed in this paper an analysis of a ring girder, that supports a superstructure and acts as an edge stiffener for a central small opening in a hemispherical shell of variable thickness (fig. 6), is carried out in considerable detail.

Solution applicable for very thin shells is given in the following parametric form [3]:

$$\beta = \left(\frac{h_0}{h}\right)^{5/4} \sin^{-1/2}\phi\,[(A_0\,e^{\mu\Phi} + B_0\,e^{-\mu\Phi})\cos\mu\Phi + (B_1\,e^{-\mu\Phi} - A_1\,e^{\mu\Phi})\sin\mu\Phi],$$

$$H = \frac{E\,(h_0)^{5/4}\,(h)^{3/4}}{m\,a\sin^{3/2}\Phi}[(A_1\,e^{\mu\Phi} + B_1\,e^{-\mu\Phi})\cos\mu\Phi + (A_0\,e^{\mu\Phi} - B_0\,e^{-\mu\Phi})\sin\mu\Phi] +$$

$$+ \frac{\cot\phi}{a\sin\phi}(r\,V),$$

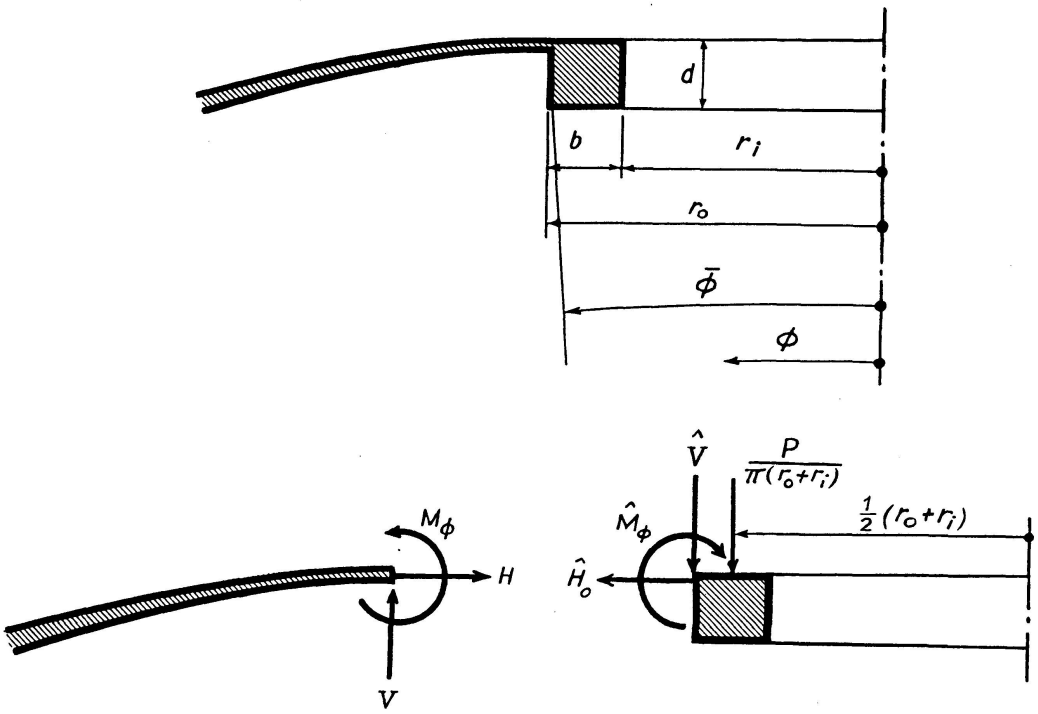

Fig. 6. Central Opening in the Hemispherical Shell of Variable Thickness with an Exploded Section Showing Stress Resultants, Stress Couples and Applied Forces Acting between the Shell and the Ring Girder.

where

β — tangential rotation, negative with increasing "ϕ",

H — horizontal reaction,

h_0 — thickness of shell at some reference section (here $\phi = 0$),

$$\mu\Phi = \sqrt{\frac{m\,a}{2\,h_0}}\int\sqrt{\frac{h_0}{h}}\,d\phi,$$

$$m = \sqrt{12\,(1-\nu^2)},$$

E = Young's modulus.

Other fundamental quantities are given by the following relations (fig. 7): where

$$
\begin{aligned}
r\,V &= -a^2 \int p_v \sin\phi\, d\phi\,,\\
N_\theta &= \frac{d}{d\phi}(\sin\phi\, H) + a \sin\phi\, p_H\,,\\
N_\phi &= H\cos\phi + \sin\phi\, V\,,\\
Q &= -\sin\phi\, H + \cos\phi\, V\,,\\
M_\phi &= \frac{D}{a}\left(\frac{d\beta}{d\phi} + (\nu\cot\phi)\,\beta\right),\\
M_\theta &= \frac{D}{a}\left((\cot\phi)\,\beta + \nu\frac{d\beta}{d\phi}\right),\\
\epsilon_\theta &= \frac{u}{r} = \frac{1}{E\,h}(N_\theta - \nu N_\phi) = \frac{1}{E\,h}\left[(1-\nu)\cos\phi\, H + \sin\phi\frac{dH}{d\phi} - \frac{\nu}{a} r\, V\right],\\
w &= \int\left[\frac{a\sin\phi}{E\,h}(N_\phi - \nu N_\theta) - (a\cos\phi)\,\beta\right] d\phi\,,
\end{aligned}
$$

where $D = \dfrac{E\,h^3}{12\,(1-\nu^2)}$,

ν — Poisson's ratio,

r — horizontal radius of middle surface of the shell,

and a — radius of the shell's middle surface.

For a hemi-spherical shell with the following properties

$$
\begin{aligned}
h &= h_0\, e^{-\delta\phi} = (\tfrac{1}{4})\, e^{-0.441}\ \text{ft.}\,,\\
a &= 44\ \text{ft.}\,,\\
\bar{\phi} &= 10\ \text{deg.}\,,\\
r\,V &= -\frac{P}{2\pi} = \frac{10}{2\pi}\,,\\
\mu\Phi &= 78.30\,(1 - e^{-0.220\,\phi})
\end{aligned}
$$

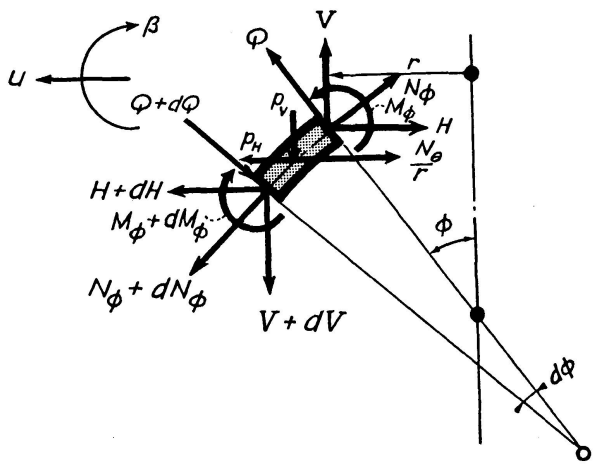

Fig. 7. Meridional Section of the Differential Element of Rotational Shell.

the circumferential strain and meridional rotation are

$$\epsilon_{\theta s} = (0.0153)\, B_0 + (0.0161)\, B_1 + \frac{9.56}{E}$$

and

$$\beta_s = (-0.118)\, B_0 + (0.0279)\, B_1 .$$

In these relations only that part of the solution was used which contains the negative exponential function. This is permissible for thin shells because the effect of their boundary disturbance decays rapidly with the distance from the shell's edge and for an apex opening that part of the solution which decreases with increasing "ϕ" is appropriate.

Finally the shells meridional stress couple is

$$M_\phi = \frac{D}{a} \frac{e^{-5/4\,\delta\phi}}{\sqrt{\sin\phi}} e^{-\mu\Phi} \{B_0 [(\hat{a} + \nu \cot\phi) \cos\mu\Phi - \hat{b} \sin\mu\Phi] + \\ + B_1 [\hat{b} \cos\mu\Phi + (\hat{a} + \nu\cot\phi) \sin\mu\Phi]\},$$

where

$$\hat{a} = -\left(\frac{\cot\phi}{2} + \frac{5}{4}\delta + e^{-\frac{1}{2}\delta\phi}\sqrt{\frac{m\,a}{2\,h_0}}\right),$$

$$\hat{b} = e^{-\frac{1}{2}\delta\phi}\sqrt{\frac{m\,a}{2\,h_0}}.$$

A central ring girder has the following dimensions:

$$\begin{aligned} b &= 1.67 \text{ ft.}, \\ d &= 6 \text{ in.} = 0.5 \text{ ft.}, \\ e &= 0.125 \text{ ft.}, \\ r_i &= 6 \text{ ft.}, \\ r_0 &= 7.67 \text{ ft.} \end{aligned}$$

The total load of superstructure and ring girder is

$$P = 10 \text{ kips.}$$

Then

$$\begin{aligned} R_x &= 6.8 \text{ ft.}, \\ E\,\beta_{RG} &= (3080)\,\hat{M}_\phi - (385)\,\hat{H}_0 - (2560)\,\hat{V}, \\ E\,\epsilon_{\theta RG} &= -(385)\,\hat{M}_\phi + (56.3)\,\hat{H}_0 + (319)\,\hat{V}, \end{aligned}$$

where

$$\hat{M}_\phi = \mathbf{M} = M_\phi - H\,e - V\frac{b}{2}.$$

The following boundary conditions have to be satisfied at $\phi = \bar{\phi}$:

Statical:

$$\begin{cases} H = \hat{H}_0, \\ V = \hat{V}, \\ M_\phi = \hat{M}_\phi, \end{cases}$$

Geometrical:

$$\begin{cases} \beta_S = \beta_{RG}, \\ \epsilon_{\theta S} = \epsilon_{\theta RG}. \end{cases}$$

Substituting
$$M_\phi = E(10^{-4})\{(0.723)\,B_0 - (0.965)\,B_1\},$$
$$H = -E(10^{-3})\{(1.120)\,B_1 + (0.265)\,B_0\} - 1.174$$
and
$$\mathbf{M} = M_\phi - He - V\frac{b}{2}$$

into the ring girder relations yields

$$\beta_{RG} = [(0.325)\,B_0 - (0.134)\,B_1] + \frac{544.2}{E},$$

$$\epsilon_{\theta RG} = -[(0.091)\,B_0 + (0.026)\,B_1] - \frac{77.7}{E}.$$

The geometrical boundary conditions yield two equations

$$B_0 + (0.40)\,B_1 = -\frac{823}{E}, \qquad B_0 - (0.55)\,B_1 = -\frac{1833}{E}.$$

The solution for the two unknown coefficients is

$$B_0 = -\frac{1.25}{E}(10^3), \qquad B_1 = \frac{1.06}{E}(10^3).$$

With these coefficients the redundants are

$$H = -0.79 \text{ k./ft.},$$
$$M_\phi = -0.19 \text{ ft. k./ft.}$$

Then the ring girder radial rolling moment is expressed by

$$M = 0.094 \text{ ft. k./ft.}$$

along the circular rolling axis measured by R_x

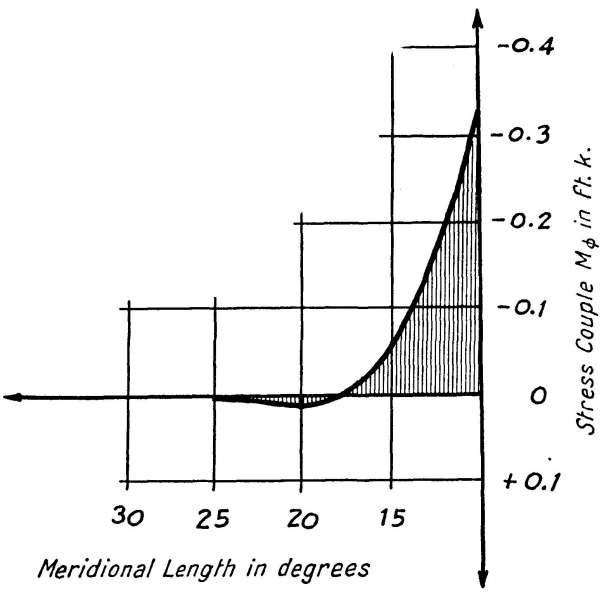

Fig. 8. Distribution of Stress Couple M_ϕ along the Meridian.

and the total circumferential stress couple by

$$\int_{r_i}^{r_0} M_\theta \, dr = \mathbf{M} \, R_x = 0.094 \times 6.80 = 0.639 \text{ ft./k.}$$

Total circumferential stress resultant is

$$\int_{r_i}^{r_0} N_\theta \, dr = H_0 r_0 = -6.05 \text{ k.}$$

Distribution of the circumferential stress resultant over the width of the ring girder is described by

$$N_\theta = -2.04 \left[1 + \left(\frac{r_i}{r} \right)^2 \right] \text{k./ft.}$$

Finally the meridional stress couple M_ϕ acting in the shell is illustrated in fig. 8. The rapidly decreasing nature of M_ϕ with meridional distance from the ring girder is plainly evident.

Bibliography

1. Girkman, K., "Flächentragwerke", Springer-Verlag, Vienna, 4th Ed., 1956.
2. Huddleston, J. V. and Salvadori, M. G., "Dead-Load and Live-Load Moments in Shells of Revolution Built-in into Cylinders", Proc. Paper No. 772, A. S. C. E. Eng. Mech. Div., V. 81, Aug. 1955.
3. Naghdi, P. M. and De Silva, N., "On the Deformation of Elastic Shells of Revolution", Quart. Appl. Math., V. 12, No. 4, 1955, pp. 369—374.
4. Oravas, G., "Analysis of Collar Slabs for Shells of Revolution", Proc. Paper No. 916, A. S. C. E., St 2, V. 82, March 1956.
5. Timoshenko, S., "Strength of Materials", Part II, D. Van Nostrand, New York, 1941.
6. Timoshenko, S., "Theory of Elasticity", McGraw-Hill, New York, 1934.

Summary

In this short presentation the ring girder analysis is applied to the elastostatic calculation of stiffened thin shells of rotation.

Ring girders with rectangular and trapezoidal cross sections are investigated in detail and formulas have been worked out for their immediate application in thin shell analysis.

An illustrative example is finally given for a ring girder acting as an edge stiffener for a small central opening of a thin spherical shell with variable thickness.

Résumé

Dans cette courte étude, l'auteur applique l'analyse de la poutre annulaire au calcul élasto-statique des voiles de révolution renforcés.

Il étudie en outre d'une manière détaillée les poutres annulaires de section rectangulaire et de section trapézoïdale; il établit des formules pour l'application directe à l'étude des voiles.

Enfin, il donne un exemple d'application à une poutre annulaire jouant le rôle de renforcement de bordure pour une petite ouverture centrale dans un voile sphérique d'épaisseur variable.

Zusammenfassung

In dieser kurzen Abhandlung wird die Analyse des Ringträgers bei der elasto-statischen Berechnung von dünnen, ausgesteiften Rotationsschalen verwendet.

Weiterhin werden Ringträger mit Rechteck- und Trapezquerschnitt im Detail untersucht, und es werden Formeln abgeleitet für die direkte Anwendung bei der Untersuchung von dünnen Schalen.

Zuletzt ist noch ein Anwendungsbeispiel mit einem Ringträger gegeben, der als Randversteifung bei einer kleinen, zentralliegenden Öffnung einer dünnen, sphärischen Schale mit variabler Stärke, wirkt.