Zeitschrift: IABSE publications = Mémoires AIPC = IVBH Abhandlungen
Band: 19 (1959)

Artikel: Bending of partially loaded simply supported cylindrical shells
Autor: Lee, S.E.
DOI: https://doi.org/10.5169/seals-16955

Nutzungsbedingungen
Die ETH-Bibliothek ist die Anbieterin der digitalisierten Zeitschriften auf E-Periodica. Sie besitzt keine Urheberrechte an den Zeitschriften und ist nicht verantwortlich für deren Inhalte. Die Rechte liegen in der Regel bei den Herausgebern beziehungsweise den externen Rechteinhabern. Das Veröffentlichen von Bildern in Print- und Online-Publikationen sowie auf Social Media-Kanälen oder Webseiten ist nur mit vorheriger Genehmigung der Rechteinhaber erlaubt. Mehr erfahren

Conditions d'utilisation
L'ETH Library est le fournisseur des revues numérisées. Elle ne détient aucun droit d'auteur sur les revues et n'est pas responsable de leur contenu. En règle générale, les droits sont détenus par les éditeurs ou les détenteurs de droits externes. La reproduction d'images dans des publications imprimées ou en ligne ainsi que sur des canaux de médias sociaux ou des sites web n'est autorisée qu'avec l'accord préalable des détenteurs des droits. En savoir plus

Terms of use
The ETH Library is the provider of the digitised journals. It does not own any copyrights to the journals and is not responsible for their content. The rights usually lie with the publishers or the external rights holders. Publishing images in print and online publications, as well as on social media channels or websites, is only permitted with the prior consent of the rights holders. Find out more

Download PDF: 18.02.2026

ETH-Bibliothek Zürich, E-Periodica, https://www.e-periodica.ch

Bending of Partially Loaded Simply Supported Cylindrical Shells

Flexion des voiles cylindriques simplement appuyés et partiellement chargés

Biegung von teilweise belasteten, einfach gelagerten Zylinderschalen

S. L. LEE
Ph. D., Associate Professor of Civil Engineering, Northwestern University,
Evanston, Illinois, U.S.A.

Introduction

It can be shown [1]) that the equilibrium equations for the bending of cylindrical shells may be written in the form

$$\begin{aligned} T'_x + S^\circ - \xi r &= 0 \\ T^\circ_\varphi + S' - N_\varphi - \tau r &= 0 \\ T_\varphi + N^\circ_\varphi + N'_x - \rho r &= 0 \\ M^\circ_\varphi + M'_t - N_\varphi r &= 0 \\ M'_x + M^\circ_t - N_x r &= 0 \end{aligned} \tag{1}$$

in which T_x and T_φ are the normal forces per unit length of the transverse section and the longitudinal section respectively; S and M_t the tangential shearing force and the torsional moment per unit length of the sections respectively; M_x and M_φ the bending moments per unit length of the transverse section and the longitudinal section respectively; N_x and N_φ the radial shearing forces per unit length of the transverse section and the longitudinal section respectively; ξ, τ and ρ the longitudinal, the transverse and the radial load components per unit area of the shell surface respectively. The positive directions of the coordinate axes are shown in fig. 1 and those of the forces in fig. 2. In (1), the symbol (°) denotes differentiation with respect to φ and the

---

[1]) See for instance [1], p. 114. Numbers in brackets refer to the listing of references at the end of the paper.

symbol (′) differentiation with respect to z which is related to x by the relationship $z = x/r$, r being the radius of the cylindrical shell. For example,

$$T_x' = \frac{\partial T_x}{\partial z} = r\frac{\partial T_x}{\partial x}, \qquad S^\circ = \frac{\partial S}{\partial \varphi}.$$

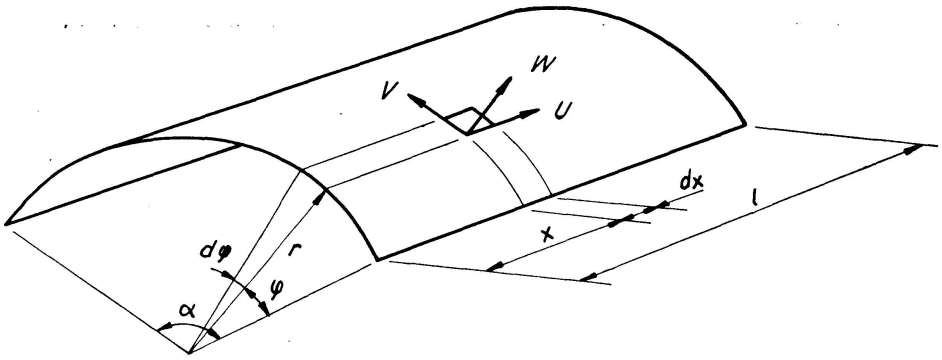

Fig. 1.

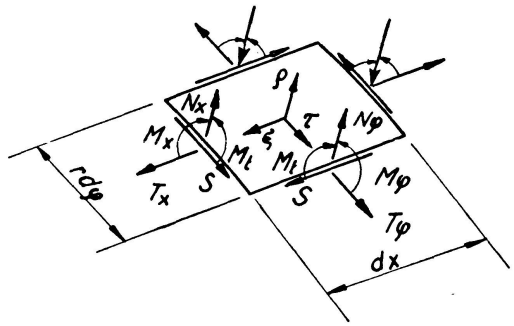

Fig. 2.

Solving for N_φ and N_x in (1d, e) yields

$$N_\varphi = \frac{1}{r}(M_\varphi^\circ + M_t'), \qquad N_x = \frac{1}{r}(M_x' + M_t^\circ) \tag{2}$$

and substituting (2) in (1b, c) leads to

$$T_\varphi^\circ + S' - \frac{1}{r}(M_\varphi^\circ + M_t') - \tau r = 0, \qquad T_\varphi + \frac{1}{r}(M_\varphi^{\circ\circ} + 2M_t^{\circ\prime} + M_x'') - \rho r = 0. \tag{3}$$

The forces may be expressed in terms of the displacement components u, v and w as follows:

$$\begin{aligned}
T_x &= \frac{Et}{r(1-\mu^2)}[u' + \mu(v^\circ + w)],\\
T_\varphi &= \frac{Et}{r(1-\mu^2)}(v^\circ + w + \mu u'),\\
S &= \frac{Et}{2r(1+\mu)}(v' + u^\circ),\\
M_x &= \frac{Et^3}{12r^2(1-\mu^2)}[w'' + \mu(w^{\circ\circ} - v^\circ)],
\end{aligned} \tag{4}$$

$$
\begin{aligned}
M_\varphi &= \frac{E t^3}{12 r^2 (1-\mu^2)} (w^{\circ\circ} - v^\circ + \mu w''), \\
M_t &= \frac{E t^3}{12 r^2 (1+\mu)} (w^{\circ\prime} - v'),
\end{aligned} \tag{4}
$$

in which E is the modulus of elasticity, t the thickness of the shell and μ denotes Poisson's ratio. The positive directions of u, v and w are shown in fig. 1. Since μ has only small effect on the stress distribution, particularly in the case of reinforced concrete shells, it will be assumed as zero to simplify the solution; although its retention presents no fundamental difficulty other than longer and more cumbersome expressions. Thus setting $\mu = 0$ in (4) leads to

$$
\begin{aligned}
T_x &= \frac{E t}{r} u', & M_x &= \frac{E t^3}{12 r^2} w'', \\
T_\varphi &= \frac{E t}{r} (v^\circ + w), & M_\varphi &= \frac{E t^3}{12 r^2} (w^{\circ\circ} - v^\circ), \\
S &= \frac{E t}{2 r} (v' + u^\circ), & M_t &= \frac{E t^3}{12 r^2} (w^{\circ\prime} - v').
\end{aligned} \tag{5}
$$

Substituting (5) in (1a) and (3) and introducing

$$
\beta = \frac{t^2}{12 r^2} \tag{6}
$$

lead to

$$
\begin{aligned}
& u'' + \frac{u^{\circ\circ}}{2} + \frac{v^{\circ\prime}}{2} - X = 0, \\
& (1+\beta) v^{\circ\circ} + (\tfrac{1}{2}+\beta) v'' + \frac{u^{\circ\prime}}{2} + w^\circ - \beta (w^{\circ\circ\circ} + w^{\circ\prime\prime}) - Y = 0, \\
& v^\circ + w + \beta (w^{\circ\circ\circ\circ} + 2 w^{\circ\circ\prime\prime} + w^{\prime\prime\prime\prime} - v^{\circ\circ\circ} - 2 v^{\circ\prime\prime}) - Z = 0,
\end{aligned} \tag{7}
$$

in which

$$
X = \frac{r^2}{E t} \xi, \qquad Y = \frac{r^2}{E t} \tau, \qquad Z = \frac{r^2}{E t} \rho. \tag{8}
$$

Eliminating u and v in (7) leads to the eigth-order differential equation

$$
\begin{aligned}
& w^{\circ\circ\circ\circ} + 3 w^{\circ\circ\prime\prime} + \frac{1}{\beta}(1+2\beta) w^{\prime\prime\prime\prime} + 2 w^{\circ\circ\circ\circ\circ\circ} + 7 w^{\circ\circ\circ\circ\circ\circ\prime\prime} + 6 w^{\circ\circ\prime\prime\prime\prime} \\
& \quad + w^{\circ\circ\circ\circ\circ\circ\circ\circ} + 4 w^{\circ\circ\circ\circ\circ\circ\circ\prime\prime} + (6+\beta) w^{\circ\circ\circ\circ\prime\prime\prime\prime} + (4+3\beta) w^{\circ\circ\prime\prime\prime\prime\prime\prime} \\
& \quad + (1+2\beta) w^{\prime\prime\prime\prime\prime\prime\prime\prime} - \frac{1}{\beta} X^{\circ\circ\prime} + X^{\circ\circ\circ\circ\circ\prime} + 2 X^{\circ\circ\prime\prime\prime} + \frac{1}{\beta} Y^{\circ\circ\circ} + \frac{2}{\beta} Y^{\circ\prime\prime} \\
& \quad - Y^{\circ\circ\circ\circ\circ} - 4 Y^{\circ\circ\circ\prime\prime} - 4 Y^{\circ\prime\prime\prime\prime} - \frac{1}{\beta}(1+\beta) Z^{\circ\circ\circ\circ} - \frac{1}{\beta}(2+3\beta) Z^{\circ\circ\prime\prime} \\
& \quad - \frac{1}{\beta}(1+2\beta) Z^{\prime\prime\prime\prime} = 0.
\end{aligned} \tag{9}
$$

Since β is very small compared to unity[2]), the elimination of this term from the quantities in parentheses in (9) will not, for practical purposes, alter the values of the coefficients. Thus (9) may be simplified into the form

$$\begin{aligned} & w^{\circ\circ\circ\circ} + 3\,w^{\circ\circ\prime\prime} + \frac{1}{\beta} w^{\prime\prime\prime\prime} + 2\,w^{\circ\circ\circ\circ\circ\circ} + 7\,w^{\circ\circ\circ\circ\prime\prime} + 6\,w^{\circ\circ\prime\prime\prime\prime} \\ & \quad + w^{\circ\circ\circ\circ\circ\circ\circ\circ} + 4\,w^{\circ\circ\circ\circ\circ\circ\prime\prime} + 6\,w^{\circ\circ\circ\circ\prime\prime\prime\prime} + 4\,w^{\circ\circ\prime\prime\prime\prime\prime\prime} + w^{\prime\prime\prime\prime\prime\prime\prime\prime} \\ & \quad - \frac{1}{\beta} X^{\circ\circ\prime} + X^{\circ\circ\circ\circ\prime} + 2\,X^{\circ\circ\prime\prime\prime} + \frac{1}{\beta} Y^{\circ\circ\circ} + \frac{2}{\beta} Y^{\circ\prime\prime} - Y^{\circ\circ\circ\circ\circ} \\ & \quad - 4\,Y^{\circ\circ\circ\prime\prime} - 4\,Y^{\circ\prime\prime\prime\prime} - \frac{1}{\beta} Z^{\circ\circ\circ\circ} - \frac{2}{\beta} Z^{\circ\circ\prime\prime} - \frac{1}{\beta} Z^{\prime\prime\prime\prime} = 0 . \end{aligned} \tag{10}$$

In the following, a solution of (10) in explicit form will be presented.

Cylindrical Shells Simply Supported along Transverse and Longitudinal Edges

For a cylindrical shell simply supported along the transverse and the longitudinal edges (fig. 3), a solution satisfying (10) and the boundary conditions can be obtained by taking u, v, w, X, Y and Z in the forms of the double trigonometric series[3])

$$\begin{aligned} u &= \sum\sum u_{mn} \cos\lambda z \sin\eta\varphi , \\ v &= \sum\sum v_{mn} \sin\lambda z \cos\eta\varphi , \\ w &= \sum\sum w_{mn} \sin\lambda z \sin\eta\varphi , \\ X &= \sum\sum X_{mn} \cos\lambda z \sin\eta\varphi , \\ Y &= \sum\sum Y_{mn} \sin\lambda z \cos\eta\varphi , \\ Z &= \sum\sum Z_{mn} \sin\lambda z \sin\eta\varphi , \end{aligned} \tag{11}$$

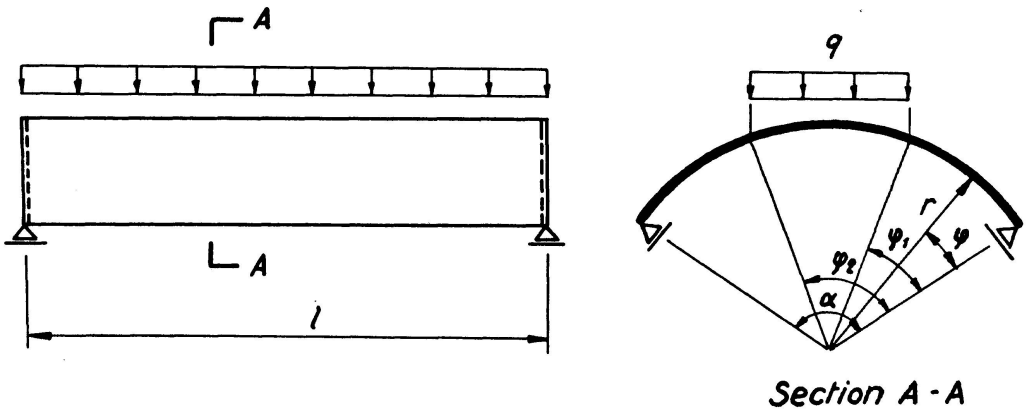

Fig. 3.

[2]) The value of β is usually less than 0.00001 in reinforced concrete shells.

[3]) The series (11a, b, c, f) were used by TIMOSHENKO [2] in a case with uniformly distributed radial load extending over the entire shell. The solution, however, was not given in explicit form. See also [3], [4] and [5].

in which

$$\lambda = \frac{m\pi r}{l}, \qquad \eta = \frac{n\pi}{\alpha}. \tag{12}$$

In (12), l is the length of the cylindrical shell and α denotes the central angle subtended by the longitudinal edges (fig. 3).

Substituting (11c, d, e, f) in (10) leads to

$$\begin{aligned}\sum\sum\Bigg[\Bigg(&\eta^4+3\eta^2\lambda^2+\frac{1}{\beta}\lambda^4-2\eta^6-7\eta^4\lambda^2-6\eta^2\lambda^4+\eta^8+4\eta^6\lambda^2\\&+6\eta^4\lambda^4+4\eta^2\lambda^6+\lambda^8\Bigg)w_{mn}-\left(\frac{1}{\beta}\eta^2\lambda+\eta^4\lambda+2\eta^2\lambda^3\right)X_{mn}\\&+\left(\frac{1}{\beta}\eta^3+\frac{2}{\beta}\eta\lambda^2+\eta^5+4\eta^3\lambda^2+4\eta\lambda^4\right)Y_{mn}\\&-\left(\frac{1}{\beta}\eta^4+\frac{2}{\beta}\eta^2\lambda^2+\frac{1}{\beta}\lambda^4\right)Z_{mn}\Bigg]\sin\lambda z\sin\eta\varphi=0,\end{aligned}$$

from which

$$w_{mn} = a_{mn}X_{mn}+b_{mn}Y_{mn}+c_{mn}Z_{mn}, \tag{13}$$

$$\begin{aligned}a_{mn} &= \frac{\eta^2\lambda}{\zeta_{mn}}\left(\frac{1}{\beta}+\eta^2+2\lambda^2\right),\\ b_{mn} &= -\frac{\eta}{\zeta_{mn}}(\eta^2+2\lambda^2)\left(\frac{1}{\beta}+\eta^2+2\lambda^2\right),\\ c_{mn} &= \frac{1}{\beta\zeta_{mn}}(\eta^2+\lambda^2)^2\end{aligned} \tag{14}$$

and

$$\zeta_{mn} = \lambda^4\left(\frac{1}{\beta}-6\eta^2\right)-\eta^2\lambda^2(7\eta^2-3)-\eta^4(2\eta^2-1)+(\eta^2+\lambda^2)^4. \tag{15}$$

Substituting (11b, c, f) in (7c) yields

$$\sum\sum\{[1+\beta(\eta^4+2\eta^2\lambda^2+\lambda^4)]w_{mn}-[\eta+\beta(\eta^3+2\eta\lambda^2)]v_{mn}-Z_{mn}\}\sin\lambda z\sin\eta\varphi=0,$$

from which

$$v_{mn} = d_{mn}X_{mn}+e_{mn}Y_{mn}+f_{mn}Z_{mn} \tag{16}$$

and

$$\begin{aligned}d_{mn} &= \frac{\eta\lambda}{\zeta_{mn}}\left[\frac{1}{\beta}+(\eta^2+\lambda^2)^2\right],\\ e_{mn} &= -\frac{1}{\zeta_{mn}}(\eta^2+2\lambda^2)\left[\frac{1}{\beta}+(\eta^2+\lambda^2)^2\right],\\ f_{mn} &= \frac{1}{\beta\eta\left(\frac{1}{\beta}+\eta^2+2\lambda^2\right)}\left\{\frac{1}{\zeta_{mn}}(\eta^2+\lambda^2)^2\left[\frac{1}{\beta}+(\eta^2+\lambda^2)^2\right]-1\right\}.\end{aligned} \tag{17}$$

The introduction of (11a, b, d) in (7a) leads to

$$\sum\sum[-(\lambda^2+\tfrac{1}{2}\eta^2)u_{mn}-\tfrac{1}{2}\eta\lambda v_{mn}-X_{mn}]\cos\lambda z\sin\eta\varphi=0,$$

from which

$$u_{mn} = g_{mn} X_{mn} + h_{mn} Y_{mn} + i_{mn} Z_{mn} \tag{18}$$

and

$$\begin{aligned} g_{mn} &= -\frac{1}{\eta^2+2\lambda^2}\left\{\frac{\eta^2\lambda^2}{\zeta_{mn}}\left[\frac{1}{\beta}+(\eta^2+\lambda^2)^2\right]+2\right\}, \\ h_{mn} &= \frac{\eta\lambda}{\zeta_{mn}}\left[\frac{1}{\beta}+(\eta^2+\lambda^2)^2\right], \\ i_{mn} &= -\frac{\lambda}{\beta(\eta^2+2\lambda^2)\left(\frac{1}{\beta}+\eta^2+2\lambda^2\right)}\left\{\frac{1}{\zeta_{mn}}(\eta^2+\lambda^2)^2\left[\frac{1}{\beta}+(\eta^2+\lambda^2)^2\right]-1\right\}. \end{aligned} \tag{19}$$

Finally, substituting (18) in (11a), (16) in (11b) and (13) in (11c) respectively leads to

$$\begin{aligned} u &= \sum\sum(g_{mn} X_{mn} + h_{mn} Y_{mn} + i_{mn} Z_{mn}) \cos\lambda z \sin\eta\varphi, \\ v &= \sum\sum(d_{mn} X_{mn} + e_{mn} Y_{mn} + f_{mn} Z_{mn}) \sin\lambda z \cos\eta\varphi, \\ w &= \sum\sum(a_{mn} X_{mn} + b_{mn} Y_{mn} + c_{mn} Z_{mn}) \sin\lambda z \sin\eta\varphi. \end{aligned} \tag{20}$$

The forces are obtained by the substitution of (20) in (5) which yields

$$\begin{aligned} T_x &= -\frac{Et}{r}\sum\sum\lambda(g_{mn} X_{mn} + h_{mn} Y_{mn} + i_{mn} Z_{mn}) \sin\lambda z \sin\eta\varphi, \\ T_\varphi &= \frac{Et}{r}\sum\sum[(a_{mn}-\eta d_{mn}) X_{mn} + (b_{mn}-\eta e_{mn}) Y_{mn} \\ &\quad + (c_{mn}-\eta f_{mn}) Z_{mn}] \sin\lambda z \sin\eta\varphi, \\ S &= \frac{Et}{2r}\sum\sum[(\lambda d_{mn}+\eta g_{mn}) X_{mn} + (\lambda e_{mn}+\eta h_{mn}) Y_{mn} \\ &\quad + (\lambda f_{mn}+\eta i_{mn}) Z_{mn}] \cos\lambda z \cos\eta\varphi, \\ M_x &= -Et\beta\sum\sum\lambda^2(a_{mn} X_{mn} + b_{mn} Y_{mn} + c_{mn} Z_{mn}) \sin\lambda z \sin\eta\varphi, \\ M_\varphi &= -Et\beta\sum\sum\eta[(\eta a_{mn}-d_{mn}) X_{mn} + (\eta b_{mn}-e_{mn}) Y_{mn} \\ &\quad + (\eta c_{mn}-f_{mn}) Z_{mn}] \sin\lambda z \sin\eta\varphi, \\ M_t &= Et\beta\sum\sum\lambda[(\eta a_{mn}-d_{mn}) X_{mn} + (\eta b_{mn}-e_{mn}) Y_{mn} \\ &\quad + (\eta c_{mn}-f_{mn}) Z_{mn}] \cos\lambda z \cos\eta\varphi. \end{aligned} \tag{21}$$

Substituting (21d, e, f) in (2) leads to

$$\begin{aligned} N_\varphi &= -\frac{Et\beta}{r}\sum\sum(\eta^2+\lambda^2)[(\eta a_{mn}-d_{mn}) X_{mn} + (\eta b_{mn}-e_{mn}) Y_{mn} \\ &\quad + (\eta c_{mn}-f_{mn}) Z_{mn}] \sin\lambda z \cos\eta\varphi, \\ N_x &= -\frac{Et\beta}{r}\sum\sum\lambda\{[(\eta^2+\lambda^2) a_{mn} - \eta d_{mn}] X_{mn} \\ &\quad + [(\eta^2+\lambda^2) b_{mn} - \eta e_{mn}] Y_{mn} + [(\eta^2+\lambda^2) c_{mn} - \eta f_{mn}] Z_{mn}\} \cos\lambda z \sin\eta\varphi. \end{aligned} \tag{22}$$

The radial reactions along the longitudinal edge and the transverse edge are, respectively,

$$R_\varphi = N_\varphi + \frac{1}{r} M_t', \qquad R_x = N_x + \frac{1}{r} M_t^\circ. \tag{23}$$

Substituting (21f) and (22) in (23) yields

$$\begin{aligned} R_\varphi &= -\frac{E t \beta}{r} \sum\sum (\eta^2 + 2\lambda^2) [(\eta a_{mn} - d_{mn}) X_{mn} + (\eta b_{mn} - e_{mn}) Y_{mn} \\ &\quad + (\eta c_{mn} - f_{mn}) Z_{mn}] \sin \lambda z \cos \eta \varphi, \\ R_x &= -\frac{E t \beta}{r} \sum\sum \lambda \{[(2\eta^2 + \lambda^2) a_{mn} - 2\eta d_{mn}] X_{mn} \\ &\quad + [(2\eta^2 + \lambda^2) b_{mn} - 2\eta e_{mn}] Y_{mn} + [(2\eta^2 + \lambda^2) c_{mn} - 2\eta f_{mn}] Z_{mn}\} \cos \lambda z \sin \eta \varphi. \end{aligned} \tag{24}$$

Thus the analysis of the bending of simply supported cylindrical shells under particular loading condition is reduced to the determination of the Fourier coefficients X_{mn}, Y_{mn} and Z_{mn}. It should be observed that while the series for the displacement components given by (20) converge rapidly, the speed of convergence decreases with successive differentiation. The validity of this analysis is therefore limited to those loading conditions for which the Fourier coefficients are such that the resulting series are convergent. Some of these cases are treated in the following.

Partial Live Load

For uniformly distributed live load of intensity q extending over part of the cylindrical shell roof shown in fig. 3,

$$\xi = \tau = \rho = 0 \quad \text{for} \quad 0 < \varphi < \varphi_1 \quad \text{and} \quad \varphi_2 < \varphi < \alpha.$$

$$\left.\begin{aligned} \xi &= 0 \\ \tau &= \frac{q}{2} \sin(\alpha - 2\varphi) \\ \rho &= -q \cos^2\left(\frac{\alpha}{2} - \varphi\right) \end{aligned}\right\} \quad \text{for} \quad \varphi_1 < \varphi < \varphi_2.$$

For this case

$$\begin{aligned} X_{mn} &= 0, \\ Y_{mn} &= \frac{4r}{\alpha l} \int_{\varphi_1}^{\varphi_2} \int_0^{l/r} \left(\frac{r^2}{E t} \tau\right) \sin \lambda z \cos \eta \varphi \, dz \, d\varphi \\ &= \frac{2 r^3 q (1 - \cos m\pi)}{E t \alpha l \lambda} A_n, \end{aligned} \tag{25}$$

$$
\begin{aligned}
Z_{mn} &= \frac{4r}{\alpha l}\int_{\varphi_1}^{\varphi_2}\int_0^{l/r}\left(\frac{r^2}{Et}\rho\right)\sin\lambda z\sin\eta\varphi\,dz\,d\varphi \\
&= \frac{2r^3 q(1-\cos m\pi)}{Et\alpha l\lambda}B_n,
\end{aligned}
\tag{25}
$$

in which

$$
\begin{aligned}
A_0 &= \tfrac{1}{4}[\cos(\alpha-2\varphi_2)-\cos(\alpha-2\varphi_1)], \\
A_n &= \frac{1}{\eta^2-4}\{\eta[\sin(\alpha-2\varphi_2)\sin\eta\varphi_2-\sin(\alpha-2\varphi_1)\sin\eta\varphi_1] \\
&\qquad -2[\cos(\alpha-2\varphi_2)\cos\eta\varphi_2-\cos(\alpha-2\varphi_1)\cos\eta\varphi_1]\}, \\
&\qquad\qquad \text{for} \quad n=1,2,3,\ldots \\
B_n &= \frac{1}{\eta^2-4}\{\eta[\cos(\alpha-2\varphi_2)\cos\eta\varphi_2-\cos(\alpha-2\varphi_1)\cos\eta\varphi_1] \\
&\qquad -2[\sin(\alpha-2\varphi_2)\sin\eta\varphi_2-\sin(\alpha-2\varphi_1)\sin\eta\varphi_1]\} \\
&\qquad -\frac{1}{\eta}(\cos\eta\varphi_1-\cos\eta\varphi_2).
\end{aligned}
\tag{26}
$$

When $\eta=n\pi/\alpha=2$ or $\alpha=n\pi/2$, A_n and B_n given by (26) are both indeterminate. For $\alpha=\pi/2$,

$$
\begin{aligned}
A_1 &= \tfrac{1}{2}(\varphi_2-\varphi_1)+\tfrac{1}{8}(\sin 4\varphi_2-\sin 4\varphi_1), \\
B_1 &= -\tfrac{1}{2}(\varphi_2-\varphi_1)+\tfrac{1}{8}(\sin 4\varphi_2-\sin 4\varphi_1)-\tfrac{1}{2}(\cos 2\varphi_1-\cos 2\varphi_2)
\end{aligned}
$$

and, for $\alpha=\pi$,

$$
\begin{aligned}
A_2 &= \tfrac{1}{8}(\cos 4\varphi_1-\cos 4\varphi_2), \\
B_2 &= -\tfrac{1}{8}(\cos 4\varphi_1-\cos 4\varphi_2)-\tfrac{1}{2}(\cos 2\varphi_1-\cos 2\varphi_2).
\end{aligned}
$$

Substituting (25) in (20) yields the displacement components

$$
\begin{aligned}
u &= \frac{4r^3 q}{Et\alpha l}\sum_{m=1,3,5,\ldots}\sum_{n=0,1,2,\ldots}\frac{1}{\lambda}(h_{mn}A_n+i_{mn}B_n)\cos\lambda z\sin\eta\varphi, \\
v &= \frac{4r^3 q}{Et\alpha l}\sum_{m=1,3,5,\ldots}\sum_{n=0,1,2,\ldots}\frac{1}{\lambda}(e_{mn}A_n+f_{mn}B_n)\sin\lambda z\cos\eta\varphi, \\
w &= \frac{4r^3 q}{Et\alpha l}\sum_{m=1,3,5,\ldots}\sum_{n=0,1,2,\ldots}\frac{1}{\lambda}(b_{mn}A_n+c_{mn}B_n)\sin\lambda z\sin\eta\varphi.
\end{aligned}
\tag{27}
$$

The forces can be derived similarly by the substitution of (25) in (21), (22) and (24).

For the special case where $\varphi_1=0$ and $\varphi_2=\alpha$, (26) becomes

$$
\begin{aligned}
A_0 &= 0, \\
A_n &= \frac{2\cos\alpha}{\eta^2-4}(1-\cos n\pi), \qquad \text{for} \quad n=1,2,3,\ldots \\
B_n &= -\left(\frac{\eta\cos\alpha}{\eta^2-4}+\frac{1}{\eta}\right)(1-\cos n\pi).
\end{aligned}
$$

It is of interest to note that, in this case, if r is allowed to approach infinity and α zero while the product $\alpha r = l_1$ is kept constant, (27c) takes the form

$$w = -\frac{192\,q}{\pi^6 E t^3} \sum_{m=1,3,5,\ldots} \sum_{n=1,3,5,\ldots} \frac{1}{m\,n\left(\frac{m^2}{l^2}+\frac{n^2}{l_1^2}\right)^2} \sin\frac{m\pi x}{l} \sin\frac{n\pi y}{l_1},$$

which is the well known Navier solution[4]) for a simply supported rectangular plate subjected to uniformly distributed load of intensity q with μ assumed as zero. In the last expression, φ/α is replaced by y/l_1, l_1 being the transverse length of the plate and y the transverse distance from the origin.

Partial Hydrostatic Load

For the hydrostatic load shown in fig. 4, $\xi = \tau = 0$ and

$$\rho = -\gamma r\left[\sin\left(\varphi_1 - \frac{\alpha}{2}\right) + \sin\left(\frac{\alpha}{2} - \varphi\right)\right] \quad \text{for} \quad 0 < \varphi < \varphi_1,$$

$$\rho = 0 \quad \text{for} \quad \varphi_1 < \varphi < \alpha,$$

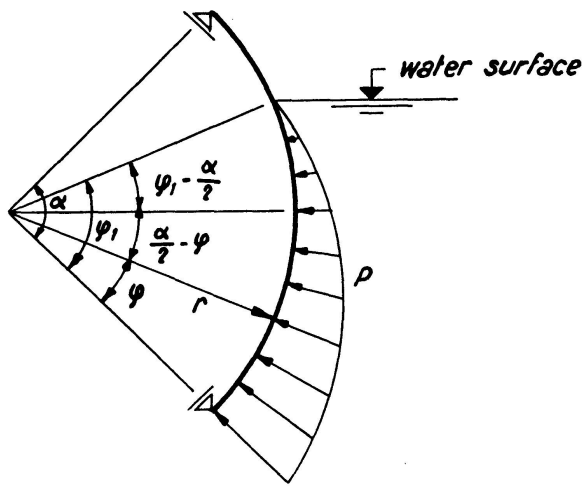

Fig. 4.

in which γ is the unit weight of the liquid. In this case,

$$X_{mn} = Y_{mn} = 0,$$

$$Z_{mn} = \frac{4r}{\alpha l} \int_0^{\varphi_1} \int_0^{l/r} \left(\frac{r^2}{E t}\rho\right) \sin\lambda z \sin\eta\varphi\, dz\, d\varphi \tag{28}$$

$$= \frac{4 r^4 \gamma (1 - \cos m\pi)}{E t \alpha l \lambda} C_n,$$

[4]) See for instance [2], p. 117.

in which

$$C_n = \frac{1}{\eta^2-1}\left\{\cos\left(\varphi_1-\frac{\alpha}{2}\right)\sin\eta\varphi_1-\eta\left[\sin\left(\varphi_1-\frac{\alpha}{2}\right)\cos\eta\varphi_1+\sin\frac{\alpha}{2}\right]\right\} - \frac{1}{\eta}\sin\left(\varphi_1-\frac{\alpha}{2}\right)(1-\cos\eta\varphi_1). \tag{29}$$

When $\eta = n\pi/\alpha = 1$ or $\alpha = n\pi$, C_n is indeterminate. For $\alpha = \pi$,

$$C_1 = \cos\varphi_1(1-\cos\varphi_1) - \tfrac{1}{2}(1-\cos^2\varphi_1).$$

Substituting (28) in (20) leads to

$$\begin{aligned} u &= \frac{8r^4\gamma}{Et\alpha l}\sum_{m=1,3,5,\ldots}\sum_{n=1,2,3,\ldots}\frac{1}{\lambda}i_{mn}C_n\cos\lambda z\sin\eta\varphi, \\ v &= \frac{8r^4\gamma}{Et\alpha l}\sum_{m=1,3,5,\ldots}\sum_{n=1,2,3,\ldots}\frac{1}{\lambda}f_{mn}C_n\sin\lambda z\cos\eta\varphi, \\ w &= \frac{8r^4\gamma}{Et\alpha l}\sum_{m=1,3,5,\ldots}\sum_{n=1,2,3,\ldots}\frac{1}{\lambda}c_{mn}C_n\sin\lambda z\sin\eta\varphi \end{aligned} \tag{30}$$

and the forces can be obtained similarly by substituting (28) in (21), (22) and (24).

Wind Load

For the prescribed wind load[5]) shown in fig. 5, $\xi = \tau = 0$ and

$$\begin{aligned} \rho &= k_1 p \quad &&\text{for} \quad 0<\varphi<\frac{\alpha}{4}, \\ \rho &= k_2 p \quad &&\text{for} \quad \frac{\alpha}{4}<\varphi<\frac{3\alpha}{4}, \\ \rho &= k_3 p \quad &&\text{for} \quad \frac{3\alpha}{4}<\varphi<\alpha. \end{aligned}$$

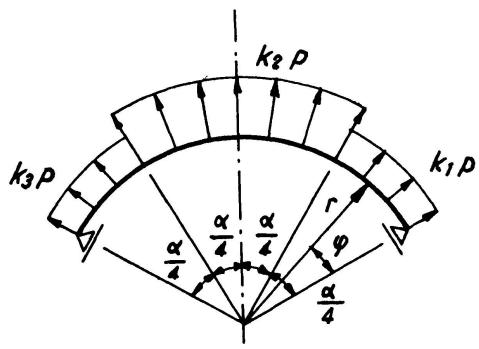

Fig. 5.

[5]) The wind load used in this example is that recommended by Sub-Committee No. 31 of the Structural Division of the American Society of Civil Engineers [6]. The wind load on the windward quarter of the shell may be either suction or pressure depending upon the ratio of the rise to the chord length of the cross section of the shell. Accordingly k may be either positive or negative.

in which p is the intensity of the wind load and k_1, k_2 and k_3 are constants. In this case,

$$X_{mn} = Y_{mn} = 0,$$

$$Z_{mn} = \frac{4r}{\alpha l} \int_0^{\alpha} \int_0^{l/r} \left(\frac{r^2}{E t} \rho\right) \sin \lambda z \sin \eta \varphi \, dz \, d\varphi \tag{31}$$

$$= \frac{8 r^3 \rho (1 - \cos m \pi)}{E t \alpha l \lambda \eta} D_n,$$

in which

$$D_n = k_1 \sin^2 \frac{n\pi}{8} + k_2 \sin \frac{n\pi}{2} \sin \frac{n\pi}{4} + k_3 \sin \frac{7 n \pi}{8} \sin \frac{n\pi}{8}. \tag{32}$$

The corresponding displacement components are

$$\begin{aligned} u &= \frac{16 r^3 p}{E t \alpha l} \sum_{m=1,3,5,\ldots} \sum_{n=1,2,3,\ldots} \frac{1}{\lambda \eta} i_{mn} D_n \cos \lambda z \sin \eta \varphi, \\ v &= \frac{16 r^3 p}{E t \alpha l} \sum_{m=1,3,5,\ldots} \sum_{n=1,2,3,\ldots} \frac{1}{\lambda \eta} f_{mn} D_n \sin \lambda z \cos \eta \varphi, \\ w &= \frac{16 r^3 p}{E t \alpha l} \sum_{m=1,3,5,\ldots} \sum_{n=1,2,3,\ldots} \frac{1}{\lambda \eta} c_{mn} D_n \sin \lambda z \sin \eta \varphi \end{aligned} \tag{33}$$

and the forces can be obtained similarly by substituting (31) in (21), (22) and (24).

Discussion

The solutions [6]) for a cylindrical shell simply supported along the transverse edges and subjected to line loads applied along the longitudinal edges are well known. A discussion and comparison of the various solutions were given by Moe [7]. This problem corresponds to the solution of the homogeneous part of (10) with X, Y and Z set equal to zero, i.e., the complimentary solution. For nonsymmetrical edge loading, the solution contains eight integration constants which, by resolving the edge loads into a symmetrical set and an antisymmetrical set, may be reduced to two independent sets of four. For instance, the radial displacement component is given in the form

$$w = [B_1 F_1(\varphi) + B_2 F_2(\varphi) + B_3 F_3(\varphi) + B_4 F_4(\varphi)] \sin \lambda z$$

in which $F_1(\varphi)$, $F_2(\varphi)$, $F_3(\varphi)$ and $F_4(\varphi)$ are functions of φ and B_1, B_2, B_3 and B_4 the four integration constants.

For a partially loaded cylindrical shell with various longitudinal edge conditions and simply supported along the transverse edges, a solution may be

---

[6]) See for instance [1], p. 119. Tables are given in this reference to aid solution.

obtained by the superposition of the particular solution presented in this paper, assuming that the loading is such that the series involved are convergent, and the complimentary solution just discussed. For example, to obtain a solution for the case where the longitudinal edges are free edges, the four integration constants are determined by the boundary conditions

$$\begin{aligned}
[S]_{\varphi=0} &= [(S)_1+(S)_2]_{\varphi=0} = 0,\\
[T_\varphi]_{\varphi=0} &= [(T_\varphi)_2]_{\varphi=0} = 0,\\
[R_\varphi]_{\varphi=0} &= [(R_\varphi)_1+(R_\varphi)_z]_{\varphi=0} = 0,\\
[M_\varphi)_{\varphi=0} &= [(M_\varphi)_2]_{\varphi=0} = 0,
\end{aligned}$$

in which the subscript 1 denotes the particular solution and 2 the complimentary solution. If the longitudinal edges are fixed, the boundary conditions are

$$\begin{aligned}
[u]_{\varphi=0} &= [(u)_2]_{\varphi=0} = 0,\\
[v]_{\varphi=0} &= [(v)_1+(v)_2]_{\varphi=0} = 0,\\
[w]_{\varphi=0} &= [(w)_2]_{\varphi=0} = 0,\\
[w^\circ-v]_{\varphi=0} &= [(w^\circ-v)_1+(w^\circ-v)_2]_{\varphi=0} = 0.
\end{aligned}$$

For the longitudinal edges supported as shown in fig. 6, the boundary conditions are

$$\begin{aligned}
[u]_{\varphi=0} &= [(u)_2]_{\varphi=0} = 0,\\
[v]_{\varphi=0} &= [(v)_1+(v)_2]_{\varphi=0} = 0,\\
[w]_{\varphi=0} &= [(w)_2]_{\varphi=0} = 0,\\
[M_\varphi]_{\varphi=0} &= [(M_\varphi)_2]_{\varphi=0} = 0
\end{aligned}$$

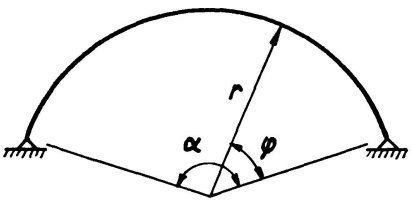

Fig. 6.

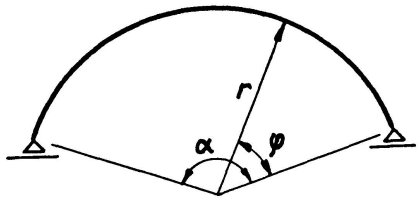

Fig. 7.

and, for the longitudinal edges supported as shown in fig. 7, the corresponding boundary conditions are

$$[u]_{\varphi=0} = [(u)_2]_{\varphi=0} = 0,$$

$$\left[T_\varphi \cos\frac{\alpha}{2} + R_\varphi \sin\frac{\alpha}{2}\right]_{\varphi=0} = \left[(T_\varphi)_2 \cos\frac{\alpha}{2} + \{(R_\varphi)_1 + (R_\varphi)_2\} \sin\frac{\alpha}{2}\right]_{\varphi=0} = 0,$$

$$\left[w \cos\frac{\alpha}{2} + v \sin\frac{\alpha}{2}\right]_{\varphi=0} = \left[(w)_2 \cos\frac{\alpha}{2} + \{(v)_1 + (v)_2\} \sin\frac{\alpha}{2}\right]_{\varphi=0} = 0,$$

$$[M_\varphi]_{\varphi=0} = [(M_\varphi)_2]_{\varphi=0} = 0.$$

It is assumed in these examples that the applied load is either symmetrical or antisymmetrical with respect to the vertical radius of the shell. Nonsymmetrical load, of course, can always be treated as the combination of a symmetrical and an antisymmetrical load.

If the boundary conditions along the two longitudinal edges are not identical, however, the eight integration constants must be determined simultaneously.

References

1. American Society of Civil Engineers Manuals of Engineering Practice No. 31, "Design of Cylindrical Concrete Shell Roofs", New York, 1952 (Reprinted 1956).
2. Timoshenko, S., "Theory of Plates and Shells", McGraw-Hill Book Co., Inc., New York, 1940, p. 443.
3. Timoshenko, S., "Theory of Elasticity", Vol. 2, St. Petersburg, 1916, pp. 384—387.
4. Reissner, H., "Formänderung und Spannungen einer dünnwandigen, an den Rändern frei aufliegenden, beliebig belasteten Zylinderschale", Z. angew. Math. Mech., Vol. 13, 1933, pp. 133—138.
5. Wojtaszak, I. A., "Deformation of Thin Cylindrical Shells Subjected to Internal Loading", Phil. Mag., Ser. 7, Vol. 18, 1934, p. 1099.
6. "Final Report of Sub-Committee No. 31, Committee on Steel of the Structural Division, on Wind Bracing in Steel Buildings", Trans. ASCE, Vol. 105, 1940, p. 1713.
7. Moe, J., "On the Theory of Cylindrical Shells, Explicit Solution of the Characteristic Equation, and Discussion of the Accuracy of Various Shell Theories", Publ. Int. Assoc. Bridge Struct. Eng., Vol. 13, Zurich, 1953, p. 283.

Summary

An explicit solution for partially loaded cylindrical shells simply supported along the transverse edges and the longitudinal edges is presented. The solution is obtained by the representation of the displacement components and the load components in the forms of double trigonometric series. Therefore its validity is limited to those loadings for which the series involved are convergent. Some of these cases are treated in detail.

In order to simplify the expressions involved in the solution, the value of Poisson's ratio is assumed to be zero, although its retention presents no fundamental difficulty.

While no details are given, the solution for partially loaded cylindrical shells with various longitudinal edge conditions and simply supported along the transverse edges is also discussed.

Résumé

L'auteur expose une solution explicite au problème des voiles cylindriques partiellement chargés, simplement appuyés le long des bords longitudinaux et

transversaux. Pour arriver à la solution, on exprime les composantes des charges et des déplacements à l'aide de séries doubles trigonométriques. De ce fait, la solution n'est valable que si les charges correspondent à des séries convergentes. Quelques-uns de ces cas sont traités en détail.

Pour simplifier les expressions intervenant dans la solution, on a admis un nombre de Poisson égal à zéro; cependant, il n'y a aucune difficulté de principe à en introduire la valeur réelle.

Sans entrer dans les détails, l'auteur discute également le problème des voiles cylindriques partiellement chargés, soumis à des conditions diverses sur les bords longitudinaux et simplement appuyés le long des bords transversaux.

Zusammenfassung

Es wird eine explizite Lösung für teilweise belastete, an allen Rändern frei drehbar gelagerte Zylinderschalen angegeben. Man erhält die Lösung durch Darstellung der Verschiebungs- und Belastungskomponenten mit Hilfe von doppelten trigonometrischen Reihen. Dadurch wird allerdings ihre Gültigkeit auf diejenigen Fälle beschränkt, für welche die angewendeten Reihen konvergent sind. Einige dieser Fälle werden detailliert vorgeführt.

Um die Ausdrücke der Lösung zu vereinfachen, wurde die Poissonsche Zahl gleich null angenommen, obwohl keine fundamentalen Schwierigkeiten auftreten, wenn man sie beibehält.

Ohne auf Details einzutreten, wird auch die Lösung für teilweise belastete Zylinderschalen mit verschiedenen Längsrandbedingungen und frei drehbar gelagerten Querrändern diskutiert.