Zeitschrift: IABSE publications = Mémoires AIPC = IVBH Abhandlungen

Band: 13 (1953)

Artikel: On the theory of cylindrical shells : Explicit solution of the characteristic equation, and discussion of the accuracy of various shell theories

Autor: Moe, Johannes

DOI: https://doi.org/10.5169/seals-13204

Nutzungsbedingungen

Die ETH-Bibliothek ist die Anbieterin der digitalisierten Zeitschriften auf E-Periodica. Sie besitzt keine Urheberrechte an den Zeitschriften und ist nicht verantwortlich für deren Inhalte. Die Rechte liegen in der Regel bei den Herausgebern beziehungsweise den externen Rechteinhabern. Das Veröffentlichen von Bildern in Print- und Online-Publikationen sowie auf Social Media-Kanälen oder Webseiten ist nur mit vorheriger Genehmigung der Rechteinhaber erlaubt. Mehr erfahren

Conditions d'utilisation

L'ETH Library est le fournisseur des revues numérisées. Elle ne détient aucun droit d'auteur sur les revues et n'est pas responsable de leur contenu. En règle générale, les droits sont détenus par les éditeurs ou les détenteurs de droits externes. La reproduction d'images dans des publications imprimées ou en ligne ainsi que sur des canaux de médias sociaux ou des sites web n'est autorisée qu'avec l'accord préalable des détenteurs des droits. En savoir plus

Terms of use

The ETH Library is the provider of the digitised journals. It does not own any copyrights to the journals and is not responsible for their content. The rights usually lie with the publishers or the external rights holders. Publishing images in print and online publications, as well as on social media channels or websites, is only permitted with the prior consent of the rights holders. Find out more

Download PDF: 17.01.2026

ETH-Bibliothek Zürich, E-Periodica, https://www.e-periodica.ch

On the theory of cylindrical shells
Explicit solution of the characteristic equation, and discussion of the accuracy of various shell theories

Sur la théorie des voiles minces cylindriques
Solution explicite de l'équation caractéristique et discussion de l'exactitude de quelques théories

Über die Theorie zylindrischer Schalen
Explizite Lösung der charakteristischen Gleichung und Besprechung der Genauigkeit einiger Schalentheorien

JOHANNES MOE, C. E., Trondheim

1. Introduction

On the basis of the equations of equilibrium and compatibility of the shell element (Fig. 2) FLÜGGE [1] established the following set of simultaneous differential equations.

$$u''+\tfrac{1}{2}(1-\mu)u^{\cdot\cdot}+\mu w'+\tfrac{1}{2}(1+\mu)v'^{\cdot}+k[\tfrac{1}{2}(1-\mu)u^{\cdot\cdot}-w'''+\tfrac{1}{2}(1-\mu)w'^{\cdot\cdot}]+X\frac{a^2}{D}=0$$

$$\tfrac{1}{2}(1+\mu)u'^{\cdot}+v^{\cdot\cdot}+\tfrac{1}{2}(1-\mu)v''+w^{\cdot}+k[\tfrac{3}{2}(1-\mu)v''-\tfrac{1}{2}(3-\mu)w''^{\cdot}]+Y\frac{a^2}{D}=0 \qquad (1)$$

$$\mu u'+v^{\cdot}+w+k[\tfrac{1}{2}(1-\mu)u'^{\cdot\cdot}-u'''-\tfrac{1}{2}(3-\mu)v''^{\cdot}+w''''+2w''^{\cdot\cdot}+w^{\cdot\cdot\cdot\cdot}+2w^{\cdot\cdot}+w]+Z\frac{a^2}{D}=0$$

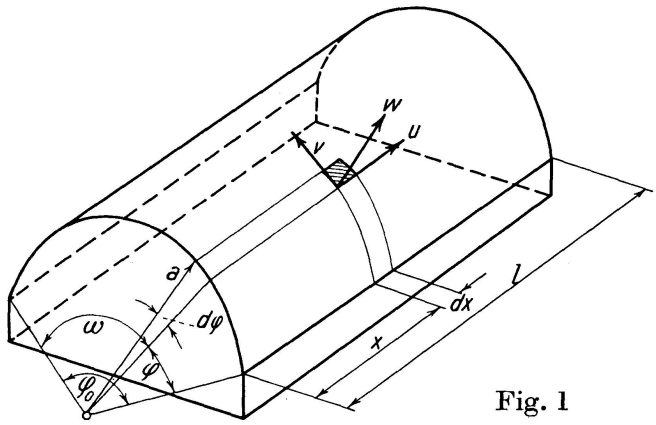

Fig. 1

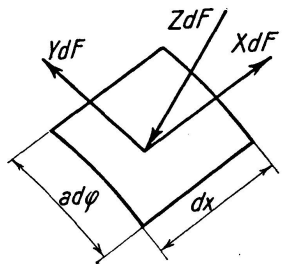

Fig. 2

where u, v and w are, respectively, the longitudinal, tangential and radial deflection of a shell element (Fig. 1).

X, Y and Z are the loads, $dF = a \cdot d\varphi \cdot dx$ (Fig. 2).

$$\begin{aligned}
\mu &= \text{Poisson's ratio} \\
k &= \frac{d^2}{12\,a^2}, \qquad D = \frac{E\,d}{1-\mu^2} \\
d &= \text{thickness of shell} \\
a &= \text{radius of shell} \\
E &= \text{modulus of elasticity} \\
f' &= a\frac{\delta f}{\delta x} \quad \dot{f} = \frac{\delta f}{\delta \varphi}
\end{aligned}$$

The homogeneous part of Eqs. (1) is easily solved by substituting.

$$\begin{aligned}
u &= E \cdot e^{m\varphi} \cos \lambda \frac{x}{a} \\
v &= F \cdot e^{m\varphi} \sin \lambda \frac{x}{a} \\
w &= G \cdot e^{m\varphi} \sin \lambda \frac{x}{a}
\end{aligned} \tag{2}$$

where E, F and G are constants of integration,

$$\lambda = \frac{n\,\pi\,a}{l} \qquad n = 1, 3, 5 \ldots\ldots$$

l = length of the shell and the exponent m is found from the following equation of 8th degree [2].

$$\begin{aligned}
&m^8 + m^6[2 - 4\lambda^2] + m^4[1 + \lambda^2(-8 + 2\mu) + 6\lambda^4] + m^2[\lambda^2(-4 + 2\mu) + \\
&\quad + 6\lambda^4 - 4\lambda^6] + \lambda^4(4 - 3\mu^2) - 2\lambda^6\mu + \lambda^8 + \lambda^4\frac{1-\mu^2}{k} = 0
\end{aligned} \tag{3}$$

Eq. (3) is known as DISCHINGER's characteristic equation, which can be solved without any fundamental difficulties. By introducing $z = m^2$ an equation of 4th degree is obtained, on the basis of which the cubic resolvent equation may be established [7]. The cubic equation is then solved in the general way by means of trigonometric functions. This method is discussed in detail by DISCHINGER [2].

From a practical viewpoint, however, the above mentioned method of solution has the great disadvantages of being tedious and extremely sensetive against inaccuracies.

In the following it will be shown that these difficulties may be avoided, and the solutions of Eq. (3) are given in explicit form.

2. Solution of the characteristic equation

It is convenient to introduce the following notations [3]

$$\rho = \sqrt[8]{\frac{\lambda^4}{k}} = \sqrt[8]{\frac{12\,\pi^4 a^6}{d^2 l^4}}$$
$$\kappa = \frac{\lambda^2}{\rho^2} = \frac{\pi^2 a^2}{\rho^2 l^2} \tag{4}$$

For reinforced concrete shells ρ will vary within the interval 2—30 and κ from 0.03—0.45.

By substituting

$$\overline{m} = \frac{m}{\rho} \tag{5}$$

DISCHINGER's characteristic equation (3) takes the following form:

$$\begin{aligned}\overline{m}^8 &+ \left(\frac{2}{\rho^2} - 4\,\kappa\right)\overline{m}^6 + \left[6\,\kappa^2 + (2\,\mu - 8)\frac{\kappa}{\rho^2} + \frac{1}{\rho^4}\right]\overline{m}^4 \\ &+ \left[-4\,\kappa^3 + 6\,\frac{\kappa^2}{\rho^2} + (2\,\mu - 4)\frac{\kappa}{\rho^4}\right]\overline{m}^2 + \left[\kappa^4 - 2\,\mu\,\frac{\kappa^3}{\rho^2}\right. \\ &\left. + (4 - 3\,\mu^2)\frac{\kappa^2}{\rho^4} + 1 - \mu^2\right] = 0\end{aligned} \tag{6}$$

By introducing $z = \overline{m}^2$ the following equation of 4th degree is obtained:

$$\begin{aligned}z^4 &+ \left(\frac{2}{\rho^2} - 4\,\kappa\right)z^3 + \left[6\,\kappa^2 + (2\,\mu - 8)\frac{\kappa}{\rho^2} + \frac{1}{\rho^4}\right]z^2 \\ &+ \left[-4\,\kappa^3 + 6\,\frac{\kappa^2}{\rho^2} + (2\,\mu - 4)\frac{\kappa}{\rho^4}\right]z + \left[\kappa^4 - 2\,\mu\,\frac{\kappa^3}{\rho^2} + (4 - 3\,\mu^2)\frac{\kappa^2}{\rho^4} + 1 - \mu^2\right] = 0\end{aligned} \tag{6a}$$

Substituting

$$z = \zeta - \tfrac{1}{4}\left(\frac{2}{\rho^2} - 4\kappa\right) \tag{7}$$

one arrives at a new equation of 4th degree:

$$\begin{aligned}\zeta^4 &+ \left[-\frac{1}{2\,\rho^4} - 2\,(1 - \mu)\frac{\kappa}{\rho^2}\right]\zeta^2 + \left[-4\,\frac{\kappa^2}{\rho^2}(1 - \mu)\right]\zeta \\ &+ \frac{1}{16\,\rho^8} + \frac{1 - \mu}{2}\,\frac{\kappa}{\rho^6} + 3\,(1 - \mu^2)\frac{\kappa^2}{\rho^4} + 1 - \mu^2 = 0\end{aligned} \tag{8}$$

which in abbreviated form reads

$$\zeta^4 + p\,\zeta^2 + q\,\zeta + r = 0 \tag{8a}$$

and its cubic resolvent equation becomes [7]:

$$y^3 + 2\,p\,y^2 + (p^2 - 4\,r)\,y - q^2 = 0 \tag{9}$$

where in Eqs. (8a) and (9)

$$q = -4\frac{\kappa^2}{\rho^2}(1-\mu)$$
$$p = -\left[\frac{1}{2\rho^4}+2(1-\mu)\frac{\kappa}{\rho^2}\right] \tag{10}$$
$$r = \frac{1}{16\rho^8}+\frac{1-\mu}{2}\frac{\kappa}{\rho^6}+3(1-\mu^2)\frac{\kappa^2}{\rho^4}+1-\mu^2$$

Equation (9) is now easily solved. Noticing that

$$q^2 = 16\frac{\kappa^4}{\rho^4}(1-\mu)^2$$

always is a very small quantity (order of magnitude 10^{-6}) while

$$p^2-4r \approx -4$$

one of the roots y_3 is found from the following simplified equation:

$$(p^2-4r)\,y_3-q^2=0 \tag{9a}$$

which gives:

$$y_3 = \frac{q^2}{p^2-4r} \tag{11a}$$

This root is very small compared to unity, and it is therefore permissible to neglect the terms of second and third degree in Eq. (9) when evaluating y_3. The two other roots are then found by ignoring the small quantity q^2 in Eq. (9):

$$y^2+2py+p^2-4r=0 \tag{9b}$$

Thus yielding

$$y_{1,2} = -p \pm 2\sqrt{r} \tag{11b}$$

Substituting for p, q and r from Eq. (10) into (11) one gets:

$$y_{1.2} = \left[\frac{1}{2\rho^4}+2(1-\mu)\frac{\kappa}{\rho^2}\right] \pm 2\sqrt{1-\mu^2+3(1-\mu^2)\frac{\kappa^2}{\rho^4}+\frac{1-\mu}{2}\frac{\kappa}{\rho^6}+\frac{1}{16\rho^8}}$$
$$y_3 = -\frac{16\frac{\kappa^4}{\rho^4}(1-\mu)^2}{4(1-\mu^2)+8(1+\mu-2\mu^2)\frac{\kappa^2}{\rho^4}} \tag{12ab}$$

These roots should satisfy the three conditions below:

$$y_1 \cdot y_2 \cdot y_3 = q^2$$
$$y_1+y_2+y_3 = -2p \tag{13abc}$$
$$y_1y_2+y_1y_3+y_2y_3 = p^2-4r$$

Eq. (13a) is identically satisfied, while the error in Eq. (13b) is of the magnitude $4\frac{\pi^4}{\rho^4}$ which is always $<10^{-6}$, and finally in Eq. (13c) the error will be

$$4\frac{\kappa^2}{\rho^4}\left[\frac{1}{\rho^4}+4\frac{\kappa}{\rho^2}\right]$$

which is always $\ll 10^{-6}$.

From the binominal formula one has

$$\sqrt{c+\Delta}\approx\sqrt{c}+\frac{\Delta}{2\sqrt{c}} \tag{14}$$

if Δ is a very small quantity compared to c.

Eq. (12a) may then be written:

$$y_{1.2}=\left[\frac{1}{2\rho^4}+2(1-\mu)\frac{\kappa}{\rho^2}\right]\pm\left\{2\sqrt{1-\mu^2}+3(1-\mu^2)\frac{\kappa^2}{\rho^4}+\frac{1-\mu}{2}\frac{\kappa}{\rho^6}+\frac{1}{16\rho^8}\right\} \tag{12c}$$

Referring to HÜTTE [7] and other handbooks

$$\begin{aligned}\zeta_1&=\tfrac{1}{2}(\sqrt{y_1}+\sqrt{y_2}+\sqrt{y_3})\\ \zeta_2&=\tfrac{1}{2}(\sqrt{y_1}-\sqrt{y_2}-\sqrt{y_3})\\ \zeta_3&=\tfrac{1}{2}(-\sqrt{y_1}+\sqrt{y_2}-\sqrt{y_3})\\ \zeta_4&=\tfrac{1}{2}(-\sqrt{y_1}-\sqrt{y_2}+\sqrt{y_3})\end{aligned} \tag{15}$$

where the signs must be chosen in such a way that

$$\sqrt{y_1}\cdot\sqrt{y_2}\cdot\sqrt{y_3}=-q=4\frac{\kappa^2}{\rho^2}(1-\mu) \tag{15a}$$

Eqs. (12c) and (14) yield:

$$\sqrt{y_1}=\tfrac{1}{2}\sqrt{2}\left\{2\sqrt[4]{1-\mu^2}+\tfrac{3}{2}(1-\mu^2)\frac{\kappa^2}{\rho^4}+\frac{1-\mu}{4}\frac{\kappa}{\rho^6}+\frac{1}{32\rho^8}+\left[\frac{1}{4\rho^4}+(1-\mu)\frac{\kappa}{\rho^2}\right]\right\} \tag{16a}$$

$$\sqrt{y_2}=\frac{i}{2}\sqrt{2}\left\{2\sqrt[4]{1-\mu^2}+\tfrac{3}{2}(1-\mu^2)\frac{\kappa^2}{\rho^4}+\frac{1-\mu}{4}\frac{\kappa}{\rho^6}+\frac{1}{32\rho^8}-\left[\frac{1}{4\rho^4}+(1-\mu)\frac{\kappa}{\rho^2}\right]\right\} \tag{16b}$$

where $$i=\sqrt{-1}$$

and from equation (12b):

$$\sqrt{y_3}=-\frac{4\frac{\kappa^2}{\rho^2}(1-\mu)i}{\sqrt{4(1-\mu^2)+8(1+\mu-2\mu^2)\frac{\kappa^2}{\rho^4}}}\approx-\frac{2\frac{\kappa^2}{\rho^2}(1-\mu)i}{\sqrt{1-\mu^2}+(1+\mu-2\mu^2)\frac{\kappa^2}{\rho^4}}$$

As $\sqrt{y_3}$ is a very small quantity as compared to $\sqrt{y_1}$ and $\sqrt{y_2}$ it is sufficiently accurate to write

$$\sqrt{y_3}=-2i\frac{\kappa^2}{\rho^2}\frac{1-\mu}{\sqrt{1-\mu^2}}=-2\sqrt{\frac{1-\mu}{1+\mu}}\frac{\kappa^2}{\rho^2}i \tag{16c}$$

By substitution from Eqs. (16) into Eqs. (15) one gets:

$$\begin{aligned}
\zeta_{1.2} &= \tfrac{1}{2}\sqrt{2}\left\{\sqrt[4]{1-\mu^2}+\tfrac{3}{4}(1-\mu^2)\frac{\kappa^2}{\rho^4}+\frac{1-\mu}{8}\frac{\kappa}{\rho^6}+\frac{1}{64\rho^8}+\left(\frac{1}{8\rho^4}+\frac{1-\mu}{2}\frac{\kappa}{\rho^2}\right)\right\} \\
&\pm\frac{i}{2}\sqrt{2}\left\{\sqrt[4]{1-\mu^2}+\tfrac{3}{4}(1-\mu^2)\frac{\kappa^2}{\rho^4}+\frac{1-\mu}{8}\frac{\kappa}{\rho^6}+\frac{1}{64\rho^8}-\left(\frac{1}{8\rho^4}+\frac{1-\mu}{2}\frac{\kappa}{\rho^2}\right)-\sqrt{\frac{2(1-\mu)}{1+\mu}}\cdot\frac{\kappa^2}{\rho^2}\right\} \\
\zeta_{3.4} &= -\tfrac{1}{2}\sqrt{2}\left\{\sqrt[4]{1-\mu^2}+\tfrac{3}{4}(1-\mu^2)\frac{\kappa^2}{\rho^4}+\frac{1-\mu}{8}\frac{\kappa}{\rho^6}+\frac{1}{64\rho^8}+\left(\frac{1}{8\rho^4}+\frac{1-\mu}{2}\frac{\kappa}{\rho^2}\right)\right\} \\
&\pm\frac{i}{2}\sqrt{2}\left\{\sqrt[4]{1-\mu^2}+\tfrac{3}{4}(1-\mu^2)\frac{\kappa^2}{\rho^4}+\frac{1-\mu}{8}\frac{\kappa}{\rho^6}+\frac{1}{64\rho^8}-\left(\frac{1}{8\rho^4}+\frac{1-\mu}{2}\frac{\kappa}{\rho^2}\right)+\sqrt{\frac{2(1-\mu)}{1+\mu}}\cdot\frac{\kappa^2}{\rho^2}\right\}
\end{aligned} \tag{17}$$

and from Eq. (7)

$$\begin{aligned}
z_{1.2} &= \tfrac{1}{2}\sqrt{2}\left\{\sqrt[4]{1-\mu^2}+\tfrac{3}{4}(1-\mu^2)\frac{\kappa^2}{\rho^4}+\frac{1-\mu}{8}\frac{\kappa}{\rho^6}+\frac{1}{64\rho^8}+\left(\frac{1}{8\rho^4}+\frac{1-\mu}{2}\frac{\kappa}{\rho^2}\right)+\sqrt{2}\left(\kappa-\frac{1}{2\rho^2}\right)\right\} \\
&\pm\frac{i}{2}\sqrt{2}\left\{\sqrt[4]{1-\mu^2}+\tfrac{3}{4}(1-\mu^2)\frac{\kappa^2}{\rho^4}+\frac{1-\mu}{8}\frac{\kappa}{\rho^6}+\frac{1}{64\rho^8}-\left(\frac{1}{8\rho^4}+\frac{1-\mu}{2}\frac{\kappa}{\rho^2}\right)-\sqrt{\frac{2(1-\mu)}{1+\mu}}\cdot\frac{\kappa^2}{\rho^2}\right\} \\
z_{3.4} &= -\tfrac{1}{2}\sqrt{2}\left\{\sqrt[4]{1-\mu^2}+\tfrac{3}{4}(1-\mu^2)\frac{\kappa^2}{\rho^4}+\frac{1-\mu}{8}\frac{\kappa}{\rho^6}+\frac{1}{64\rho^8}+\left(\frac{1}{8\rho^4}+\frac{1-\mu}{2}\frac{\kappa}{\rho^2}\right)-\sqrt{2}\left(\kappa-\frac{1}{2\rho^2}\right)\right\} \\
&\pm\frac{i}{2}\sqrt{2}\left\{\sqrt[4]{1-\mu^2}+\tfrac{3}{4}(1-\mu^2)\frac{\kappa^2}{\rho^4}+\frac{1-\mu}{8}\frac{\kappa}{\rho^6}+\frac{1}{64\rho^8}-\left(\frac{1}{8\rho^4}+\frac{1-\mu}{2}\frac{\kappa}{\rho^2}\right)+\sqrt{\frac{2(1-\mu)}{1+\mu}}\cdot\frac{\kappa^2}{\rho^2}\right\}
\end{aligned} \tag{18}$$

This is more conveniently written as follows

$$\begin{aligned}
z_{1.2} &= v_1 \pm \psi_1 i \\
z_{3.4} &= v_2 \pm \psi_2 i
\end{aligned} \tag{19}$$

where

$$\begin{aligned}
v_{1.2} &= \pm\tfrac{1}{2}\sqrt{2}\left\{\sqrt[4]{1-\mu^2}+\tfrac{3}{4}(1-\mu^2)\frac{\kappa^2}{\rho^4}+\frac{1-\mu}{8}\frac{\kappa}{\rho^6}+\frac{1}{64\rho^8}+\left(\frac{1}{8\rho^4}+\frac{1-\mu}{2}\frac{\kappa}{\rho^2}\right)\pm\sqrt{2}\left(\kappa-\frac{1}{2\rho^2}\right)\right\} \\
\psi_{1.2} &= \tfrac{1}{2}\sqrt{2}\left\{\sqrt[4]{1-\mu^2}+\tfrac{3}{4}(1-\mu^2)\frac{\kappa^2}{\rho^4}+\frac{1-\mu}{8}\frac{\kappa}{\rho^6}+\frac{1}{64\rho^8}-\left(\frac{1}{8\rho^4}+\frac{1-\mu}{2}\frac{\kappa}{\rho^2}\right)\mp\sqrt{\frac{2(1-\mu)}{1+\mu}}\frac{\kappa^2}{\rho^2}\right\}
\end{aligned} \tag{20}$$

From Eq. (5)

$$m = \rho\,\overline{m} = \rho\sqrt{z} \tag{21}$$

and defining α and β so that

$$\begin{aligned}
m_{1-4} &= \pm\rho\sqrt{v_1 \pm i\psi_1} = \pm\alpha_1 \pm \beta_1\cdot i \\
m_{5-8} &= \pm\rho\sqrt{v_2 \pm i\psi_2} = \pm\alpha_2 \pm \beta_2\cdot i
\end{aligned} \tag{22}$$

one obtains

$$\begin{aligned}
\alpha_1 &= \rho\sqrt{0.5\,(\sqrt{v_1^2+\psi_1^2}+v_1)} \\
\beta_1 &= \rho\sqrt{0.5\,(\sqrt{v_1^2+\psi_1^2}-v_1)} \\
\alpha_2 &= \rho\sqrt{0.5\,(\sqrt{v_2^2+\psi_2^2}+v_2)} \\
\beta_2 &= \rho\sqrt{0.5\,(\sqrt{v_2^2+\psi_2^2}-v_2)}
\end{aligned} \tag{23}$$

To find the roots in DISCHINGER's characteristic equation will then require the following steps of calculation.

1. Calculating ρ and κ from Eq. (4)
2. Calculating $v_{1.2}$ and $\psi_{1.2}$ from Eq. (20)
3. Calculating $\alpha_{1.2}$ and $\beta_{1.2}$ from Eq. (23)

According to Eq. (2) the deflections are found to be

$$w = [e^{-\alpha_1 \varphi}\{A_1 \cos\beta_1 \varphi + A_2 \sin\beta_1 \varphi\} + e^{-\alpha_2 \varphi}\{A_3 \cos\beta_2 \varphi + A_4 \sin\beta_2 \varphi\} + e^{-\alpha_1 \omega}\{A_1' \cos\beta_1 \omega + A_2' \sin\beta_1 \omega\} + e^{-\alpha_2 \omega}\{A_3' \cos\beta_2 \omega + A_4' \sin\beta_2 \omega\}] \sin\lambda \frac{x}{a} \tag{24}$$

and similarly for u and v.

ω and φ are shown in fig. 1.

It should be noted that this paper concerns disturbances from the straight edges. A similar solution of the characteristic equation for the circumferential edges does apparently not exist.

3. Accuracy of the formulas

The differences between the exact v- and ψ-values and those calculated from Eqs. (20) are readily found to be less than $\frac{\kappa^2}{2\rho^4}$.

Only in the case of a very long shell will this value be $> 10^{-5}$. For the purpose of studying the effect on β due to an inaccuracy in ψ it is assumed that the calculations have given

$$\psi' = \psi + \Delta \tag{a}$$

where ψ is the exact value and Δ is a small corrective quantity.

From Eqs. (23) and (a) one has

$$\beta' = \rho \sqrt{0.5\,(\sqrt{v^2 + (\psi')^2} - v)}$$
$$\approx \rho \sqrt{0.5\,(\sqrt{v^2 + \psi^2 + 2\Delta \cdot \psi} - v}$$

The following rough approximations for v and ψ may be obtained from Eqs. (20)

$$v = \psi = \tfrac{1}{2}\sqrt{2} \tag{b}$$

after which

$$\beta \approx \rho \sqrt{0.5\,(\sqrt{\tfrac{1}{2} + \tfrac{1}{2}} - \tfrac{1}{2}\sqrt{2})} \approx \underline{0.4\,\rho} \tag{c}$$

hence

$$\beta' \approx \rho \sqrt{0.5\,(\sqrt{v^2 + \psi^2 + \Delta \cdot \psi} - v)}$$
$$= \rho \sqrt{0.5\,(\sqrt{v^2 + \psi^2} - v) + \frac{\Delta \cdot \psi}{2}}$$
$$\approx \rho \sqrt{0.5\,(\sqrt{v^2 + \psi^2} - v)} + \frac{\Delta \cdot \psi}{4\beta}\rho \tag{d}$$

The combination of Eqs. (b), (c) and (d) yields

$$\beta' \approx \beta + 0.45\,\Delta \cdot \rho \tag{26}$$

where β is the correct value of the root, while β' is inaccurate due to the discrepancy Δ, Eq. (a).

A corresponding effect is found from an inaccuracy in v.

4. Discussion of the characteristic equation

Several more or less approximate methods of shell analyses have been advanced in the last two decades. These methods lead to various characteristic equations, and each of those may be solved explicitly in the same manner as shown above.

The solutions of several of the best known equations are tabulated below. (Table I.)

LUNDGREN [4] has found that for most of the shells κ will vary within the limits

$$\kappa = 0.015\,(\rho \pm 2)$$

For the sake of convenience, the discussion is therefore based on the average value

$$\kappa = 0.015\,\rho$$

A. FINSTERWALDER'S characteristic equation [1] reads

$$\begin{aligned} m^8 + m^6\,[2-\lambda^2\,(2+\mu)] + m^4\,[1-\lambda^2\,(4+2\,\mu)+\lambda^4\,(1+2\,\mu)] \\ + m^2\,[-\lambda^2\,(2+\mu)+\lambda^4(1+\mu)^2-\mu\,\lambda^6] + \lambda^4\,\frac{1-\mu^2}{k} = 0 \end{aligned} \tag{27a}$$

When introducing the definitions in Eqs. (4) and (5) one gets

$$\begin{aligned} \overline{m}^8 + \left[\frac{2}{\rho^2} - (2+\mu)\,\kappa\right]\overline{m}^6 + \left[(1+2\,\mu)\,\kappa^2 - 2\,(2+\mu)\,\frac{\kappa}{\rho^2} + \frac{1}{\rho^4}\right]\overline{m}^4 \\ + \left[(1+\mu)^2\,\frac{\kappa^2}{\rho^2} - (2+\mu)\,\frac{\kappa}{\rho^4} - \mu\,\kappa^3\right]\overline{m}^2 + 1 - \mu^2 = 0 \end{aligned} \tag{27b}$$

The solution of this equation (given in Table I) shows a relatively important difference from that of DISCHINGER in $v_{1.2}$, characterized by the quantity.

$$d = \tfrac{1}{2}\,\sqrt{2}\cdot\sqrt{2}\,\frac{\kappa}{2} \equiv \frac{\kappa}{2}$$

From Table I one finds that the following expressions represent rough approximation for the smallest values of α and β.

$$\alpha = 0.39\left(1+\frac{\kappa}{2}\right)\rho$$

$$\beta = 0.39\left(1-\frac{\kappa}{2}\right)\rho$$

which combined with Eq. (26) yields the maximum percentage errors in the roots of Eq. (27).

$$d' = \frac{115\,\kappa}{2+\kappa}\,\%$$

Table I. List of v and ψ, Eq. (19)

Equation	$v_{1.2}$
DISCHINGER	$\pm\frac{1}{2}\sqrt{2}\left\{\sqrt[4]{1-\mu^2}+\frac{3}{4}(1-\mu^2)\frac{\kappa^2}{\rho^4}+\frac{1-\mu}{8}\frac{\kappa}{\rho^6}+\frac{1}{64\rho^8}+\left(\frac{1}{8\rho^4}+\frac{1-\mu}{2}\frac{\kappa}{\rho^2}\right)\pm\sqrt{2}\left(\kappa-\frac{1}{2\rho^2}\right)\right\}$
FINSTERWALDER	$\pm\frac{1}{2}\sqrt{2}\left\{\sqrt[4]{1-\mu^2}+\frac{1-\mu}{8}\kappa^2+\frac{1-2\mu}{64}\kappa^4-\frac{2-\mu}{32}\frac{\kappa^3}{\rho^2}-\frac{1+3\mu}{32}\frac{\kappa^2}{\rho^4}+\frac{2+\mu}{32}\frac{\kappa}{\rho^6}+\frac{1}{64\rho^8}+\left(\frac{1}{8\rho^4}+\frac{2+\mu}{8}\frac{\kappa}{\rho^2}\right)\pm\sqrt{2}\left(\frac{2+\mu}{4}\kappa-\frac{1}{2\rho^2}\right)\right\}$
AAS-JAKOBSEN	$\pm\frac{1}{2}\sqrt{2}\left\{1+\frac{5}{8}\frac{\kappa}{\rho^6}-2\frac{\kappa^2}{\rho^4}+2\frac{\kappa^3}{\rho^2}+\frac{1}{64\rho^8}+\left(\frac{1}{8\rho^4}+\frac{\kappa}{2\rho^2}\right)\pm\sqrt{2}\left(\kappa-\frac{1}{2\rho^2}\right)\right\}$
LUNDGREN	$\pm\frac{1}{2}\sqrt{2}\left\{\sqrt[4]{1-\mu^2}+\frac{\mu}{16}\frac{\kappa}{\rho^6}+\frac{1}{8}(1-2\mu-\mu^2)\frac{\kappa^2}{\rho^4}-\frac{1-\mu^2}{4}\frac{\kappa^3}{\rho^2}+\frac{1}{64\rho^8}+\left(\frac{1}{8\rho^4}+\frac{\mu}{4}\frac{\kappa}{\rho^2}\right)\pm\sqrt{2}\left(\kappa-\frac{1}{2\rho^2}\right)\right\}$
JENKINS	$\pm\frac{1}{2}\sqrt{2}\left\{1\pm\sqrt{2}\,\kappa\right\}$
ZERNA	$\pm\frac{1}{2}\sqrt{2}\left\{\sqrt[4]{1-\mu^2}\pm\sqrt{2}\,\kappa\right\}$
SCHORER	$\pm\frac{1}{2}\sqrt{2}$
Equation	**$\psi_{1.2}$**
DISCHINGER	$\frac{1}{2}\sqrt{2}\left\{\sqrt[4]{1-\mu^2}+\frac{3}{4}(1-\mu^2)\frac{\kappa^2}{\rho^4}+\frac{1-\mu}{8}\frac{\kappa}{\rho^6}+\frac{1}{64\rho^8}-\left(\frac{1}{8\rho^4}+\frac{1-\mu}{2}\frac{\kappa}{\rho^2}\right)\mp\sqrt{\frac{2(1-\mu)}{1+\mu}}\cdot\frac{\kappa^2}{\rho^2}\right\}$
FINSTERWALDER	$\frac{1}{2}\sqrt{2}\left\{\sqrt[4]{1-\mu^2}-\frac{1-\mu}{8}\kappa^2+\frac{1-2\mu}{64}\kappa^4-\frac{2-\mu}{32}\frac{\kappa^3}{\rho^2}-\frac{1+3\mu}{32}\frac{\kappa^2}{\rho^4}+\frac{2+\mu}{32}\frac{\kappa}{\rho^6}+\frac{1}{64\rho^8}-\left(\frac{1}{8\rho^4}+\frac{2+\mu}{8}\frac{\kappa}{\rho^2}\right)\mp\frac{\sqrt{2}}{4\sqrt{1-\mu^2}}\left[(1+\mu)\frac{\kappa^2}{\rho^2}-\frac{2-\mu}{8}\mu^2\kappa^3\right]\right\}$
AAS-JAKOBSEN	$\frac{1}{2}\sqrt{2}\left\{1+\frac{5}{8}\frac{\kappa}{\rho^6}-2\frac{\kappa^2}{\rho^4}+2\frac{\kappa^3}{\rho^2}+\frac{1}{64\rho^8}-\left(\frac{1}{8\rho^4}+\frac{\kappa}{2\rho^2}\right)\mp\sqrt{2}\left(\frac{\kappa}{\rho^4}-\frac{\kappa^2}{\rho^2}\right)\right\}$
LUNDGREN	$\frac{1}{2}\sqrt{2}\left\{\sqrt[4]{1-\mu^2}+\frac{\mu}{16}\frac{\kappa}{\rho^6}+\frac{1}{8}(1-2\mu-\mu^2)\frac{\kappa^2}{\rho^4}-\frac{1-\mu^2}{4}\frac{\kappa^3}{\rho^2}+\frac{1}{64\rho^8}-\left(\frac{1}{8\rho^4}+\frac{\mu}{4}\frac{\kappa}{\rho^2}\right)\mp\frac{\sqrt{2}}{4}\frac{3-\mu^2}{\sqrt{1-\mu^2}}\frac{\kappa^2}{\rho^2}\right\}$
JENKINS	$\frac{1}{2}\sqrt{2}$
ZERNA	$\frac{1}{2}\sqrt{2}\sqrt[4]{1-\mu^2}$
SCHORER	$\frac{1}{2}\sqrt{2}$

Introducing $\kappa = 0.015\rho$ one gets

$$\underline{d' = \frac{0.86\rho}{1+0.0075\rho}\,\%}$$

The error d' as a function of ρ is given in Fig. 3.

It is evident that FINSTERWALDER'S equation is very unsatisfactory for short shells, say for $\rho > 5$.

B. AAS-JAKOBSEN. The characteristic equation is [3]

$$\begin{aligned}\overline{m}^8 &+ \left[\frac{2}{\rho^2} - 4\kappa\right]\overline{m}^6 + \left[\frac{1}{\rho^4} - 8\frac{\kappa}{\rho^2} + 6\kappa^2\right]\overline{m}^4 \\ &+ \left[-8\frac{\kappa}{\rho^4} + 14\frac{\kappa^2}{\rho^2} - 4\kappa^3\right]\overline{m}^2 + \kappa^4 + \frac{\kappa^2}{\rho^4} + 1 = 0\end{aligned} \tag{28}$$

The solution of this equation differs from that of DISCHINGER'S mainly in ψ, and the error is characterized by

$$d = \frac{\kappa}{\rho^4} - 2\frac{\kappa^2}{\rho^2} = 0.015\left(\frac{1}{\rho^3} - 0.03\right)$$

which yields

$$d' = \frac{1.73\left(\frac{1}{\rho^3} - 0.03\right)}{1-0.0075\rho}\,\%$$

Fig. 3 shows that Eq. (28) is very accurate for all types of shells.

C. LUNDGREN [4] has tabulated the roots of DISCHINGER'S characteristic equation. However, on the basis of some approximate assumptions he also establishes the following equation.

$$\begin{aligned}\overline{m}^8 &+ \left[\frac{2}{\rho^2} - 4\kappa\right]\overline{m}^6 + \left[\frac{1}{\rho^4} - (6+\mu)\frac{\kappa}{\rho^2} + 6\kappa^2\right]\overline{m}^4 \\ &+ \left[-(2+\mu)\frac{\kappa}{\rho^4} + (3+2\mu+\mu^2)\frac{\kappa^2}{\rho^2} - 4\kappa^3\right]\overline{m}^2 + \left[-\mu\frac{\kappa^3}{\rho^2} + \kappa^4\right] + 1 - \mu^2 = 0\end{aligned} \tag{29}$$

For $\mu = 0$ the numerical errors in v and ψ will be

$$d = \tfrac{1}{2}\sqrt{2}\,\frac{\kappa}{2\rho^2} = \frac{\sqrt{2}}{4}\,\frac{\kappa}{\rho^2}$$

corresponding to a percentage error equal to

$$d' = \frac{0.89}{\rho(1-0.0075\rho)}\,\%$$

This is also a very satisfactory result.

D. JENKINS [5] has succeeded in finding a very simple approximate characteristic equation:

$$\left(\frac{m^2}{\lambda^2} - \eta\right)^4 + 4 = 0 \tag{30}$$

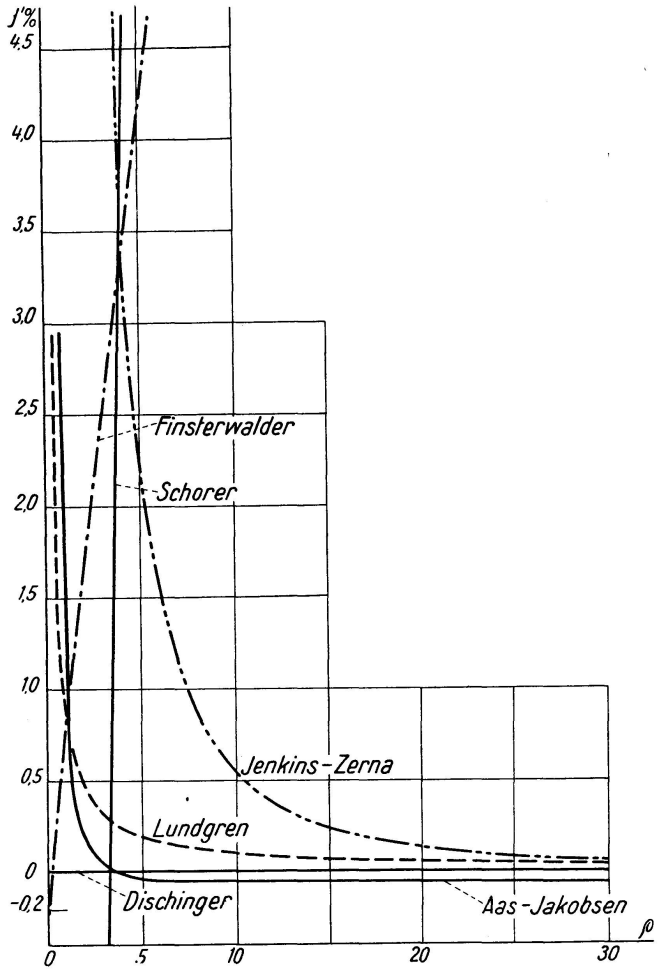

Fig. 3. The maximum error in α and β as function of ρ ($\kappa = 0{,}015\,\rho$).

where
$$\eta = \frac{n\pi}{l}\sqrt{\frac{a\,d}{\sqrt{3}}}$$
$$\lambda = \sqrt{\frac{n\pi}{l}\sqrt{\frac{\sqrt{3}}{a\,d}}}$$

This equation is easily solved explicitly [5] and the solution is here brought into accordance with the other solutions of this paper, see Table I.

The numerical error is defined by the quantity

$$d = \frac{1}{2\rho^2}$$

which corresponds to the percentage error

$$d' = \frac{58}{\rho^2(1+0.0075\,\rho)}\,\%$$

Fig. 3 shows that JENKINS' equation is very satisfactory for short shells, especially when considering its simple form. And even for long shells this solution may appear to be satisfactory.

E. ZERNA [6] introduces a stress-function and arrives in a very interesting way at the following characteristic equation of the fourth degree:

$$m^4 - 2\left(\frac{n\pi\varphi_0 a}{l}\right)^2 m^2 + \left(\frac{\varphi_0 a}{l}\right)^4 (n\pi)^2 \left[(n\pi)^2 + \frac{i l^2 \sqrt{12(1-\mu^2)}}{a d}\right] = 0 \tag{31}$$

where φ_0 is shown in Fig. 1, and $i = \sqrt{-1}$.
For $\mu = 0$ the solution of Eq. (31) is identical with JENKINS' solution, as is shown in Table I. Therefore the conclusions drawn under point D also applies to Eq. (31).

F. SCHORER. The equation given by SCHORER is well known

$$\overline{m}^8 + 1 = 0 \tag{32}$$

and has a very simple solution which, however, is approximately correct only in the particular case where

$$\sqrt{2}\left(\kappa - \frac{1}{2\rho^2}\right) = 0$$

Substituting $\kappa = 0.015\rho$ one gets

$$\rho = 3.2, \quad \kappa = 0.048$$

which corresponds to a rather long shell.

In this particular case the numerical error in the solution of SCHORER's equation is of the magnitude

$$d = \frac{\sqrt{2}}{4}\frac{\kappa}{\rho^2} \approx \underline{0.0012}$$

For shorter shells the error will be characterized by the following quantity

$$d = \tfrac{1}{2}\sqrt{2}\cdot\sqrt{2}\left(\kappa - \frac{1}{2\rho^2}\right) = \kappa - \frac{1}{2\rho^2}$$

corresponding to the percentage error

$$d' = \frac{\left(1.73 - \frac{58}{\rho^3}\right)\rho}{1 + 0.0075\rho}\,\%$$

Eq. (32) is approximately correct only in the very small interval $2.5 < \rho < 4$, see Fig. 3.

Conclusions

On the basis of the study above one may conclude that all equations under discussion, except those of FINSTERWALDER and SCHORER give sufficiently accurate results for most of the shell types. The equations given by FINSTERWALDER and SCHORER yield reasonable values of the roots for very long shells. However, in such cases it is sufficiently accurate to use the more elementary methods of calculation, for instance the beam analogy as described by LUNDGREN [4].

The roots, m, of the characteristic equation define the dampening of the disturbances from the edges of a shell (see Eq. 24) and to a large extent these

roots influence the magnitude of the moments and forces, which are found by differentiating the deflection formulas. Since

$$\frac{\delta^n}{\delta \varphi^n} e^{m\varphi} = m^n e^{m\varphi}$$

it is evident that an inaccurate value of m will cause increased inaccuracies in the calculation of moments and forces. It is therefore advisable to calculate the roots as accurately as possible, even if the rest of the analyses is carried out in accordance with one of the more simplified methods.

By means of the procedure proposed in this paper the numerical work involved calculating accurate roots of the characteristic equations is reduced to a minimum.

References

1. Flügge, W.: „Statik und Dynamik der Schalen." Julius Springer, Berlin 1934.
2. Dischinger, Fr.: „Die strenge Theorie der Kreiszylinderschale und ihre Anwendung auf die Zeiß-Dywidag-Schalen." Beton und Eisen, Heft 16, 1935.
3. Aas-Jakobsen, A.: „Über das Randstörungsproblem an Kreiszylinderschalen." Der Bauingenieur, Heft 29/30, 1939.
4. Lundgren, H.: "Cylindrical Shells." Vol. I. Copenhagen 1949.
5. Jenkins, R. S.: "Theory and Design of Cylindrical Shell Structures." London 1947.
6. Zerna, W.: „Zur Berechnung der Randstörungen kreiszylindrischer Tonnenschalen." Ingenieur-Archiv B. 20, H. 5, 1952.
7. Hütte: Des Ingenieurs Taschenbuch. Verlag von Wilhelm Ernst und Sohn, Berlin 1941. I. Band.

Summary

Fr. Dischinger has presented the exact characteristic equation for the cylindrical shell in Beton und Eisen, No. 16, 1935. However, the nummerical calculation of the roots as indicated by Dischinger is laborious and very sensitive against inaccuracies.

The author has succeeded in finding a set of roots in explicit form. These roots are very accurate and the numerical calculation is reduced to a minimum.

At the end of this paper the solutions of several approximate characteristic equations (Finsterwalder, Aas-Jakobsen and Lundgren) are for the first time given in explicit form and the accuracy of these equations is discussed. Also the solutions of Jenkins, Zerna and Schorer are compared to those mentioned above. It is shown that for all practical purposes the methods of Aas-Jakobsen, Lundgren, Jenkins and Zerna are of sufficient accuracy. However, the moments and forces in the shell depend to a large degree upon the roots of the characteristic equation, and it is of importance to calculate these roots as accurate as possible. It should therefore be reasonable to apply the exact solution given in the present paper, also in combination with calculations which are carried out in accordance with some of the other theories mentioned above.

Résumé

Les équations exactes et caractéristiques des voiles minces cylindriques ont été établies dans „Beton und Eisen" Nr. 16, 1935, par Fr. Dischinger. Cependant, le calcul numérique des solutions selon la méthode Dischinger exige beaucoup de temps et se révèle très sensible à des inexactitudes.

L'auteur a réussi à mettre les racines sous forme explicite. Celles-ci sont très exactes et les calculs numériques sont réduits à un minimum. Cet exposé contient la forme explicite des solutions de quelques équations approchées caractéristiques (Finsterwalder, Aas-Jakobsen et Lundgren); l'exactitude de ces équations y est également discutée.

Les solutions de Jenkins, Zerna et Schorer y sont comparées et montrent que les méthodes de Aas-Jakobsen, Lundgren, Jenkins et Zerna donnent des résultats suffisamment exacts.

Toutefois, les moments fléchissants et les forces dans le voile dépendent dans une large mesure des solutions des équations caractéristiques; il est donc nécessaire de les calculer aussi exactement que possible.

Il est dès lors indiqué de calculer avec les solutions exactes décrites dans cet exposé, tout en utilisant les calculs selon une des méthodes décrites.

Zusammenfassung

Fr. Dischinger veröffentlichte die genaue charakteristische Gleichung für zylindrische Schalen in Beton und Eisen Nr. 16, 1935. Die numerische Berechnung der Lösungen nach der Methode Dischinger erfordert aber sehr viel Zeit und ist auch sehr empfindlich gegen Ungenauigkeiten.

Dem Verfasser ist es gelungen, die Wurzeln der Gleichung in expliziter Form darzustellen. Diese sind sehr genau und die numerische Berechnung wird dabei auf ein Minimum reduziert.

Am Ende dieses Aufsatzes werden zum ersten Male die expliziten Lösungen von einigen angenäherten charakteristischen Gleichungen (Finsterwalder, Aas-Jakobsen und Lundgren) gegeben und gleichzeitig die Genauigkeit dieser Gleichungen besprochen. Ebenso werden die Lösungen von Jenkins, Zerna und Schorer mit den oben genannten verglichen. Dabei zeigt sich, daß für alle praktischen Zwecke die Methoden von Aas-Jakobsen, Lundgren, Jenkins und Zerna eine ausreichende Genauigkeit liefern. Die Momente und Kräfte in der Schale sind aber stark abhängig von den Lösungen der charakteristischen Gleichung, so daß es notwendig ist, diese so genau als möglich zu berechnen.

Es wäre daher ratsam, die genaue Lösung anzuwenden, wie sie in diesem Aufsatz beschrieben wurde, auch in Verbindung mit Berechnungen, die nach einer der oben genannten Theorien ausgeführt wurden.