Zeitschrift: IABSE congress report = Rapport du congrès AIPC = IVBH Kongressbericht

Band: 13 (1988)

Artikel: Behavior and design of semi-rigid composite frames

Autor: Leon, Roberto T.

DOI: https://doi.org/10.5169/seals-13069

Nutzungsbedingungen

Die ETH-Bibliothek ist die Anbieterin der digitalisierten Zeitschriften auf E-Periodica. Sie besitzt keine Urheberrechte an den Zeitschriften und ist nicht verantwortlich für deren Inhalte. Die Rechte liegen in der Regel bei den Herausgebern beziehungsweise den externen Rechteinhabern. Das Veröffentlichen von Bildern in Print- und Online-Publikationen sowie auf Social Media-Kanälen oder Webseiten ist nur mit vorheriger Genehmigung der Rechteinhaber erlaubt. Mehr erfahren

Conditions d'utilisation

L'ETH Library est le fournisseur des revues numérisées. Elle ne détient aucun droit d'auteur sur les revues et n'est pas responsable de leur contenu. En règle générale, les droits sont détenus par les éditeurs ou les détenteurs de droits externes. La reproduction d'images dans des publications imprimées ou en ligne ainsi que sur des canaux de médias sociaux ou des sites web n'est autorisée qu'avec l'accord préalable des détenteurs des droits. En savoir plus

Terms of use

The ETH Library is the provider of the digitised journals. It does not own any copyrights to the journals and is not responsible for their content. The rights usually lie with the publishers or the external rights holders. Publishing images in print and online publications, as well as on social media channels or websites, is only permitted with the prior consent of the rights holders. Find out more

Download PDF: 24.01.2026

ETH-Bibliothek Zürich, E-Periodica, https://www.e-periodica.ch

Behavior and Design of Semi-Rigid Composite Frames

Comportement et dimensionnement de cadres mixtes semi-rigides

Verhalten und Bemessung von Verbund-Rahmen mit teilweise steifen Verbindungen

Roberto T. LEON
Assist. Professor
University of Minnesota
Minneapolis MN, USA

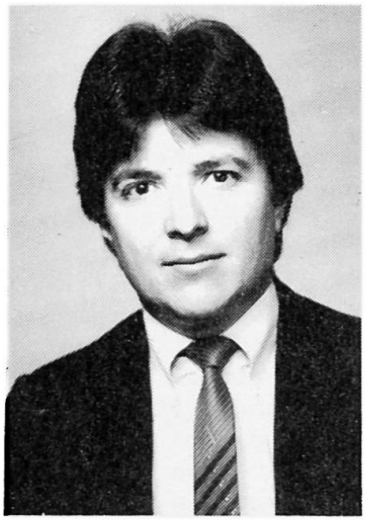

Roberto Leon received his Ph.D. from the University of Texas at Austin in 1983. He is currently engaged in research on connections for composite structures and on seismic design of concrete and steel structures.

SUMMARY
The use of composite construction can lead to substantial gains in stiffness and strength in semi-rigid connections. The strength and continuity provided by the reinforcing bars in the floor slab and the additional stiffness provided by the floor diaphragm make semi-rigid composite construction an ideal structural system for braced and unbraced frames up to nine stories. The results of an experimental series, design guidelines, and a sample design for this type of structure are discussed in this paper.

RÉSUMÉ
L'emploi d'une construction mixte peut permettre des gains substantiels en rigidité et en résistance dans les liaisons semi-rigides. La résistance et la continuité procurées par des barres d'armature dans une dalle et la rigidité supplémentaire procurée par le diaphragme du plancher font de la construction mixte semi-rigide un système de construction idéal pour des constructions en treillis ou non, allant jusqu'à neuf étages. Les résultats de ces expériences, directives de projet et un exemple d'avant-projet pour ce type de structure sont exposés.

ZUSAMMENFASSUNG
Die Verbund-Konstruktion mit teilweise steifen Verbindungen kann die Traglast und die Rahmensteifigkeit erheblich vergrössern. Die Tragfähigkeit und die durchlaufende Betonarmierung in der Deckenplatte, und die zusätzliche Steifigkeit der durchlaufenden Deckenplatte, machen eine solche Bauweise besonders geeignet für bis zu neunstöckige Rahmen. Dieser Artikel beschreibt die Ergebnisse eines Versuchsprogrammes. Entwurfs-Vorschläge und Entwurfs-Beispiele werden ebenfalls gegeben.

I. INTRODUCTION

The use of semi-rigid construction has been hampered in the past by lack of simple analytical techniques and design guidelines [1]. Connections in steel structures have been idealized as either perfectly rigid or free to rotate for ease of calculation and simplicity in design. It has long been recognized that even the connections that are assumed to be free to rotate actually possess a limited moment capacity and initial stiffness, but these are seldom utilized in design [2]. A new type of structural system, labelled semi-rigid composite construction, is under development to increase and better utilize this strength and stiffness.

2. SEMI-RIGID COMPOSITE CONSTRUCTION

The idea behind semi-rigid composite construction is to improve the performance of a relatively weak steel connection, such as the top and seat angle (Fig. 1a), by replacing the top angle with a composite slab (Fig. 1b). The non-composite connection is relatively weak because the top angle will yield under a combination of flexural and tensile forces at a load considerably lower than the tensile capacity of either angle leg. The composite system replaces the weak element (top angle) with a fully composite slab incorporating small diameter bars continuous across the column lines. Under gravity loading the system offers increased moment capacity and stiffness primarily because the steel will yield in almost pure tension, and can be considered to be fully effective if the reinforcing bars are placed close to the column lines. Additional capacity is available also because the moment arm is increased and the yield strength of the reinforcing bars is greater than that of the structural steel.

Three recent events have made the use of this additional capacity attractive to designers in the U.S. The first is the issuance of ultimate strength design code [3] which divides connections into fully restrained (FR Type) or partially restrained (PR Type), implicitly recognizing the "semi-rigid" behavior of even the weakest connections. The second is the advent of the microcomputer into the designer's office and the availability of a large amount of design software and finite element analysis packages. This has made possible, with a moderate effort, the calculation of the forces and deformations for frames with connections idealized as linear or non-linear springs. The third is the increased use of composite floor systems for buildings in the five to twenty-storey range. These systems provide savings in materials and dead loads, permitting the increase of clear spans and the reduction of floor heights.

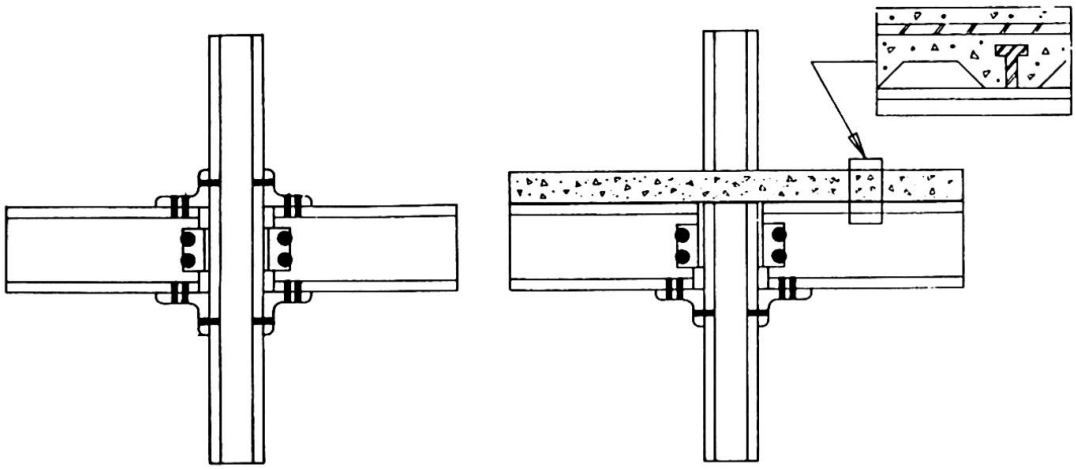

(a) Non-composite connection **(b) Composite connection**

Figure 1. Typical non-composite and composite connections

3. CONNECTION BEHAVIOR

A typical comparison between a composite and non-composite connection is presented in Fig. 2, which shows a large increase in initial stiffness and ultimate strength. An important advantage of the system is that the non-linear moment-rotation curve can be easily represented by a bi-linear model. This results in considerable savings in computation time, as well as in a simplified design procedure for checking strength under ultimate loads and deflections and drifts under service loads.

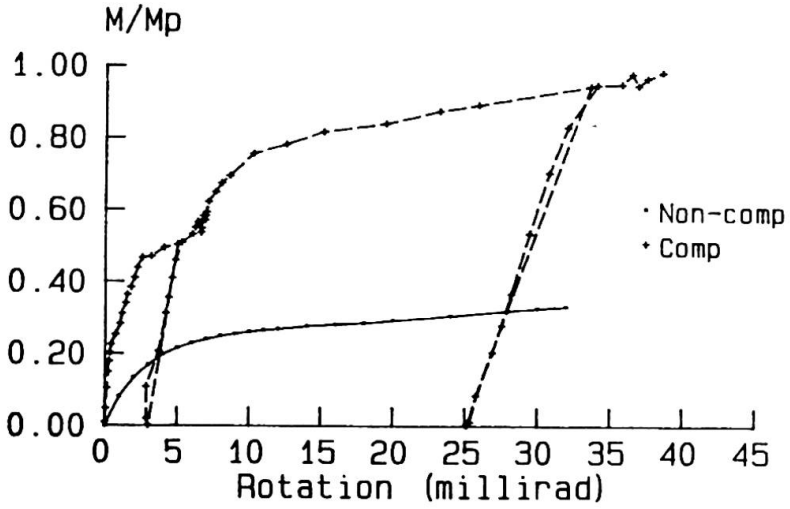

Figure 2 - Typical moment-rotation curves.

If the connection is subjected to lateral loads such as those arising from wind or earthquakes, an interior connection is still able to transfer large moments and provide adequate drift control (Fig. 3). In this case, the connection on one side of the column will be loading along the monotonic curve, while the other side is unloading along a branch parallel to the initial curve. While the stiffness of the left connection is decreasing, that of the right connection becomes equal to the initial stiffness due to the unloading. If the load reversals occur before the curve becomes highly non-linear the structure will be perfectly capable of carrying the loads without excessive drifts. Similar behavior can be obtained from exterior connections provided the slab is extended beyond the column line and adequate anchorage for the slab reinforcement is present.

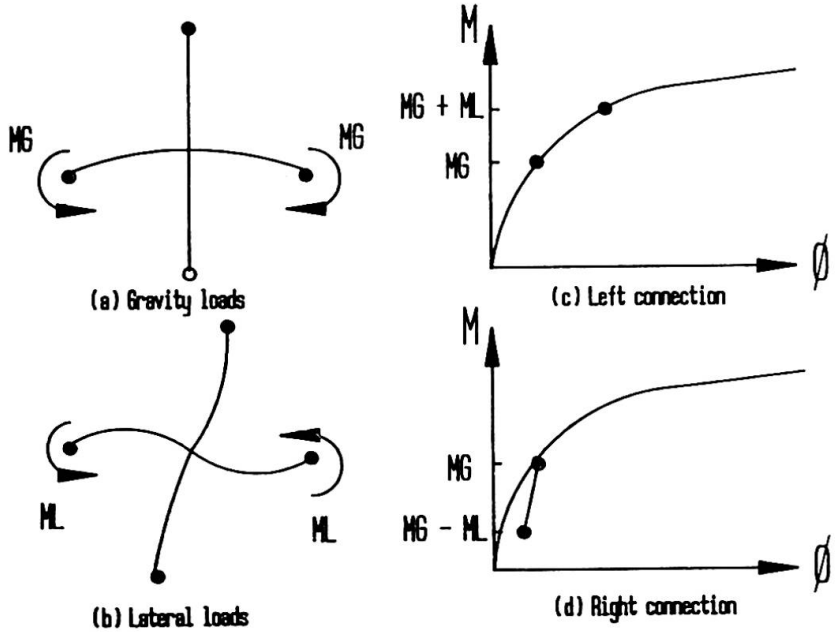

Figure 3 - Behavior of semi-rigid connection under gravity and lateral loads.

The additional cost of the system comes from the slab steel and the shear connectors necessary to insure full composite action. Since shear connectors are already being used in most floor systems and slab steel is commonly utilized to control cracking across column lines, the additional cost for this system is relatively minor compared to the gains in strength and stiffness.

Thus, semi-rigid composite construction can be used in areas where wind loads govern lateral load design and where seismic loads are low to moderate. It could also be used as a backup structural system in areas of large seismic exposure such as the western U.S. and some areas of southern Europe. The thrust of the project described herein deals with the effects of lateral loads on semi-rigid composite construction.

4. EXPERIMENTAL PROGRAM

Over the past three years a large-scale experimental research program has been carried out at the University of Minnesota to investigate the behavior of semi-rigid composite structures. The program included tests of three cruciform specimens simulating interior connections under monotonic and cyclic loading as well as the testing of a full-scale one-storey, two-bay frame subassemblage. The details for these tests are given in Refs. 4-5. Only some of the results for one test will be used here to illustrate the behavior of an interior connection. The details of one of the specimens along with a moment-rotation curve are shown in Fig. 4. The total specimen size was about 4 m by 6 m.

The specimen was loaded with a cyclic displacement at the bottom of the column equal to 0.1, 0.25, 0.5, 0.75, 1.0, 1.5, 2.0 and 3.0 percent storey drift. The behavior was elastic up to 0.75% storey drift, and the cracks in the slab were small until the 1.0% drift level was reached. Very little deterioration with cycling is observable until the 3.0% level was reached in the negative direction. At ultimate the connection achieved about 67% of the plastic moment capacity of the steel beam plus reinforcing bars in the downward direction, and about 58% of the capacity of the composite section in the upward direction.

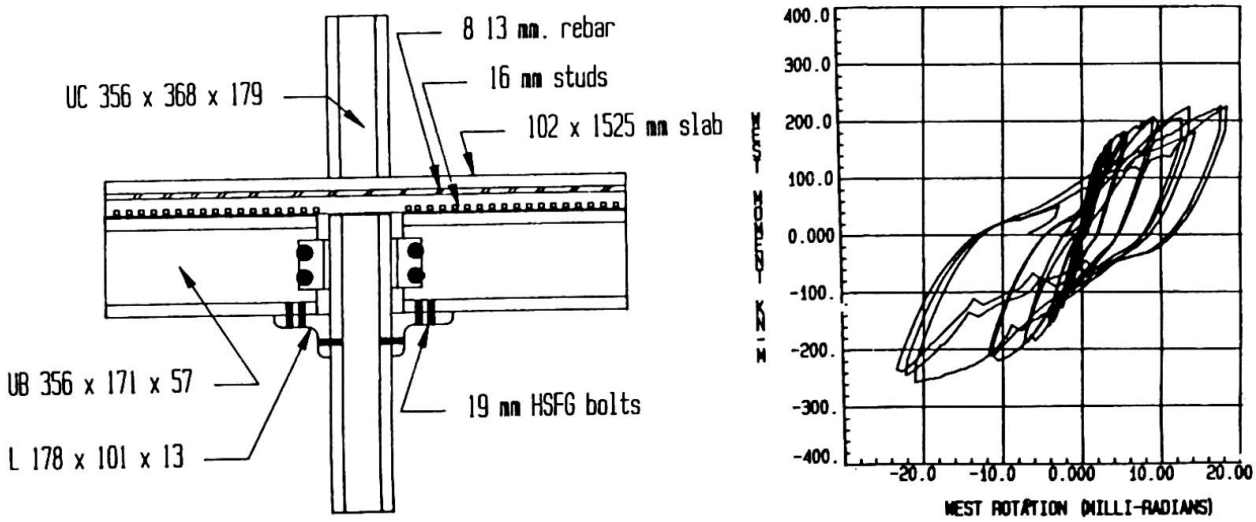

(a) Specimen details (b) Moment-rotation curve

Figure 4 - Typical specimen tested and resulting moment-rotation curve.

5. DESIGN METHODOLOGY

The design for a semi-rigid composite frame can be carried out by following the currently available criteria for Type 2 connections in allowable stress design [6] or the procedures recently proposed by Ackroyd [7]. In summary, they entail:

- Size the beams assuming ends free to rotate and based on the larger of (1) unfactored dead plus live or (2) construction loads. In general construction loads are assumed to be twice the service dead load and will govern the beam size.
- Size the columns assuming the connections are rigid and based on the larger of (1) factored gravity loads (dead plus live) or (2) factored lateral plus unfactored gravity loads. The first set of loads will provide the maximum axial loads and the latter the maximum moments. The columns should be designed as beam-columns to simultaneously satisfy both sets of forces. This will ensure that second order effects will not dominate the design.
- Analyze the structure obtained utilizing a program incorporating linear springs, and determine forces at the connection at ultimate.
- Detail connections for gravity load by providing enough slab steel within a strip equal to five times the column flange to satisfy the following equation:

$$M_n = 0.66\ A_s\ F_y\ D$$

  where M_n is the nominal ultimate moment, A_s is the area of the steel in the slab, F_y is the yield strength of the steel, and D is the distance between the slab steel and the centroid of the bottom angle.
- If the lateral loads are not sufficient to overcome the gravity load moments, detail the seat angle to have an area equal to the bottom beam flange.
- If the lateral loads overcome the gravity load moments, size the bottom angle so the force in the leg along the beam is half of the yield force in tension, but not less than the area of the bottom beam flange.
- Provide enough bolts in the bottom angle to prevent slip of the connection and use minimum gage distances in both legs of the angle.
- Provide web cleats to carry the entire shear force.

6. DESIGN EXAMPLE

To demonstrate the capabilities of semi-rigid composite construction, a two-storey, three bay frame was designed utilizing the connection described in Section 4 and the experimental moment-rotation curves. The column spacing was 7.62 m and the floor heights were 4.57 m. Frames were assumed on a 6.1 m spacing. The loads were those prescribed by ANSI A58 [9]. Two plastic design load combinations were used: 1.3 (dead + live + wind) and/or 1.7 (dead + live).

The initial design exceeded the required strength, and the drift at ultimate was H/310. This was considered adequate for drift at ultimate since it satisfied the H/400 commonly assumed in the U.S. for service load design. The failure, however, was by a sway mechanism due to plastic hinge formation in the columns in the bottom storey. This was considered undesirable, and the column sizes were increased to force the formation of hinges in the beams. This required increasing the column sizes from the initial UB 254 x 146 x 33 (W10x22) exterior and UB 254 x 146 x 39 (W10x26) interior, to UB 254 x 203 x 58 (W10x 39) for all columns in the final design (Fig. 5a). Because the columns were small stiffners were provided in the column to minimize panel zone distorsions.

A comparison of the lateral load at the top of the structure vs. the total sway is shown in Fig. 5b. The design load was 13 KN, and both the rigid and semi-rigid structure exceeded this by at least a factor of 60%. The behavior

was very similar up to the design load, where the sway for the semi-rigid structure was H/450. After that the semi-rigid structure began to sway more, but even at ultimate the sway was only H/163. The structures were analyzed using a modified version of a program by Lui [8] which accounts for both the non-linear connection behavior and the stability of the structure.

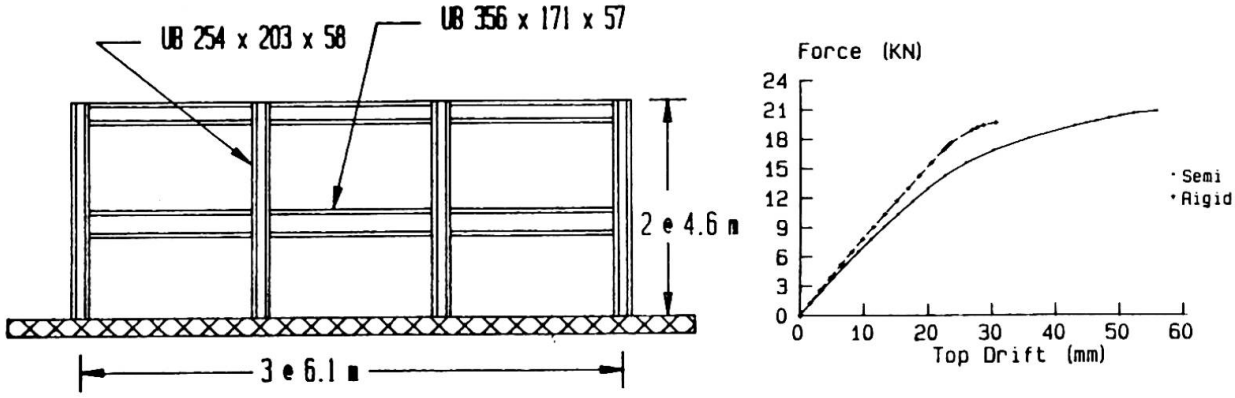

(a) Design example (b) Comparison of drift

Figure 5 - Design example and comparison of drift for rigid and semi-rigid.

7. CONCLUSIONS

This experimental investigation indicates that composite semi-rigid frames offer an attractive and economical solution to braced and unbraced construction up to eight or nine stories. The cost and labor for the additional reinforcing bars, shear studs, and analysis time required are more than offset by the simplicity of construction and the magnitude of the gains in strength and stiffness.

ACKNOWLEDGEMENTS

This research was made possible through the generous financial support of the American Institute of Steel Construction.

REFERENCES

[1] Jones, S.W., Kirby, P.A. and Nethercot, D.A., The Analysis of Frames with Semi-Rigid Connections - A State-of-the-Art Report. Journal of Constructional Steel Research, Vol. 3, No. 2, 1983.
[2] Johnson, R.P., and Law C.L.C., Semi-Rigid Joints for Composite Frames in Joints in Structural Steelwork (Howlett,J.H., et al, eds.). John Wiley & Sons, New York, 1981.
[3] American Institute of Steel Construction, LRFD Manual of Steel Construction. First Edition, AISC, Chicago, 1986.
[4] Ammerman, D., and Leon, R.T., Behavior of Semi-Rigid Composite Connections. AISC Engineering Journal, Second Quarter, June 1987.
[5] Leon, R.T., Semi-Rigid Composite Steel Frames. AISC Engineering Journal, Fourth Quarter, December 1987.
[6] American Institute of Steel Construction, Steel Construction Manual. Eighth Edition, AISC, Chicago, 1980.
[7] Ackroyd, M.H., Simplified Frame Design of Type PR Construction. Proceedings of the National Engineering Conference, New Orleans, AISC, April 1987.
[8] Lui, E.M., and Chen, W.F. Modelling of Structures with Semi-Rigid Connections. Computer and Structures, Vol. 26, No. 5, 1987.