Bridge construction under severe natural climatic conditions in the USSR

Autor(en): **Safonov, V.N. / Silin, K.S. / Solovyev, G.P.**

Objekttyp: **Article**

Zeitschrift: **IABSE congress report = Rapport du congrès AIPC = IVBH Kongressbericht**

Band (Jahr): **12 (1984)**

PDF erstellt am: **27.04.2024**

Persistenter Link: https://doi.org/10.5169/seals-12120

Nutzungsbedingungen

Die ETH-Bibliothek ist Anbieterin der digitalisierten Zeitschriften. Sie besitzt keine Urheberrechte an den Inhalten der Zeitschriften. Die Rechte liegen in der Regel bei den Herausgebern.
Die auf der Plattform e-periodica veröffentlichten Dokumente stehen für nicht-kommerzielle Zwecke in Lehre und Forschung sowie für die private Nutzung frei zur Verfügung. Einzelne Dateien oder Ausdrucke aus diesem Angebot können zusammen mit diesen Nutzungsbedingungen und den korrekten Herkunftsbezeichnungen weitergegeben werden.
Das Veröffentlichen von Bildern in Print- und Online-Publikationen ist nur mit vorheriger Genehmigung der Rechteinhaber erlaubt. Die systematische Speicherung von Teilen des elektronischen Angebots auf anderen Servern bedarf ebenfalls des schriftlichen Einverständnisses der Rechteinhaber.

Haftungsausschluss

Alle Angaben erfolgen ohne Gewähr für Vollständigkeit oder Richtigkeit. Es wird keine Haftung übernommen für Schäden durch die Verwendung von Informationen aus diesem Online-Angebot oder durch das Fehlen von Informationen. Dies gilt auch für Inhalte Dritter, die über dieses Angebot zugänglich sind.

Ein Dienst der *ETH-Bibliothek*
ETH Zürich, Rämistrasse 101, 8092 Zürich, Schweiz, www.library.ethz.ch

http://www.e-periodica.ch

Bridge Construction under Severe Natural Climatic Conditions in the USSR

Construction de ponts dans les régions à climat rigoureux en URSS

Der Brückenbau in den Regionen der UdSSR mit harten Klimabedingungen

V.N. SAFONOV
Civil Engineer
Gosstroy
Moscow, USSR

K.S. SILIN
Dr. Sci.
All-Union Res. Inst. of Transp. Constr.
Moscow, USSR

G.P. SOLOVYEV
Dr. Sci.
Glavmostostroy, Min. of Transp. Constr.
Moscow, USSR

A.V. CHERNYSHOV
Civil Eng.
Glavtransproject, Min. of Transp. Constr.
Moscow, USSR

SUMMARY

The paper deals with the experience recently gained through engineering design and construction of bridges in the North and East regions of the USSR. Scientific researches have formed the basis for the design solutions selected. Minimum environment disturbance, use of materials and structures of the required quality as well as elaboration of special technology for work execution make it possible to develop economically efficient structures of bridges and their approaches.

RESUME

Le rapport concerne l'expérience dans la construction des ponts dans les régions du nord et de l'est de l'URSS, accumulée ces dernières années. Les projets retenus sont basés sur des études scientifiques. Les dommages minima à l'environnement, l'utilisation de matériaux et de structures de bonne qualité ainsi que l'étude des techniques de réalisation des travaux permettent de créer des structures solides et fiables de ponts et de leurs accès, du point de vue économique.

ZUSAMMENFASSUNG

Im Vortrag wird die in den letzten Jahren in den nördlichen und östlichen Regionen der UdSSR gewonnene Erfahrung im Brückenbau erläutert. Als Grundlage der angenommenen Entwurfslösungen dienten die wissenschaftlichen Forschungen. Die minimale Störung der örtlichen Bedingungen, die Anwendung der Baustoffe und die geforderte Qualität der Konstruktionsart sowie die spezielle Entwicklung der Ausführungstechnologie gewährleisten das Schaffen von zuverlässigen und wirtschaftlichen Brückenkonstruktionen und deren Zufahrten.

1. INTRODUCTION

The major part of the USSR territory, especially Siberia, is characterized by long winter periods with low temperatures, unfavourable engineering and geological conditions and lack of good local communications. Duration of low temperature periods (up to -60°C and lower) amounts to 200 days a year. The ground is covered with snow from September-October till April-May.

Permafrost occupies almost half of the USSR territory. The depth of permafrost is between 0,5 m and 4-4,5 km, the thickness varies from a few meters to as much as 1.5 km. In some regions the areas are swampy, the mountaneous regions are characterized by seismic activity. Many streams and rivers freeze up to the bottom, some of them are covered by ice crust.

In such extremely difficult conditions bridges reliability, durability and efficiency can be achieved by the following measures:

- use of such pier structures the erection of which would slightly affect natural conditions; use of machines and mechanizms for work execution;
- use of more precast elements;
- reduction of material consumption by material strength and grade improvement;
- conversion of construction sites into erection ones.

In severe climate regions the most complex problem is to ensure reliability and durability of short span bridges and to increase essentially their efficiency by material and labour cost reduction. Such bridges amount to more than 90 % by quantity and more than 70 % by total length of all the bridges being built.

The route of Baikal-Amur railway with an overall length of over 3000 km crosses the areas unfavourable for construction, i.e. severe climate, mountaneous relief, frozen soils of various properties, icings, high seismicity, etc.

Low-alloy steels and frost-resistant concrete have been used to ensure the required bridge reliability. As to foundations, the introduction of new structures and methods of work execution, slightly affecting the natutal conditions, have ensured the foundation stability in permafrost. In particular, fill material instead of ground cut-off was used for construction site planning. Water accumulation in front of bridges and several water courses passage through one opening were not allowed.

During the period of mass construction of bridges new codes of practice for design and construction of bridge foundations in permafrost have been refined or developed.

Fig. 1. Construction of foundation pit for massive pier

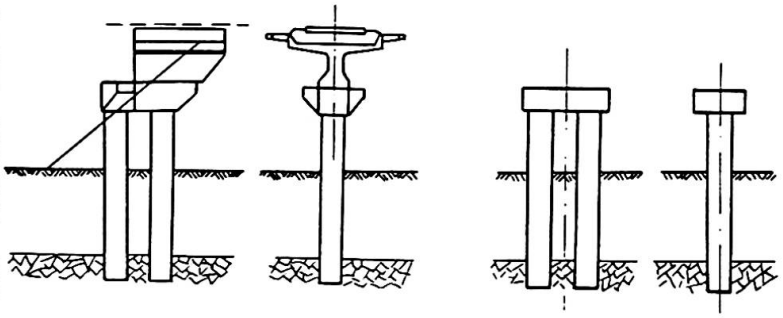

Fig. 2. Industrial construction of columnar pier

Fig. 3. Columnar piers bridge

Fig. 4. Completely precast columnar pier

2. BRIDGE PIERS

Traditional structures of piers with massive foundations appeared to be inadequately reliable and inefficient for BAM bridges. Such piers construction required much manual labour consumption for deep trenching to prevent the possibility of inadmissible pier settlement and inclination in case of frozen and ice saturated soils thawing. Occurence of such soils is usually at the depth of 5 m from the ground surface (Fig. 1).
Deep trenching required not only a great volume of earth and concrete works, but resulted in considerable disturbance of natural conditions. Due to the latter the force of frost heave increased and icings appeared in new places. All these factors could significantly reduce the reliability and durability of short span bridges. Moreover, the use of traditional piers couldn't ensure the completion of the project by the time fixed. Therefore, industrial structures of piers have been developed and widely used for short span bridges (Fig. 2).
Reinforced concrete columns of 0,8 m diameter were used as load bearing elements of these piers. They were sunk into holes predrilled in frozen and rock soils and on top integrated with precast cross beam. The superstructure and precast caps (for abutments) were placed directly on the latter (Fig. 3).

Every pier of short span bridge consists of up to 6 of such columns, being at the same time the members both of the foundation and the pier (Fig. 4).

The holes were bored by either percussion-churn drill (Fig. 5) or rotary drill (Fig. 6) depending on local ground conditions.

Precast members (columns, cross beams and caps) were manufactured at plants, delivered to the site by constructed railway section and then by road transport (Fig. 7). Piers were erected by general purpose cranes of 25-30 t capacity.

Cement-sandy grout was used for columns fixation in holes.
Columns and caps were cast in place by conventional methods (Fig. 8).

Use of columnar piers reduced concrete consumption by 2-4 times, cut down labour cost and shortened the erection period by 1,5-2 times and reduced the volume of earth works up to 10 times. All the above mentioned was achieved due to exclusion of foundation pit, use of precast elements and sharp reduction in concrete volume compared to the traditional piers.

The major part of BAM route crosses seismic regions with designed seismicity of 7 degree (measured on 12-degree scale).

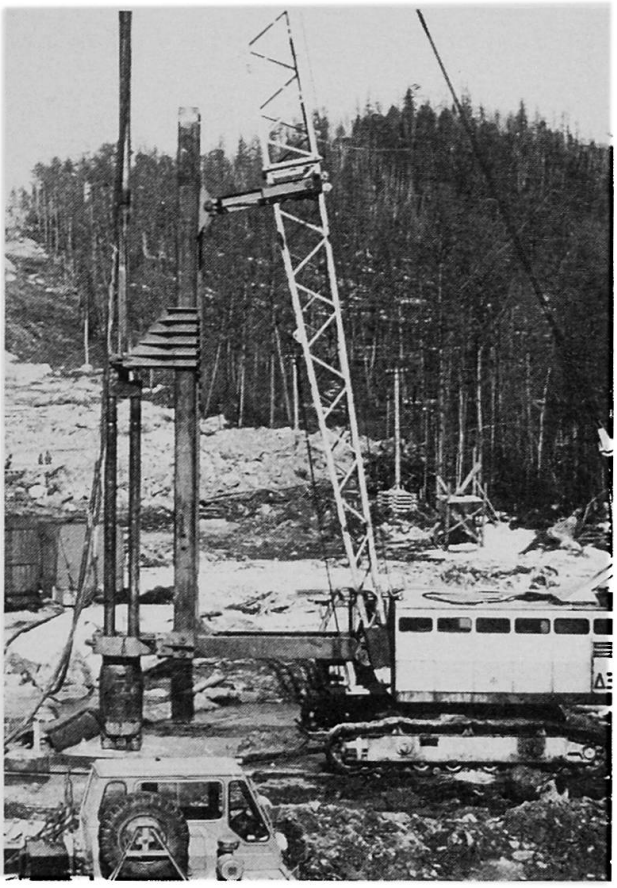

Fig. 6. Holes boring by rotary drill

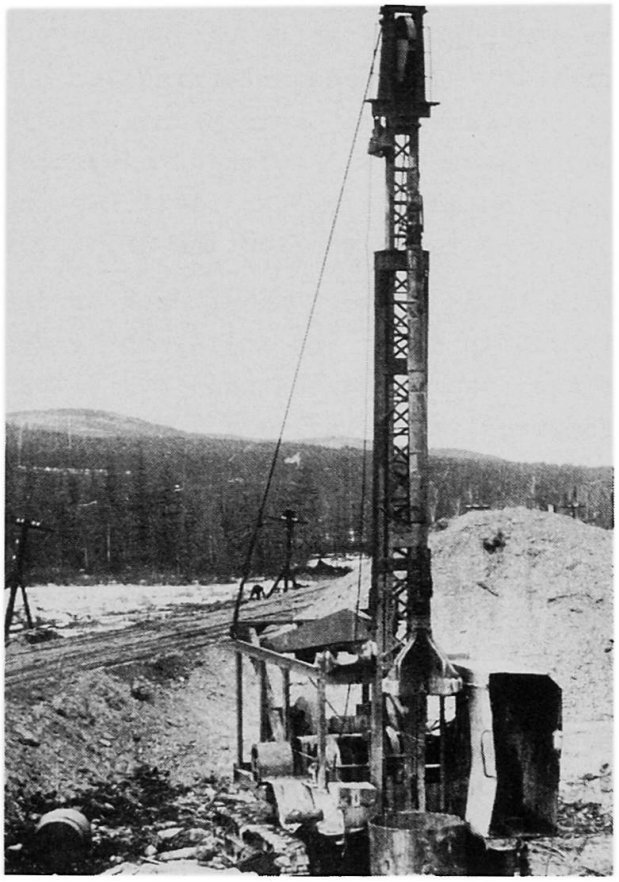

Fig. 5. Holes boring by percussion-churn drill

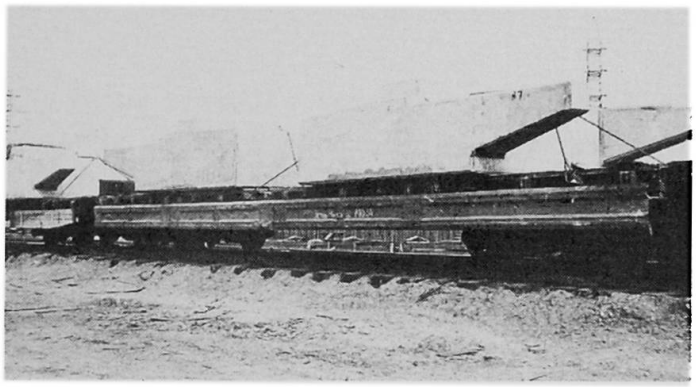

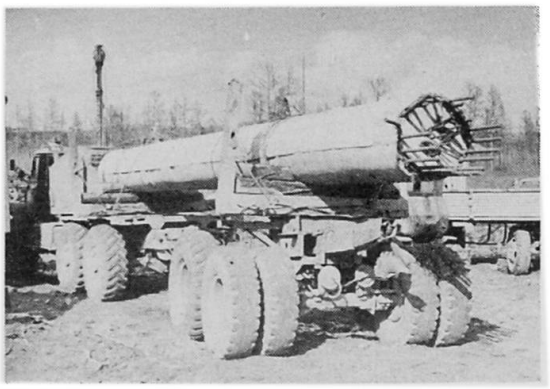

Fig. 7. a) Prefabricated pier members delivery by railway
b) Reinforced concrete columns delivery by road transport

A number of investigations have been conducted to increase bridge efficiency and high degree of reliability. Thus, the conditions for train springing rigidity have been determined.
At the same time basic principles for the design of bridge aseismic elements have been developed. A special construction of bearings and earthquake resistant bridge piers have been developed for more typical conditions of their application (Fig. 9).

More than 2000 short span bridges with columnar piers have been built in BAM in different soils. Thus, grounds were conserved in their frozen state, their bearing capacity being high in columns base carrying large compressive train loads (up to 3.5 MN) and pull out loads under the effect of frost heave forces (up to 1,5 MN) (Fig. 10).

Columnar piers are more reliable compared to traditional ones.
There have been not a single case of frost heave or such piers settlement in a great number of highway and BAM railway bridges, while at the same period inadmissible settlements and distortion of traditional piers with ordinary foundations have been observed in some bridges.

At the present time in connection with the Western Siberian fuel-power complex development highway and railway bridges are being extensively built in Western Siberia. Here permafrost extends from the Arctic circle to the North and is regarded as high-temperature. The climate is featured by long and cold winter (the temperature falls up to -60°C) and short and cold summer. Amounts of snow in the region are quite small. But permanent strong winds cause snow-drift accumulation in low-lands and near different obstructions such as road embankments and engineering structures. Such snow-drifts warm the area they cover and contribute to permafrost temperature rise and even to its full melting. This factor has been taken into account in the pier foundation design. The piers for these regions have been designed with due regard to the experience gained during BAM construction.

3.SUPERSTRUCTURES

Precast concrete has become the main building material for superstructures of BAM bridges with spans length up to 27 m. Superstructures without prestressing and meeting the requirements of standard design corrected for low temperature regions have been used for spans of up to 15 m length. Prestressed, superstructures 18.7;23.6 and 27,6 m long specially designed for the North conditions have been used for spans exceeding 15 m. The above superstructures consisting of twin girders are designed for seismic regions with earthquake magnitude up to 9.

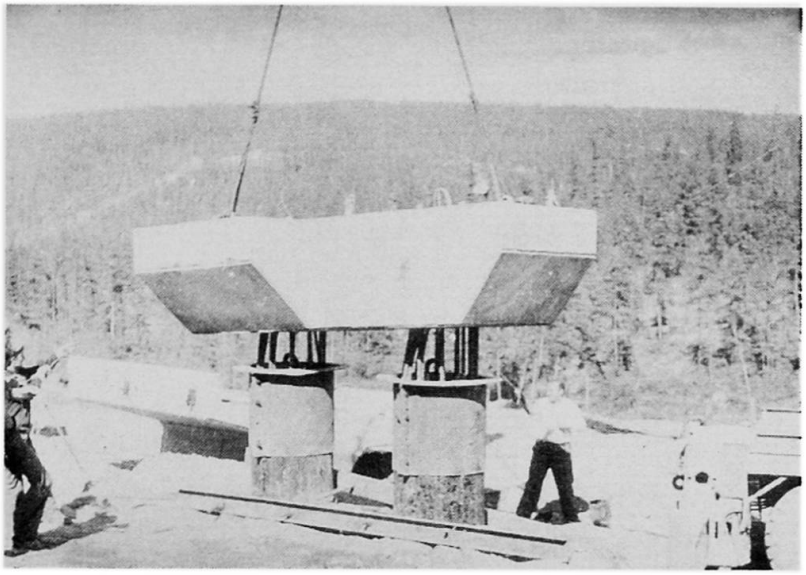

Fig. 8. Columns and caps casting

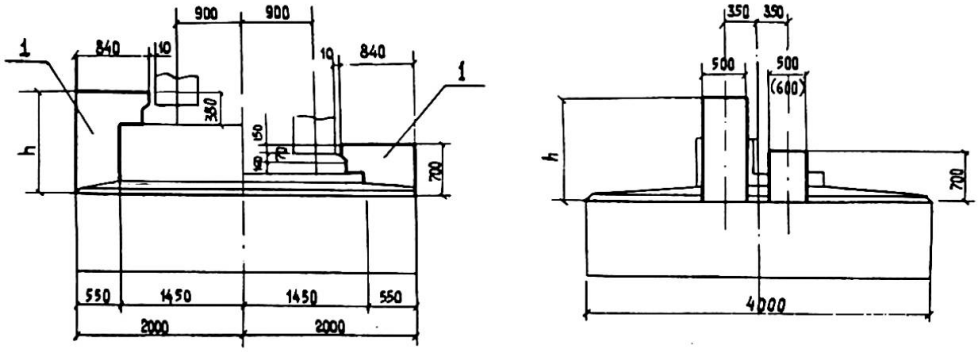

Fig. 9. Aseismic elements. 1 – stoppers

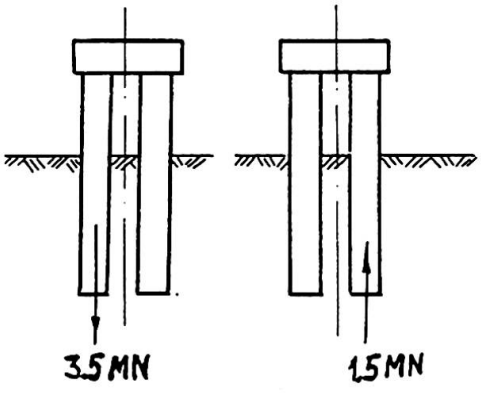

Fig.10. Pier loading scheme

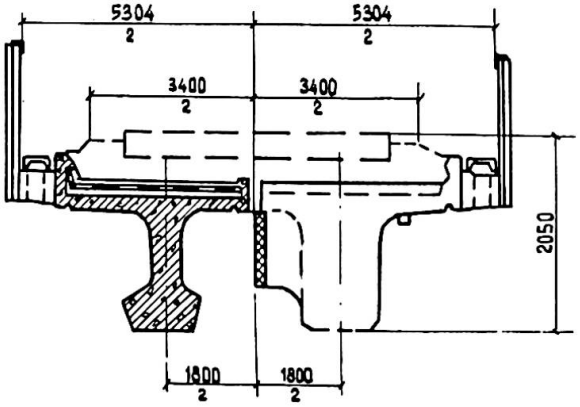

Fig.11. Railway bridge superstructures designed for the North conditions

Design temperature	– below -40°
Magnitude of earthquakes	– M – up to 9
Concrete class	– 400
Frost resistance	– 300

They carry one railway track on straight and curved sections, radius of curvature being 300 m and more. The width of ballast bed is 3.4 m (Fig. 11).

The superstructures considered are practically similar to those used in usual service conditions by their formwork dimensions, main prestressing reinforcement, method for prestressing. The difference is in the use of prestressed stirrups, made of high strength bar reinforcement, at the end girder sections, the use of reinforcing steel of special class and the application of special waterproofing materials and concrete of higher quality (Fig. 12).

Improved crack resistance of superstructures and their service reliability under extreme conditions have been achieved due to more precise analysis methods, use of cold-resistant materials and extra requirements for the technology of structures fabrication, their transportation and erection.

Steel consumption for prestressed concrete superstructures with 23.6 and 27.6 m spans designed for BAM conditions is 2.8-3 times less compared with steel superstructures, the cost of their plant fabrication being approximately the same. Their advantage in comparison with composite superstructures is in complete prefabrication, practically eliminating concrete "wet" works on construction site.

Riveted steel superstructures made up of hot rolled carbon steel have proved to be the best possible solution for the most severe conditions of old Trans-Siberian railway construction.

Refusal from rivetting and industry reorganization for manufacture of welded superstructures for the North conditions required a great deal of research and design work. The activity of researchers and designers has led to the following main results.

Only low alloy heat treated steels with yield point of 350-400 MPa are used as building material for welded superstructures.

All shop connections in steel bridges are being carried out by automatic submerged arc welding, while field connections, as a rule, - by high strength bolts (Fig. 13). However, there are examples of urban bridges built in Siberia (steel and composite box girders among them) where all-welded and composite bolted-welded joints have been used. In the latter case beam flanges are welded and webs are connected by plates on high strength bolts.

The main improved feature of railway truss bridge superstructures designed for the North conditions is elimination of breaks in deck and its composite action with main trusses.

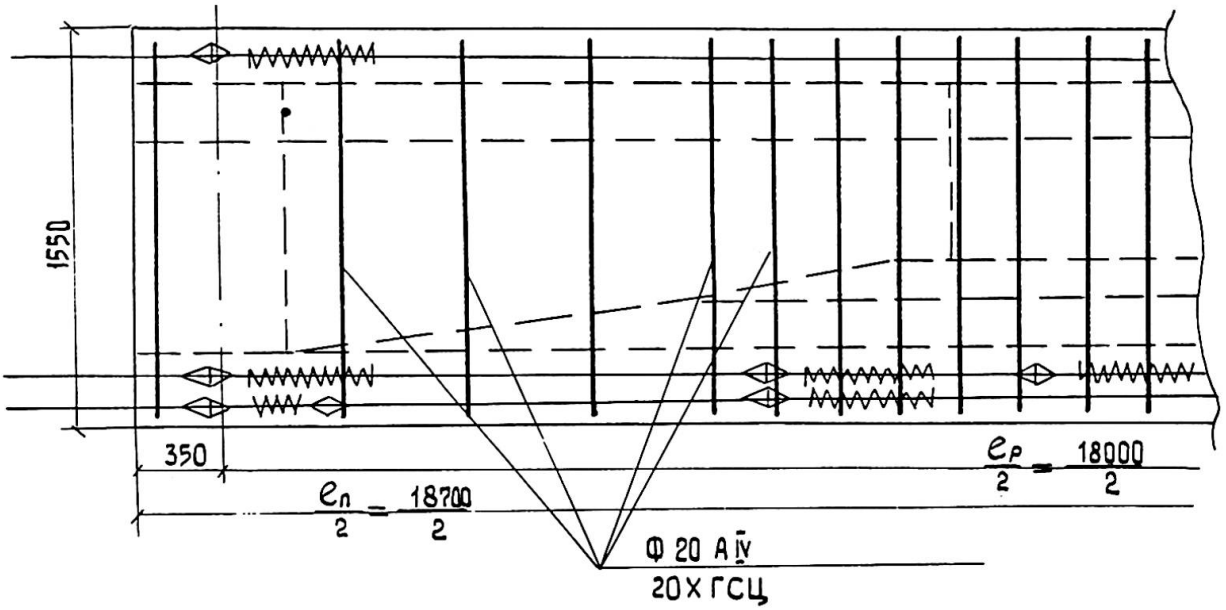

Fig.12. Reinforcement of superstructure

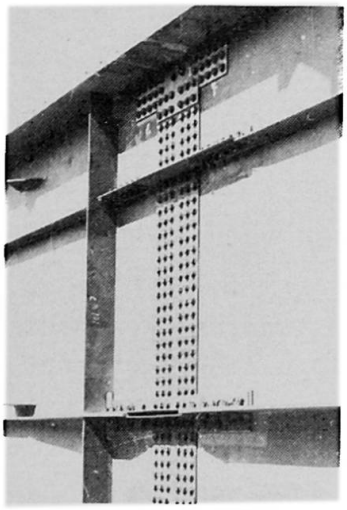

Fig.13. Superstructure field joint by means of high strength bolts

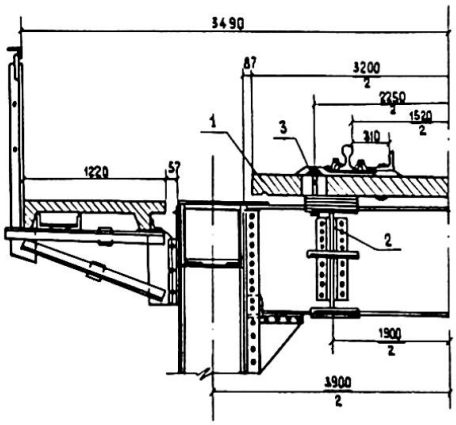

Fig.14. Deck elements connection by high strength bolts

1 – deck slab
2 – stringer
3 – high strength bolt

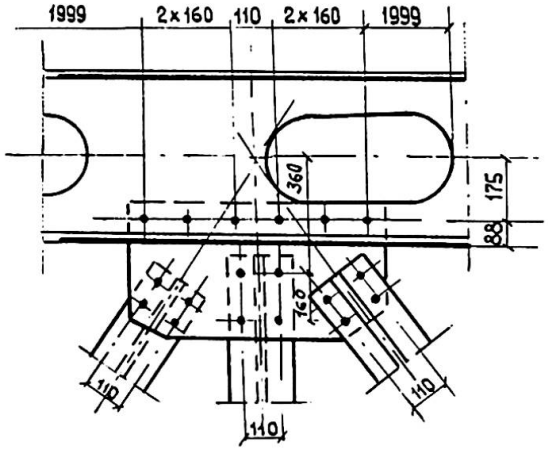

Fig.15. Bracings connection by high strength bolts

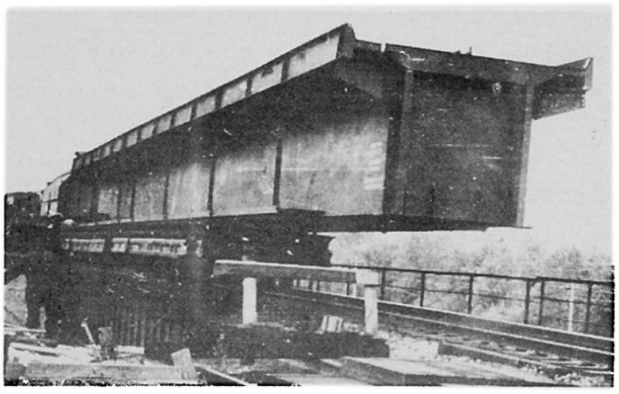

Fig.16. Box girder superstructure coated with stainless steel protecting ballast bed from corrosion

For this purpose the procedures for three-dimensional analysis of these structures have been developed (Fig. 14).

Special precautions against stress concentrators in superstructures designed for the North conditions have been made. As a result fastening of connecting joint plates and elements of main trusses and deck bracing was carried out by means of high strength bolts (Fig. 15).

The analysis methods have been refined to ensure the equal strength of constructive elements. Thus, bending moments of stiffening joints have been taken into consideration in three-dimensional analysis. Endurance of all the elements, joints and details have been thoroughly checked.

Plate girder superstructures with ballasted floor have been considerably improved: integration of precast concrete slab with steel beams by means of high strength bolts and slab units glued connection have been introduced in composite superstructures; to avoid water-proofing repair in steel box girder superstructures the interior surface of ballast pocket was protected from corrosion by the stainless steel layer applied either when rolling or by metallizing methods (Fig. 16).

All these measures have made it possible to achieve high reliability of bolted-welded connections of superstructures for BAM and all-welded superstructures for urban bridges in Siberia.

4. EXAMPLES OF BRIDGES CONSTRUCTION

Two track bridge may serve as a typical example of railway bridges designed for the North conditions (Fig. 17). This deck bridge with superstructure made up of steel 15 XCHD has the scheme 4 x 66 m. The deck and main trusses are of composite action when ballastless tied track is used. Truss superstructures are composed of welded members field connected with high strength bolts.

Superstructures erection by cantilever method with the application of connecting elements was adopted for the most railway bridges similar by construction. Aseismic protection consists of shock absorbing springs in the superstructures upper bearings, superstructures hinged joints and edge stoppers from the both sides of the superstructures. Hinged joints prevent the latter from failure in the case of superstructure shift relative to piers (Fig. 18).

Side stoppers are designed for prevention of superstructure side displacement and tilting.

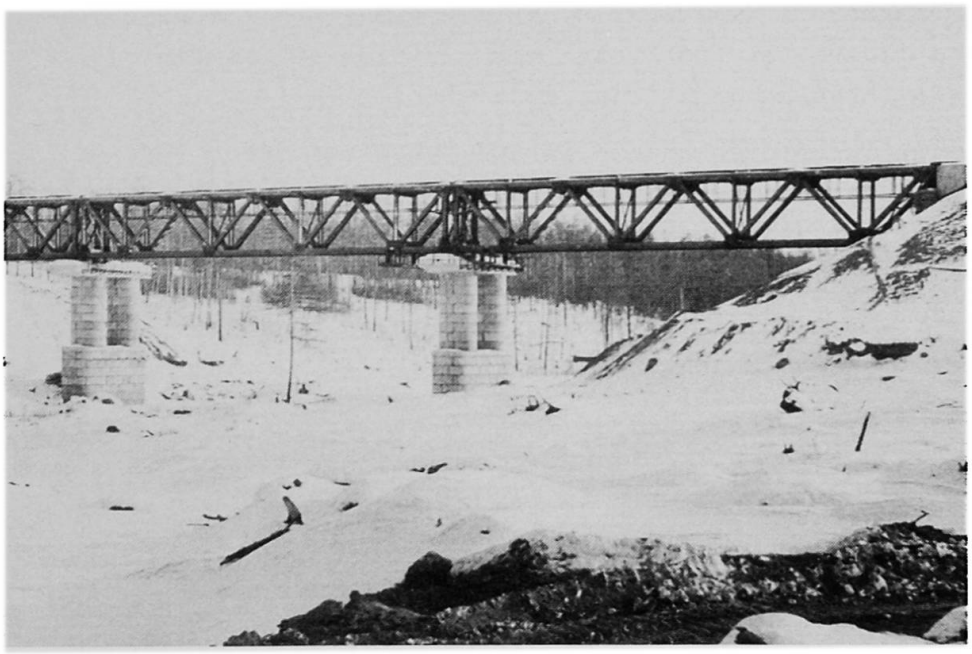

Fig.17. Truss deck bridge

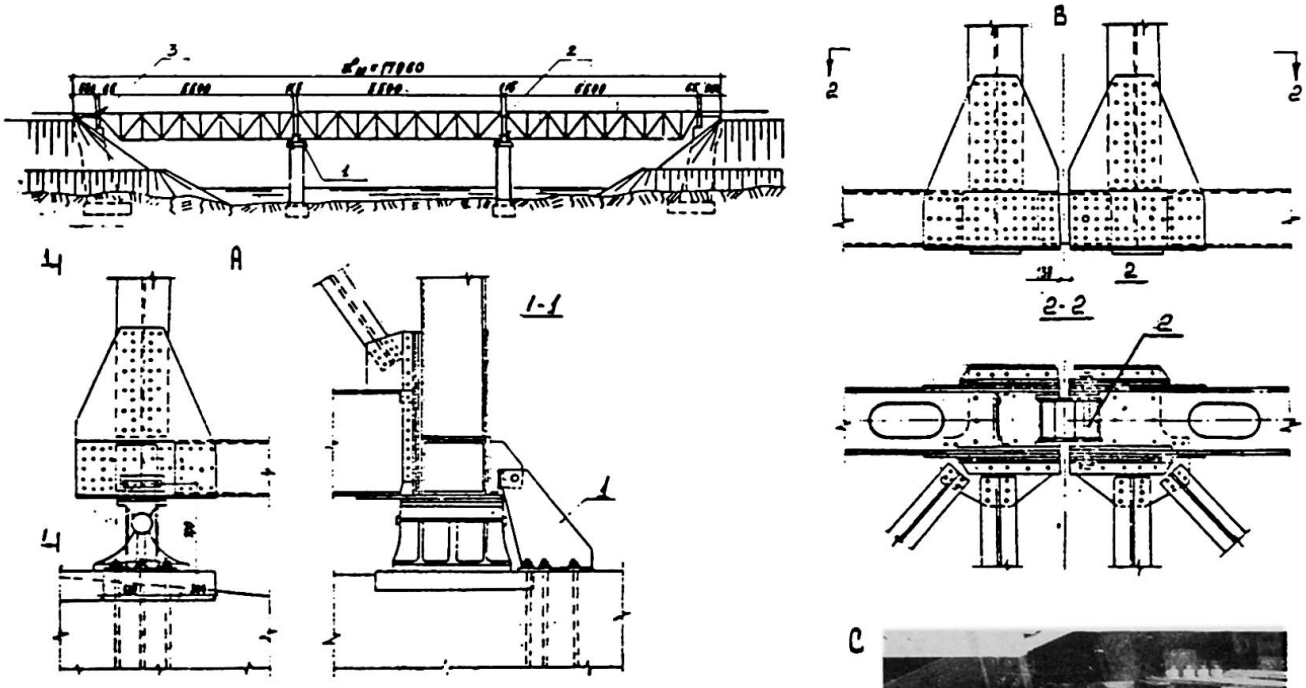

Fig. 18. Bridge aseismic devices

1 – truss bearings displacement stoppers
2 – bonding devices
3 – damping devices

A – Construction of bearing displacement stoppers

B – Bonding device

C – Damping device erection

Two-lane bridge of the scheme 12+2x87+2x159+4x87+12 and 9.0 m roadway, built over the river with severe ice phenomena, may serve as an example of highway bridges for the North regions (Fig. 19).

The deep channel section is bridges by continuous truss superstructure of 2 x 159 m. The prefabrication technology of the structure stipulated the use of conductor devices for railway superstructures.

The 159 m length of navigation spans was dictated by skew river crossing. Innavigable river section with 87 m long spans is bridged by continuous girder with solid web and orthotropic deck slab.

Steel 15 XCHD was used as building material for all spans. The yield point of the above steel is 350 MPa. Steel 10 XCHD was used for the heaviest members of 2 x 159 m continuous superstructures.

The erection of continuous superstructures was carried out by cantilever method. Bridge piers were placed on deep foundations made up of reinforced concrete 1.6 m diameter shells, except for superstructure central pier with foundation composed of inclined steel shells accounting for large channel depth. The depth of shells for the central pier is up to 50 m from low water level.

Some data on two urban bridges construction under North conditions are presented below.

The bridge design of one of them incorporates six-lane roadway of 22.5 m width and two pedestrian walkways of 2.25 m width. The bridge is built in seismic region with earthquake magnitude M=8. The river span is bridged by three-span (100.5+146.0+100.5 m) continuous steel box girder superstructure with orthotropic deck slab (Fig. 20).

The superstructure is of all welded construction. Its cross section consists of two boxes with the upper orthotropic deck slab and bottom ribbed slab made up of steel 10 XCHD hardenable by heat treatment, its yield point being 400 MPa (Fig. 21).

Steel superstructure was erected by cantilever method with the application of compound joints - high strength bolts were used for the web and butt welding for the flanges.

Deck pavement of steel superstructure consists of asphalt concrete layer of 7 cm thickness placed over epoxy-bitumen insulation layer. Sticking insulation with the application of bitumen was used for reinforced concrete approach spans.

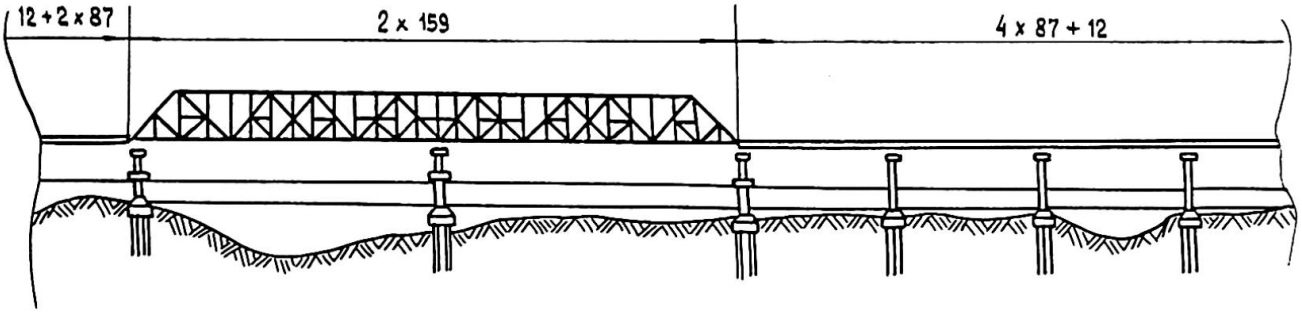

Fig.19. Highway bridge over the river with severe ice phenomena

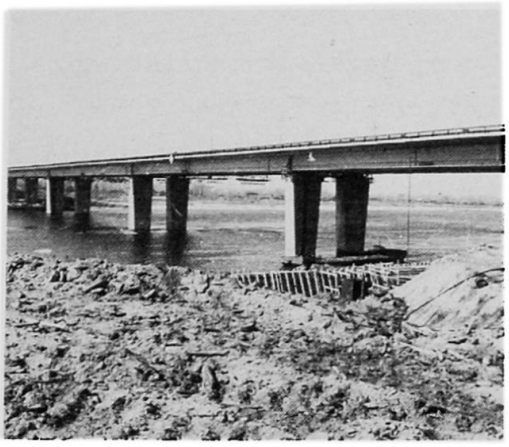

Fig.22. Continuous composite superstructure

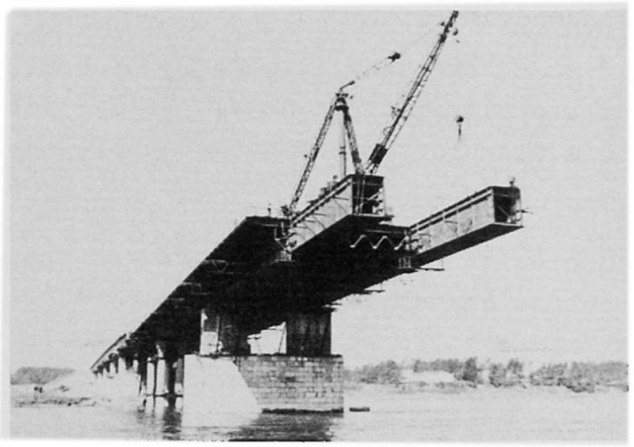

Fig.20. Continuous box girder superstructure with orthotropic deck slab

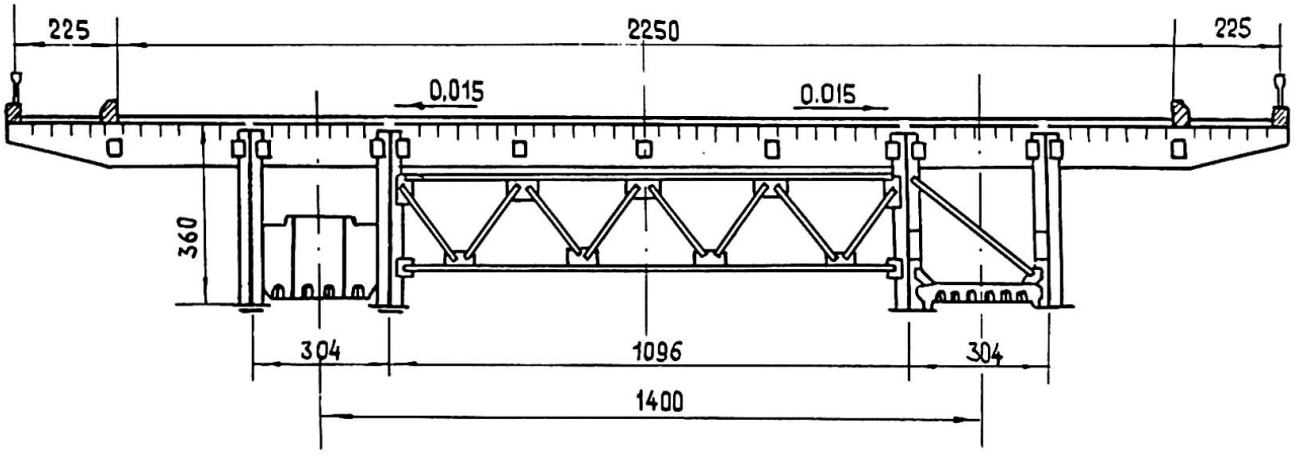

Fig.21. Box girder superstructure

The design of the second urban bridge incorporates six-lane roadway of 25.5 m overall width. Composite continuous superstructure consists of 6-span box girder with the longest span of 126 m (Fig. 22), made up of steel 10 XCHD, hardenable by heat treatment. Its yield point is 400 MPa.

Reinforced concrete slabs are of composite action with the main 3.3 m deep girders forming two boxes 7.0 m wide each (Fig. 23). Support sedtions of reinforced concrete deck are prestressed by wire strands, consisting of 48 wires of 5 mm diameter, with tensile strength of 1700 MPa.

Erection joints of main girders units of the length up to 29.8 m are of twc types:

a) compound ones, when webs are joined by high strength bolts and flanges - by butt welding;

b) all welded joints.

Waterproofing of the deck is made up of butil rubber, pavement consists of 7 cm thick asphalt concrete layer. Bridge piers rest on foundations composed of 1.6 m diameter reinforced concrete shells (Fig. 24).

5. BRIDGE APPROACHES

The junction point of abutment piers and approach embankments is considered to be important component of bridge crossings. Here, the proper conditions for smooth car traffic should be ensured. In this connection approach embankments should be designed accoding to the principle of permafrost level rise up to embankment foot as minimum (Fig. 25).

Such solution seems to be accessible when crushed stone - sandy soils are used for embankment bottom. Existing moss vegetative cover should be preserved in this case accounting for its action as natural heat insulating layer.

In the events when embankment height may be lowered accoding to the requirements for longitudinal profile designing, such lowering should be substantiated by thermal-technical analysis to prevent permafrost horizon from thawing and depression.

Placement of thermal insulating layer of either moss or peat, or some other material such as foam plastic, expanded polystyrene, etc. into embankment foot is considered to be additional measure preventing permafrost upper layer from melting. Moreover, the use of materials mentioned is more preferable as they make possible prevention of unfavourable effect of moss removal or peat mining on environment (vegetative cover).

The above measures being taken, pavement ultimate settlement not exceeding

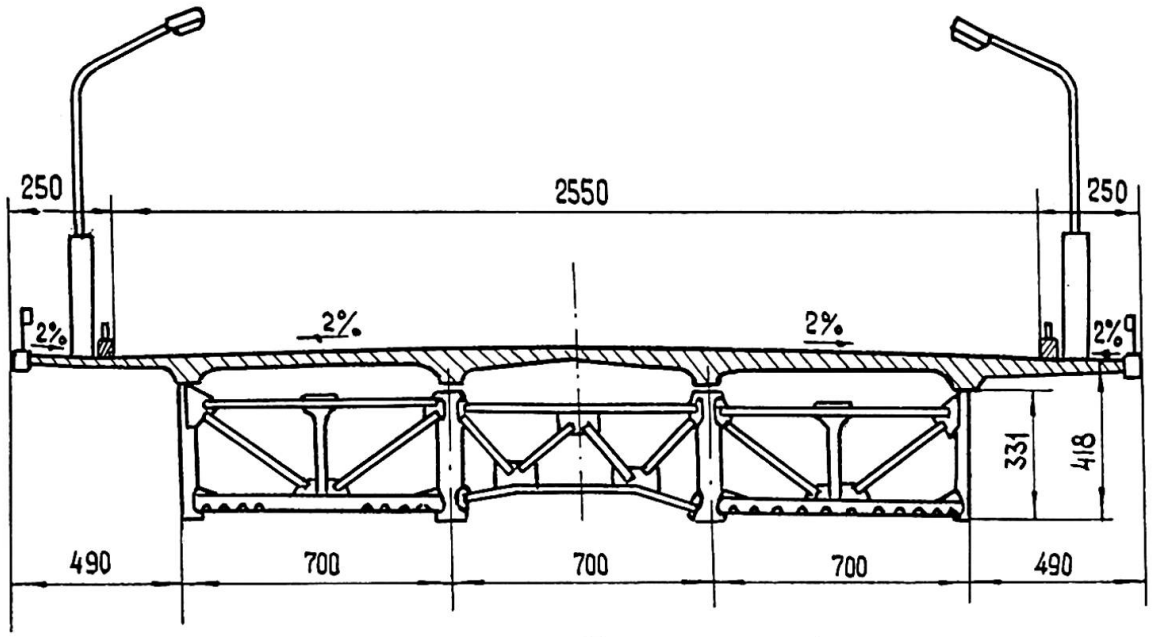

Fig.23. Box girder composite superstructure

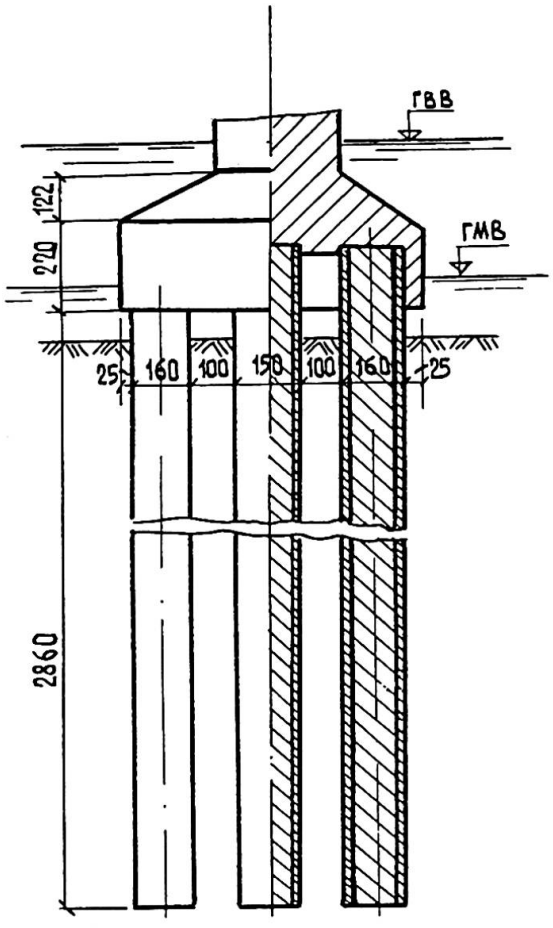

Fig.24. Bridge pier foundation made up of 1,6 m diameter shelled pile

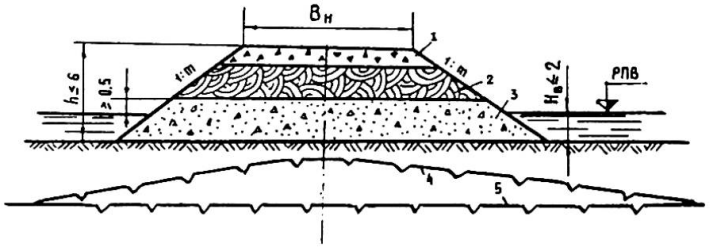

Fig.25. Cross section of approach embankment

1 – crushed stone or gravel
2 – clay soil
3 – noncemented fragmental soil
4 – permafrost upper horizon after
5 – permafrost upper horizon before embankment erection
РПВ – surface water design level

40 mm - for asphalt concrete covering and 20 mm - for cement covering would be ensured.

Pavement consisting of such materials as gravel, crushed stone,etc., settlements of up to 100 mm are admissible.

Careful check should be carried out for determination and design of embankment height to prevent its surface from snow accumulation. The check may be, for instance, made by the following formula:

$$H_{min} = K \cdot h_{sn} + K_1 \cdot \Delta h$$

where K - maximum snow depth local correction, h - maximum snow depth along the route to be designed, K_1 - local relief coefficient, Δh - minimum embankment elevation over snow cover of plain terrain.

Thus, great experience has been gained by the Soviet specialists through engineering design and construction of highway and railway bridges under severe climatic conditions in the North regions of the USSR. This experience has made it possible to develop more efficient bridge structures and industrial technology for their construction.

Requirements for steels used for bridges welded superstructures in different climatic regions according to the Codes of Practice of the USSR

Steel Grade	Thickness,mm	Mechanical properties of all grades steel in tension			Impact strength(J/cm^2) of below indicated steel grades at the following temperatures (°C)					Bending test in cold state up to sides parallelism for all grades steel
		Temporary tensile strength, MPa	Yield point, MPa	Relative elongation,%	1	2	3	1 and 2 after strain ageing	3 after strain ageing	
					-40	-60	-70	+20	-20	
					not less than					
15XCHD	8-32	500-700	350	21	30	30	30	30	30	d = 2a
	33-60	480-680	340	21	-	30	30	30	30	d = 2a
10XCHD	8-15	540-700	400	19	40	30	30	30	30	d = 2a
	16-32	540-680	400	19	-	30	30	30	30	d = 2a
	33-40	520-660	400	19	-	30	30	30	30	d = 2a

Requirements for concrete to be used in bridge structures, designed for the North conditions, according to the Codes of Practice of the USSR

Material	Material properties	Requirements for properties of materials to be used in structures	
		reinforced concrete	concrete
Concrete	Strength quality	200-300 foundation,unprestressed piles 300-400 prestressed structures, piers in the zone of variable water level 400 superstructures of long span bridges, shells	150
	Frost resistance quality	300	300-400 for structures in the zone of variable water level and protective layer 200-in the other cases
	Use of chemical additives	Use is obligatory at Frost resist. 300	